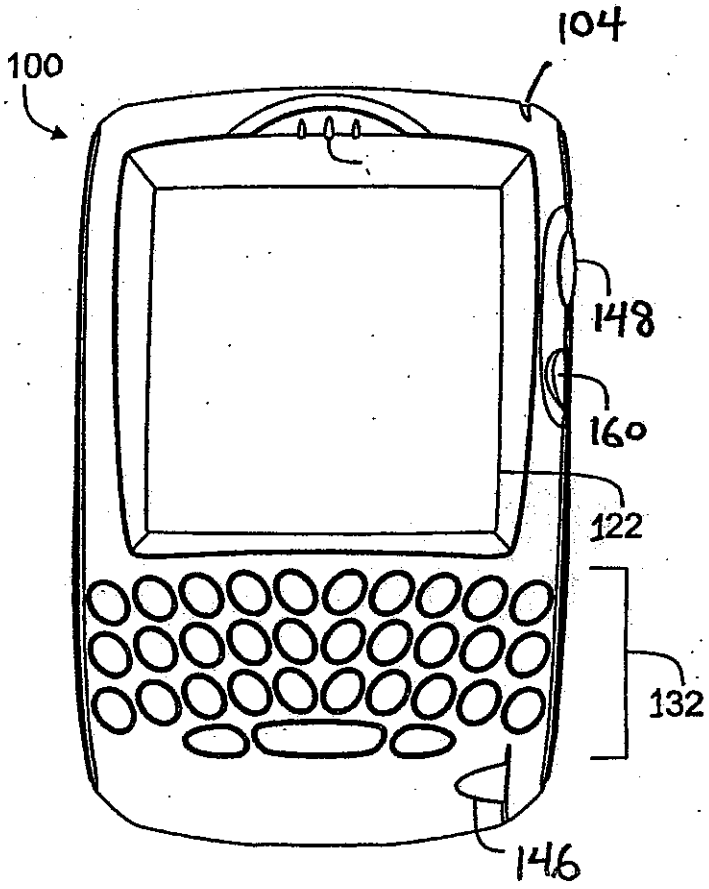

FIG. 1

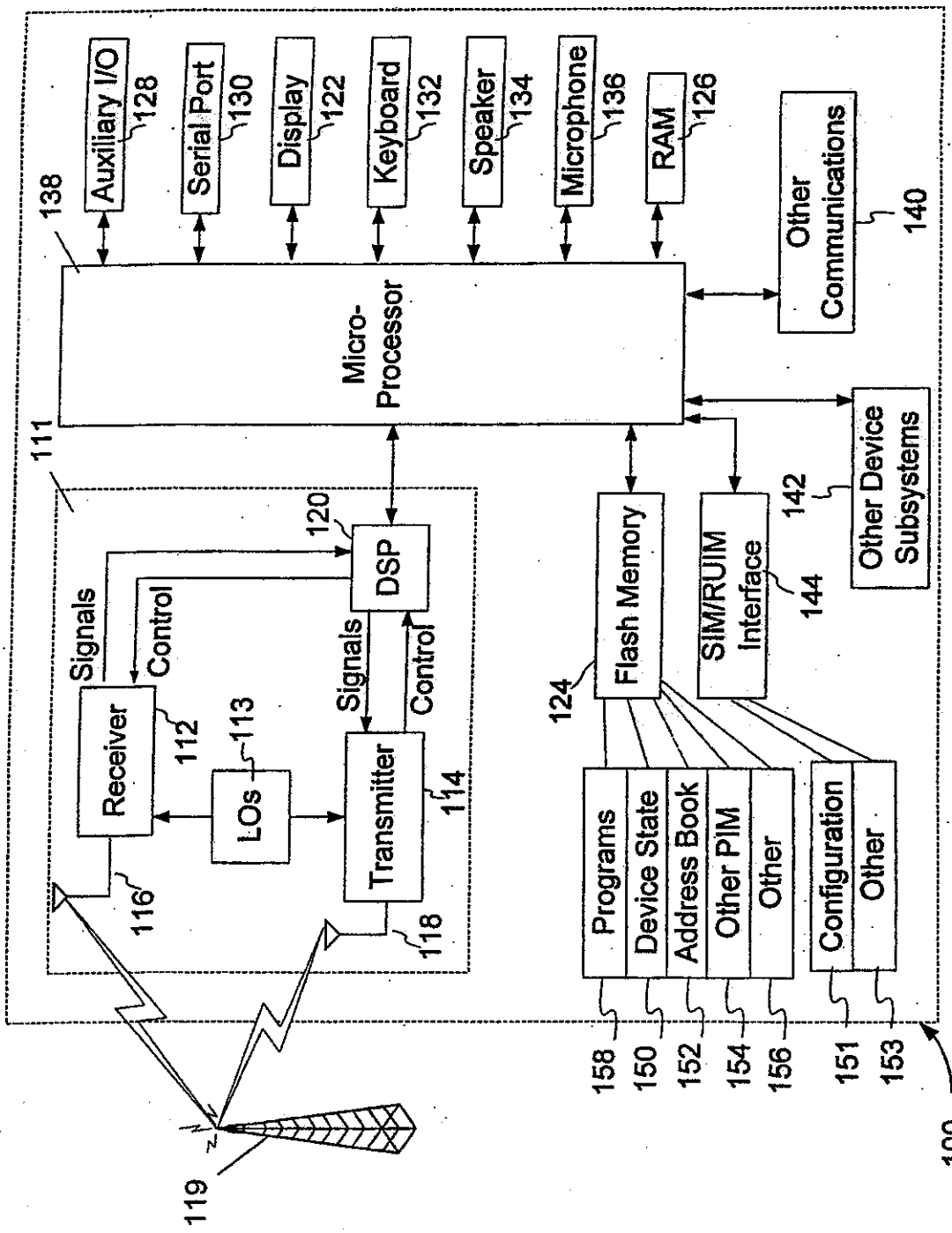
Auxiliary I/O
128
Serial Port
130
Display
122
Keyboard
132
Speaker
134
Microphone
136
RAM
126
138
Other Communications
140
Micro-Processor
111
Other Device Subsystems
142
SIM/RUIM Interface
144
Flash Memory
124
120
DSP
Signals
Control
Signals
Control
Receiver
112
113
LOs
Transmitter
114
116
118
Programs
Device State
Address Book
Other PIM
Other
Configuration
Other
158
150
152
154
156
151
153
100
119

FIG. 2

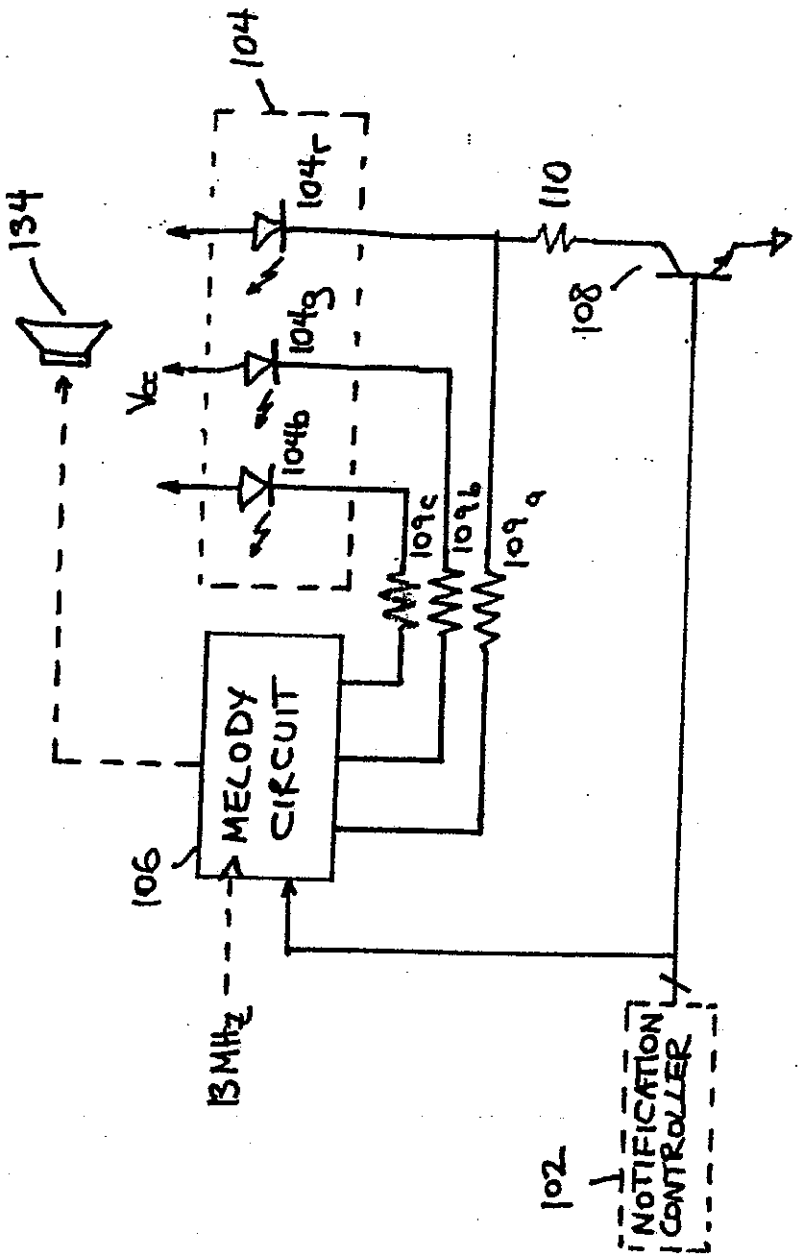
104
134
104r
104g
104b
Vcc
110
108
109c
109b
109a
MELODY CIRCUIT
106
13MHz
102
NOTIFICATION CONTROLLER

FIG. 3

H2