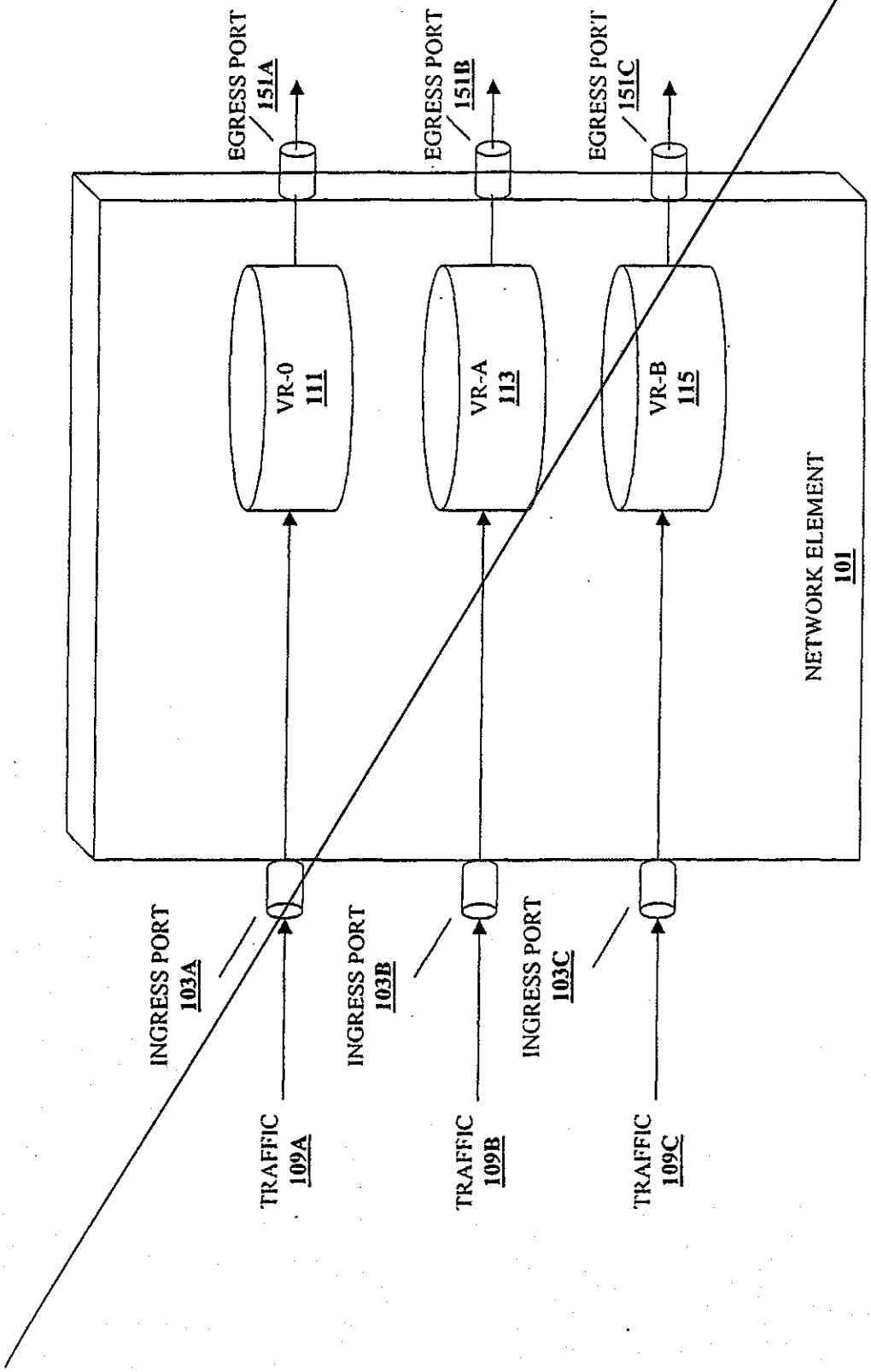

FIG. 1 (PRIOR ART)

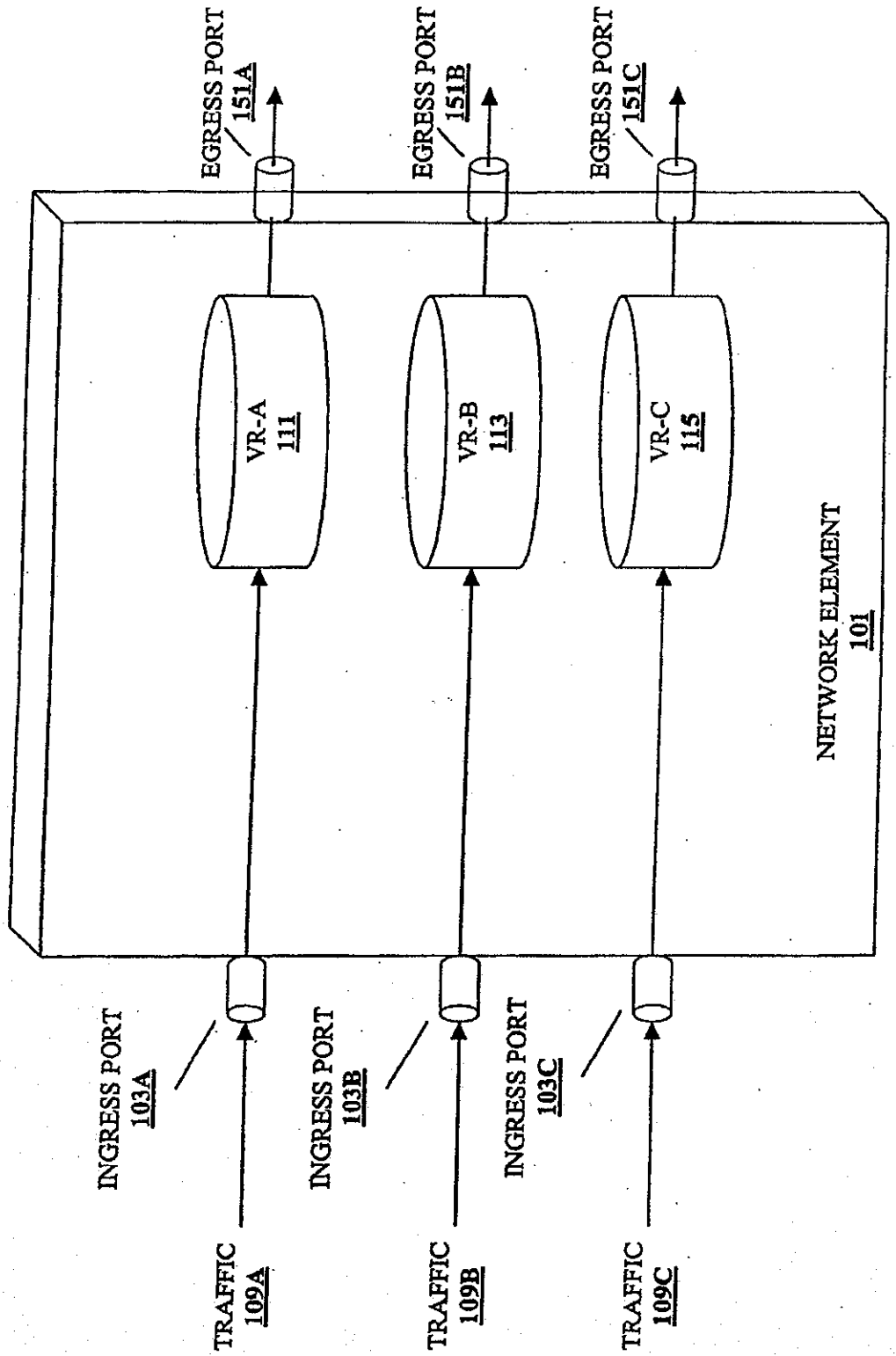

FIG. 1 (PRIOR ART)

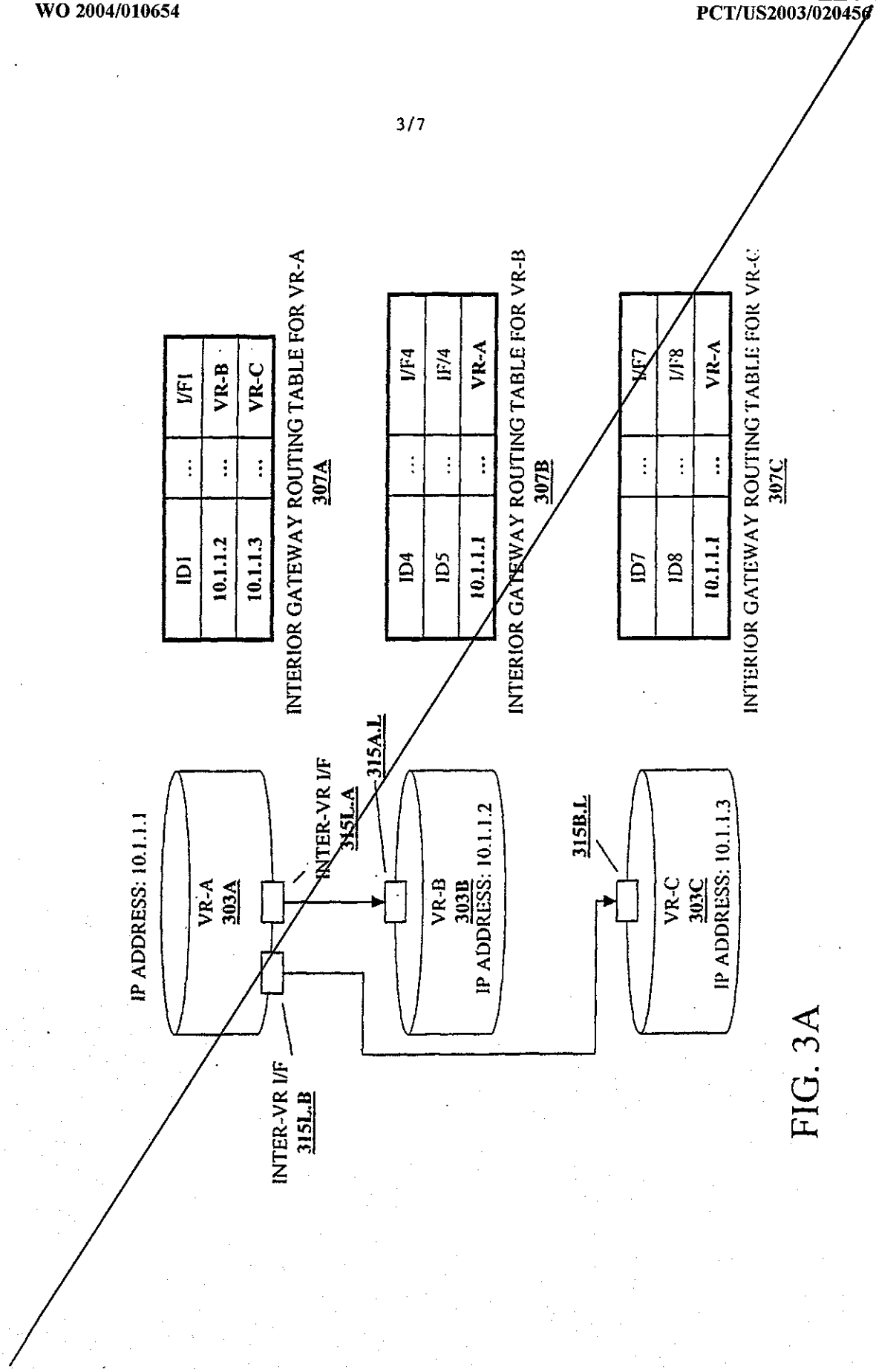
INTERIOR GATEWAY ROUTING TABLE FOR VR-A
307A
ID1 | ... | I/F1
10.1.1.2 | ... | VR-B
10.1.1.3 | ... | VR-C
INTERIOR GATEWAY ROUTING TABLE FOR VR-B
307B
ID4 | ... | I/F4
ID5 | ... | I/F4
10.1.1.1 | ... | VR-A
INTERIOR GATEWAY ROUTING TABLE FOR VR-C
307C
ID7 | ... | I/F7
ID8 | ... | I/F8
10.1.1.1 | ... | VR-A
IP ADDRESS: 10.1.1.1
VR-A
303A
INTER-VR I/F
315L.A
315A.L
VR-B
303B
IP ADDRESS: 10.1.1.2
315B.L
VR-C
303C
IP ADDRESS: 10.1.1.3
INTER-VR I/F
315L.B

FIG. 3A

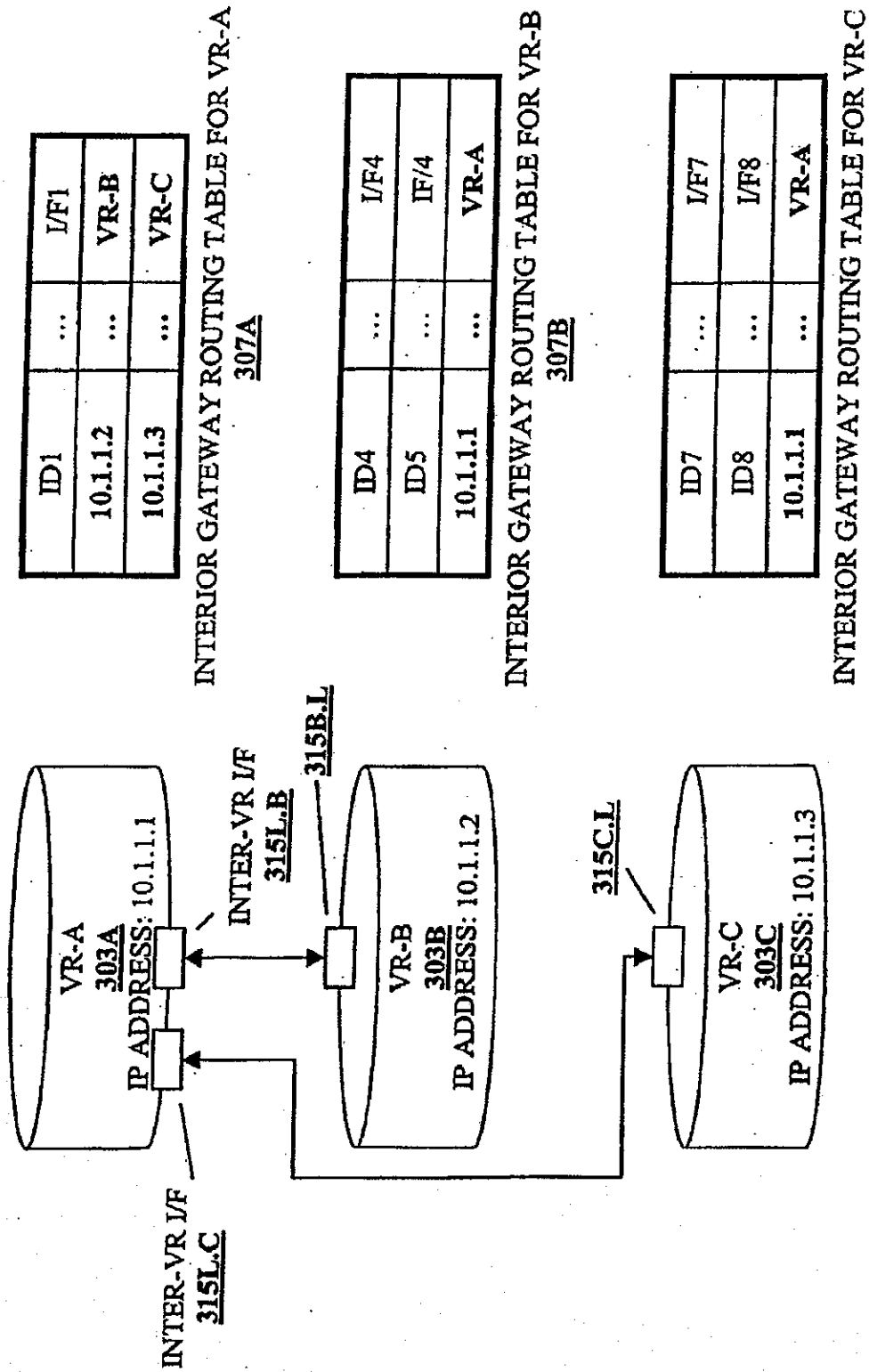
INTERIOR GATEWAY ROUTING TABLE FOR VR-A
307A
ID1 | ... | I/F1
10.1.1.2 | ... | VR-B
10.1.1.3 | ... | VR-C
INTERIOR GATEWAY ROUTING TABLE FOR VR-B
307B
ID4 | ... | I/F4
ID5 | ... | IF/4
10.1.1.1 | ... | VR-A
INTERIOR GATEWAY ROUTING TABLE FOR VR-C
307C
ID7 | ... | I/F7
ID8 | ... | I/F8
10.1.1.1 | ... | VR-A
VR-A
303A
IP ADDRESS: 10.1.1.1
VR-B
303B
IP ADDRESS: 10.1.1.2
VR-C
303C
IP ADDRESS: 10.1.1.3
INTER-VR I/F
315L.B
315B.L
315C.L
INTER-VR I/F
315L.C

FIG. 3A

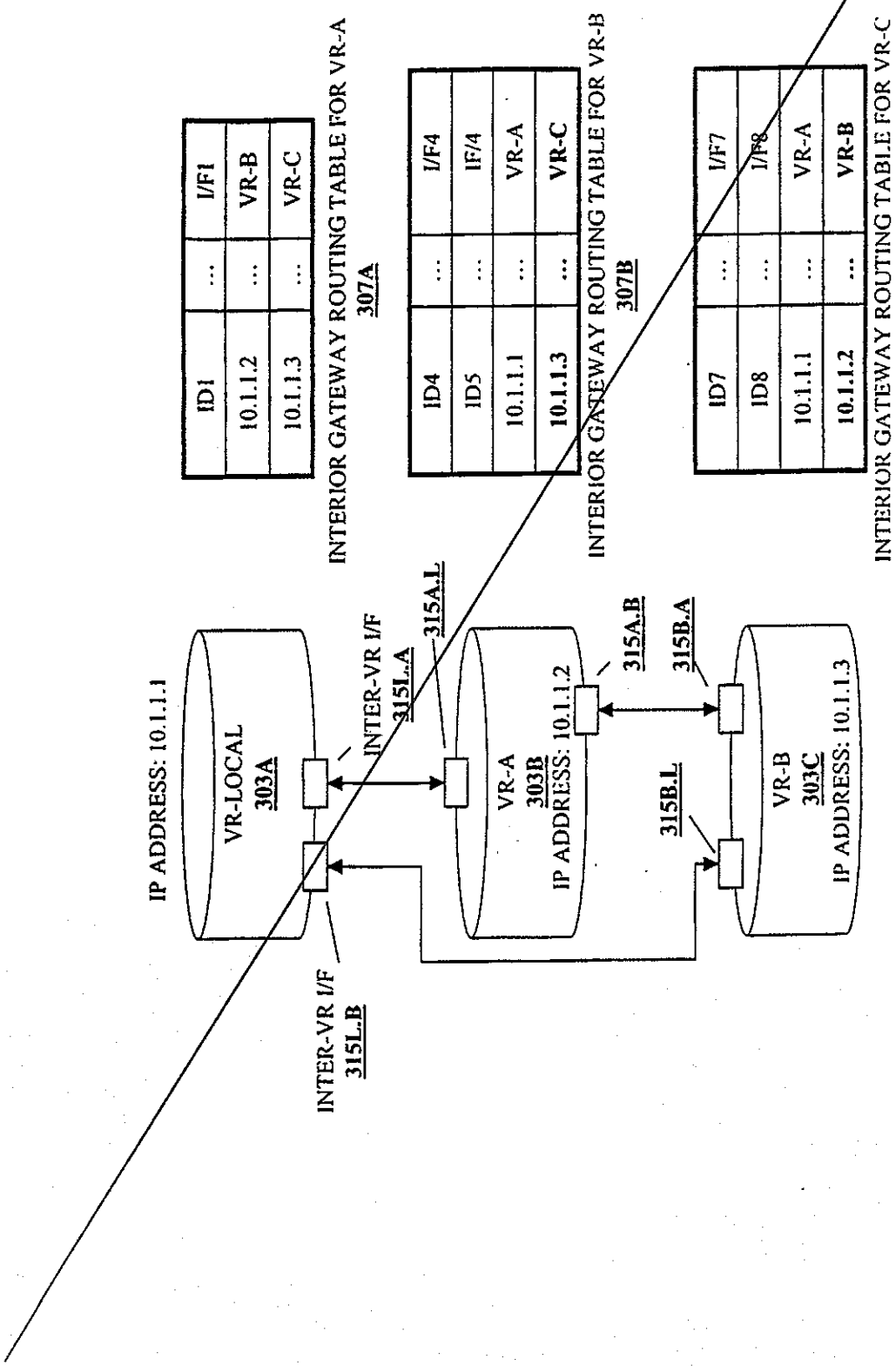
ID1 ... I/F1
10.1.1.2 ... VR-B
10.1.1.3 ... VR-C
INTERIOR GATEWAY ROUTING TABLE FOR VR-A
307A
ID4 ... I/F4
ID5 ... IF/4
10.1.1.1 ... VR-A
10.1.1.3 ... VR-C
INTERIOR GATEWAY ROUTING TABLE FOR VR-B
307B
ID7 ... I/F7
ID8 ... I/F8
10.1.1.1 ... VR-A
10.1.1.2 ... VR-B
INTERIOR GATEWAY ROUTING TABLE FOR VR-C
307C
IP ADDRESS: 10.1.1.1
VR-LOCAL
303A
INTER-VR I/F
315L.A
315A.L
VR-A
303B
IP ADDRESS: 10.1.1.2
315A.B
315B.A
VR-B
303C
IP ADDRESS: 10.1.1.3
315B.L
INTER-VR I/F
315L.B

FIG. 3B

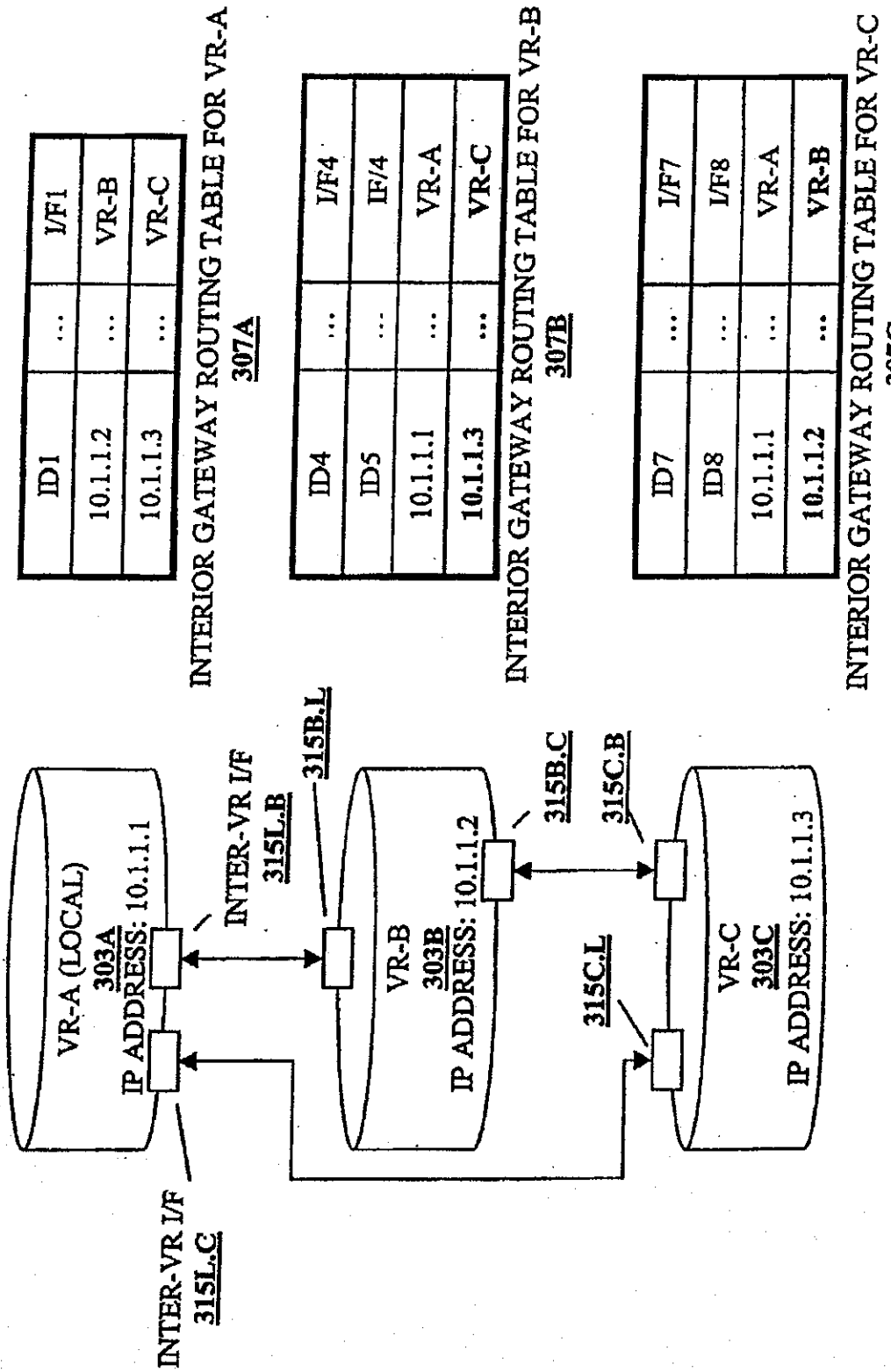
INTERIOR GATEWAY ROUTING TABLE FOR VR-A
307A
ID1 | ... | I/F1
10.1.1.2 | ... | VR-B
10.1.1.3 | ... | VR-C
INTERIOR GATEWAY ROUTING TABLE FOR VR-B
307B
ID4 | ... | I/F4
ID5 | ... | IF/4
10.1.1.1 | ... | VR-A
10.1.1.3 | ... | VR-C
INTERIOR GATEWAY ROUTING TABLE FOR VR-C
307C
ID7 | ... | I/F7
ID8 | ... | I/F8
10.1.1.1 | ... | VR-A
10.1.1.2 | ... | VR-B
VR-A (LOCAL)
303A
IP ADDRESS: 10.1.1.1
VR-B
303B
IP ADDRESS: 10.1.1.2
VR-C
303C
IP ADDRESS: 10.1.1.3
INTER-VR I/F
315L.B
315B.L
315B.C
315C.B
315C.L
INTER-VR I/F
315L.C

FIG. 3B

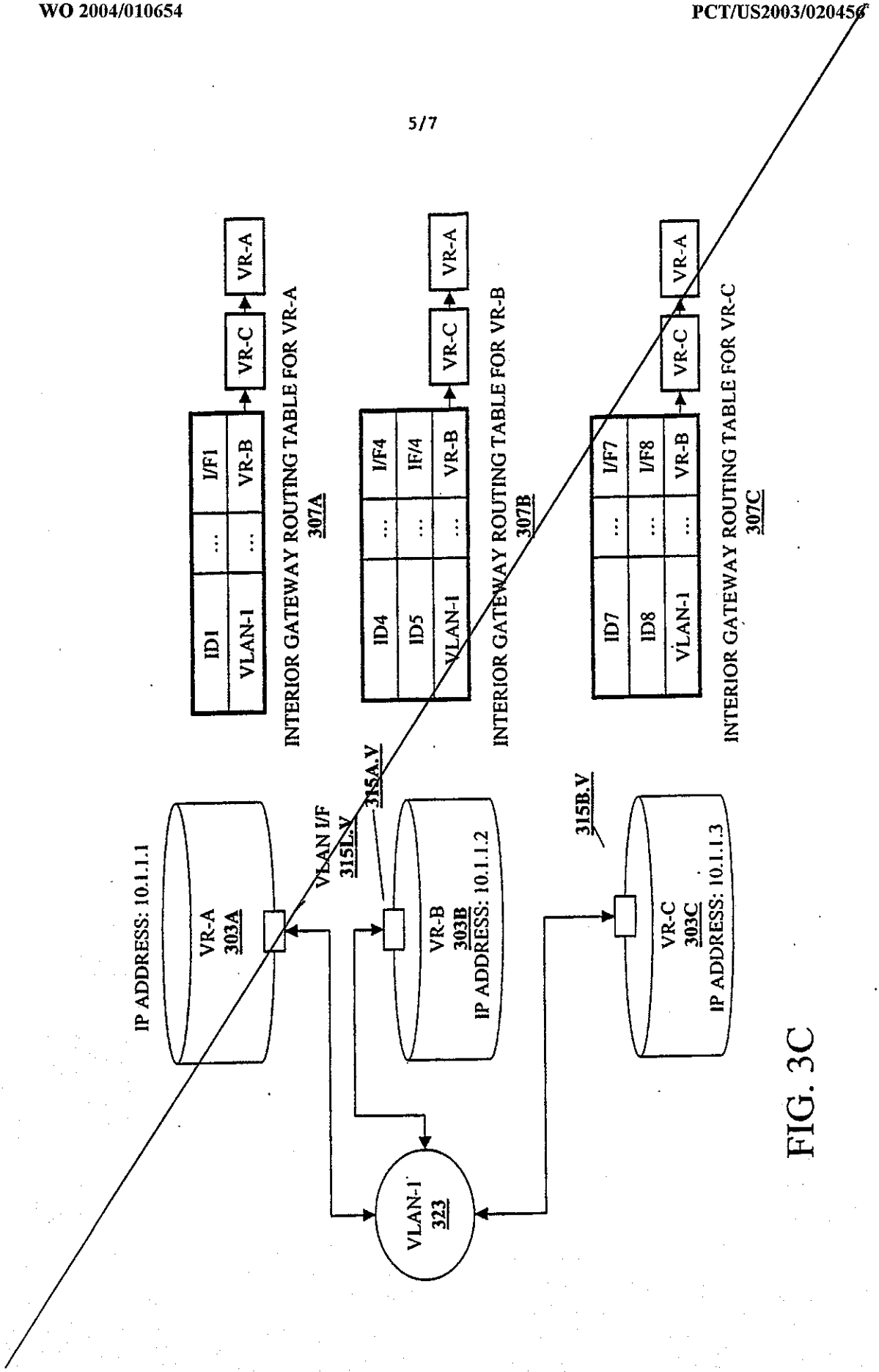
INTERIOR GATEWAY ROUTING TABLE FOR VR-A
307A
ID1
VLAN-1
I/F1
VR-B
VR-C
VR-A
INTERIOR GATEWAY ROUTING TABLE FOR VR-B
307B
ID4
ID5
VLAN-1
I/F4
IF/4
VR-B
VR-C
VR-A
INTERIOR GATEWAY ROUTING TABLE FOR VR-C
307C
ID7
ID8
VLAN-1
I/F7
I/F8
VR-B
VR-C
VR-A
IP ADDRESS: 10.1.1.1
VR-A
303A
VLAN I/F
315L.V
315A.V
VR-B
303B
IP ADDRESS: 10.1.1.2
315B.V
VR-C
303C
IP ADDRESS: 10.1.1.3
VLAN-1
323

FIG. 3C

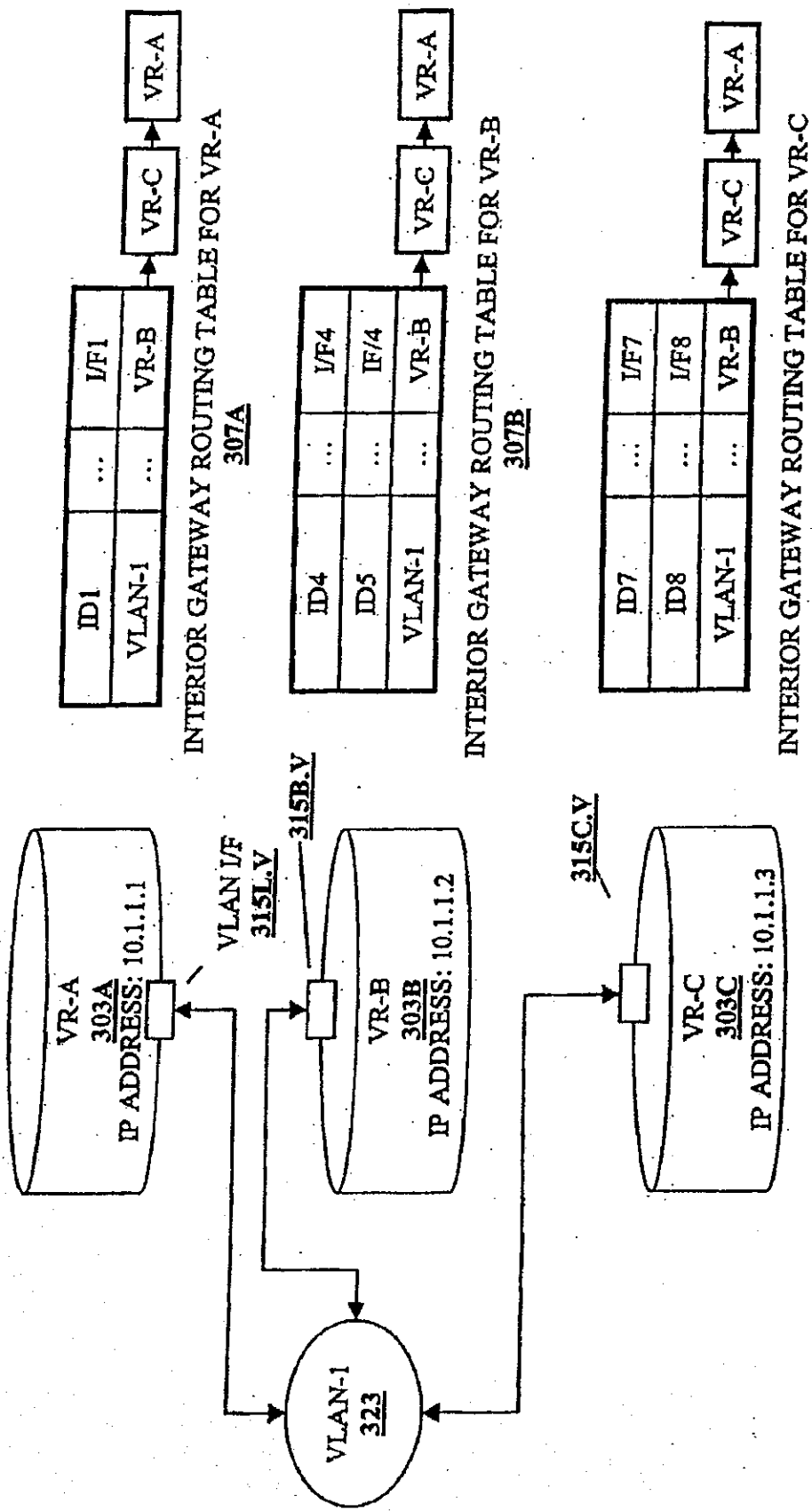
INTERIOR GATEWAY ROUTING TABLE FOR VR-A
307A
ID1
VLAN-1
...
...
I/F1
VR-B
VR-C
VR-A
INTERIOR GATEWAY ROUTING TABLE FOR VR-B
307B
ID4
ID5
VLAN-1
...
...
I/F4
IF/4
VR-B
VR-C
VR-A
INTERIOR GATEWAY ROUTING TABLE FOR VR-C
307C
ID7
ID8
VLAN-1
...
...
I/F7
I/F8
VR-B
VR-C
VR-A
VR-A
303A
IP ADDRESS: 10.1.1.1
VR-B
303B
IP ADDRESS: 10.1.1.2
VR-C
303C
IP ADDRESS: 10.1.1.3
VLAN I/F
315L.V
315B.V
315C.V
VLAN-1
323

FIG. 3C

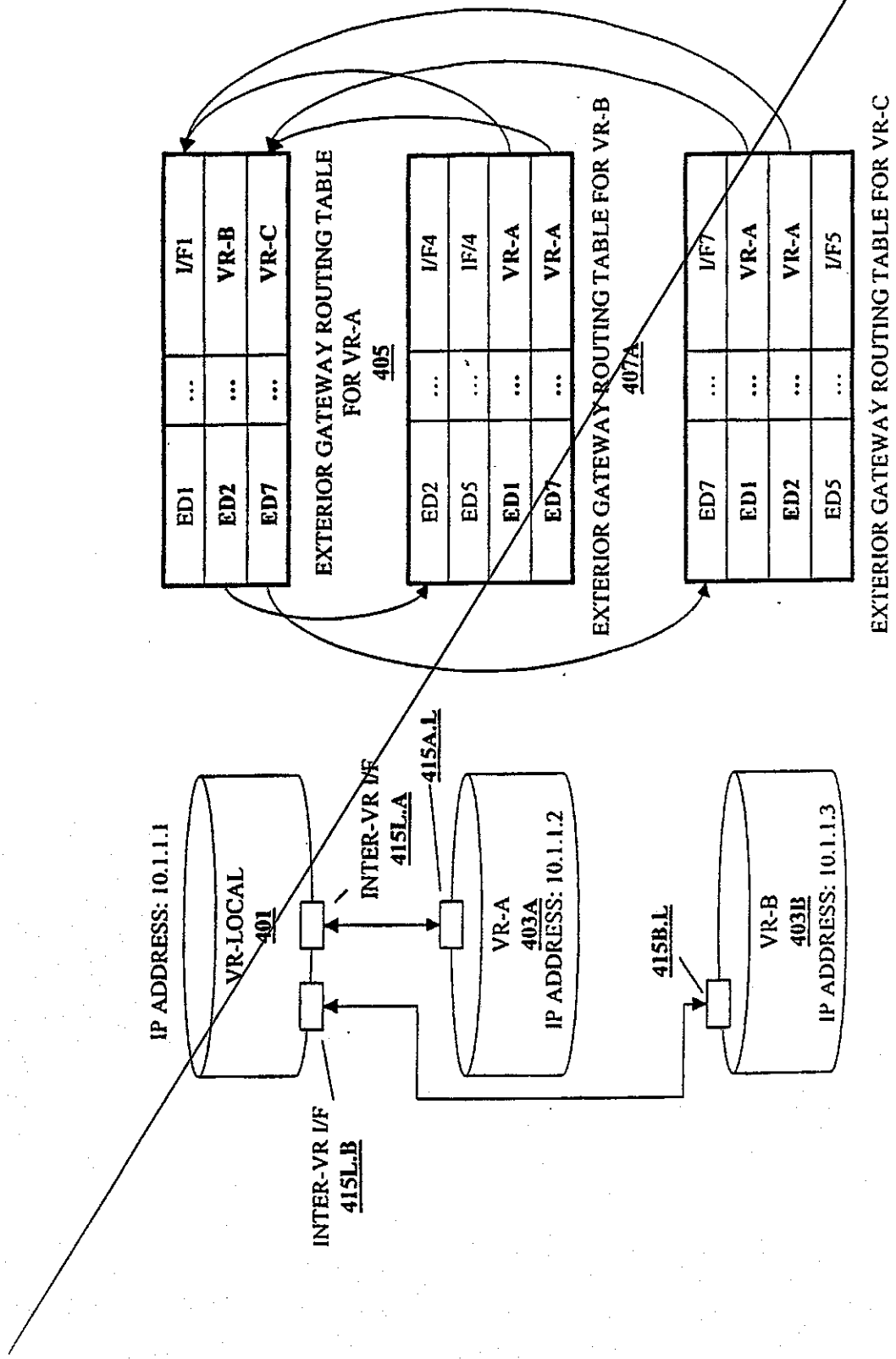
EXTERIOR GATEWAY ROUTING TABLE FOR VR-A
405
ED1 ... I/F1
ED2 ... VR-B
ED7 ... VR-C
EXTERIOR GATEWAY ROUTING TABLE FOR VR-B
407A
ED2 ... I/F4
ED5 ... I/F4
ED1 ... VR-A
ED7 ... VR-A
EXTERIOR GATEWAY ROUTING TABLE FOR VR-C
407B
ED7 ... I/F7
ED1 ... VR-A
ED2 ... VR-A
ED5 ... I/F5
IP ADDRESS: 10.1.1.1
VR-LOCAL
401
INTER-VR I/F
415L.A
415A.L
VR-A
403A
IP ADDRESS: 10.1.1.2
415B.L
VR-B
403B
IP ADDRESS: 10.1.1.3
INTER-VR I/F
415L.B

FIG. 4

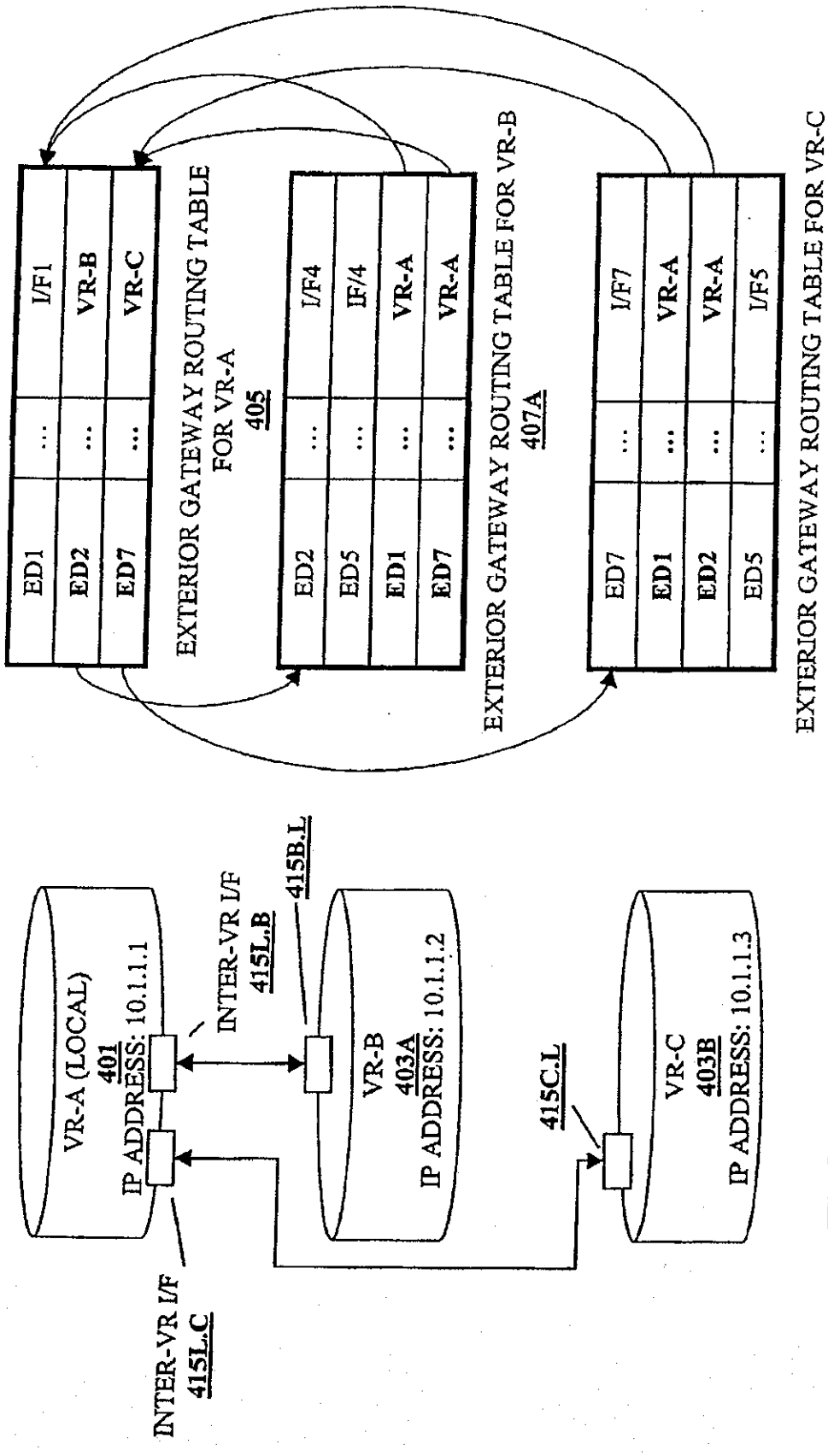
EXTERIOR GATEWAY ROUTING TABLE FOR VR-A
405
ED1 | ... | I/F1
ED2 | ... | VR-B
ED7 | ... | VR-C
EXTERIOR GATEWAY ROUTING TABLE FOR VR-B
407A
ED2 | ... | I/F4
ED5 | ... | IF/4
ED1 | ... | VR-A
ED7 | ... | VR-A
EXTERIOR GATEWAY ROUTING TABLE FOR VR-C
407B
ED7 | ... | I/F7
ED1 | ... | VR-A
ED2 | ... | VR-A
ED5 | ... | I/F5
VR-A (LOCAL)
401
IP ADDRESS: 10.1.1.1
INTER-VR I/F
415L.B
415B.L
VR-B
403A
IP ADDRESS: 10.1.1.2
415C.L
VR-C
403B
IP ADDRESS: 10.1.1.3
INTER-VR I/F
415L.C

FIG. 4

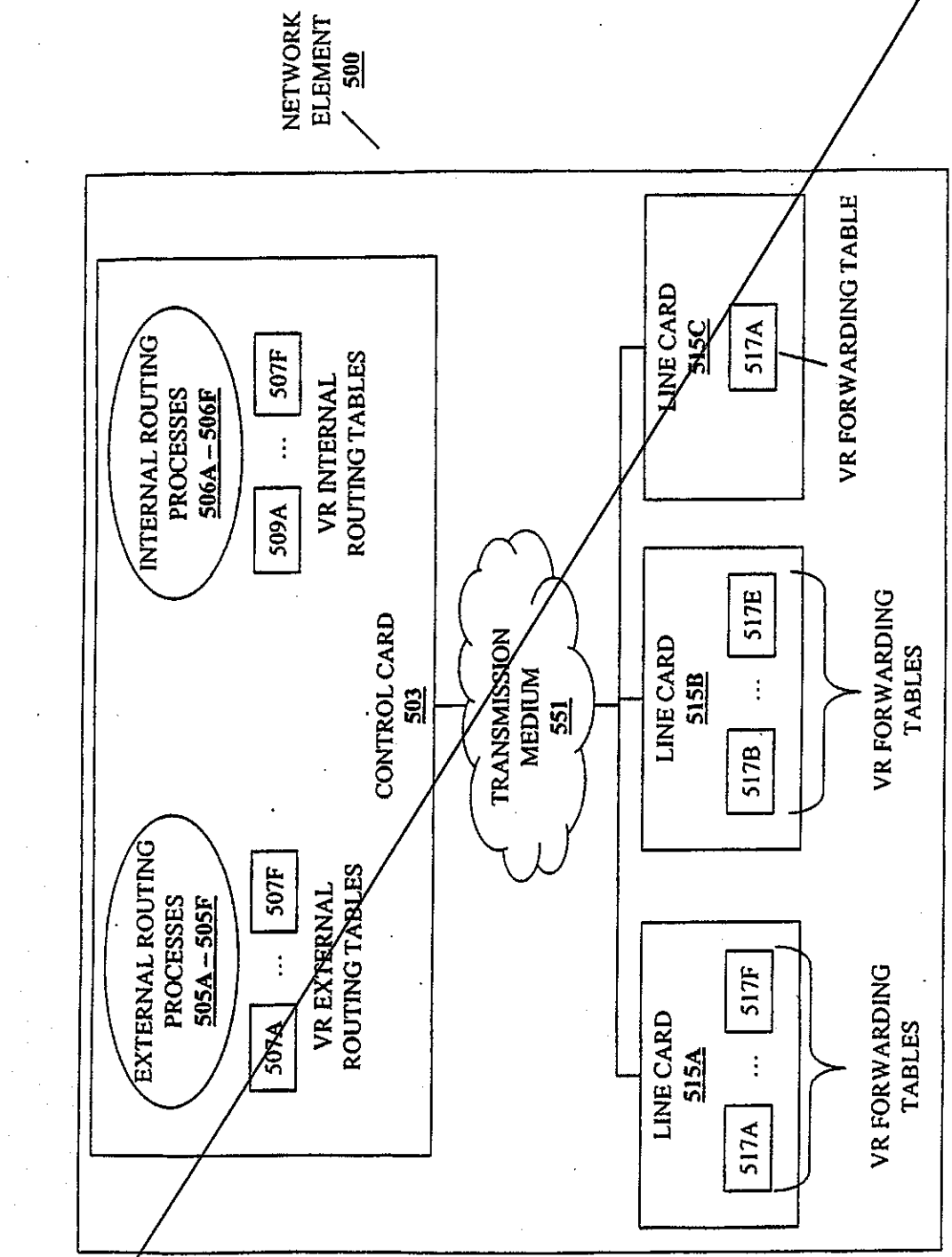
NETWORK ELEMENT 500
EXTERNAL ROUTING PROCESSES 505A – 505F
INTERNAL ROUTING PROCESSES 506A – 506F
507A
507F
509A
507F
VR EXTERNAL ROUTING TABLES
VR INTERNAL ROUTING TABLES
CONTROL CARD 503
TRANSMISSION MEDIUM 551
LINE CARD 515A
LINE CARD 515B
LINE CARD 515C
517A
517F
517B
517E
517A
VR FORWARDING TABLES
VR FORWARDING TABLES
VR FORWARDING TABLE

FIG. 5

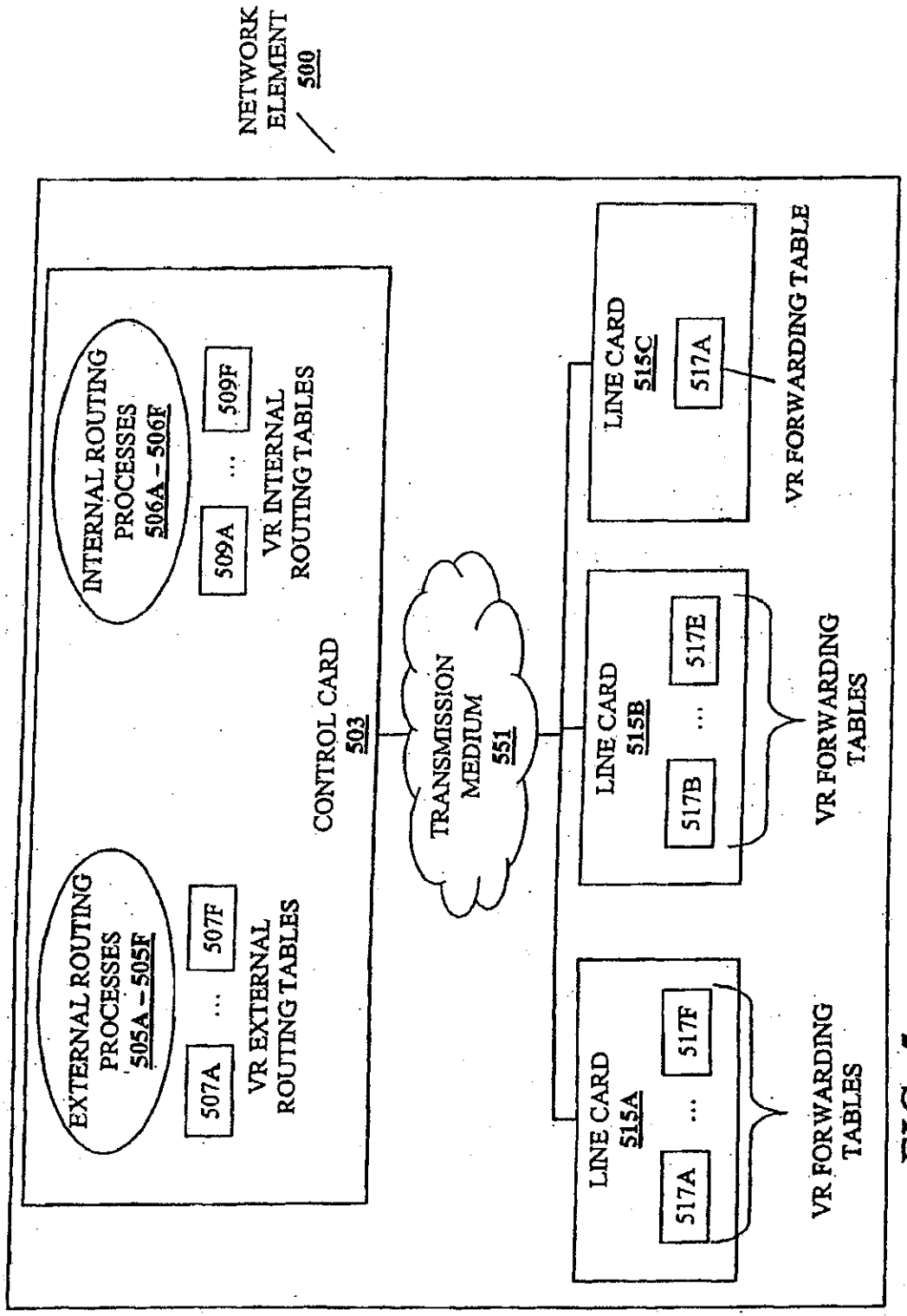
NETWORK ELEMENT 500
EXTERNAL ROUTING PROCESSES 505A – 505F
INTERNAL ROUTING PROCESSES 506A – 506F
507A
507F
VR EXTERNAL ROUTING TABLES
509A
509F
VR INTERNAL ROUTING TABLES
CONTROL CARD 503
TRANSMISSION MEDIUM 551
LINE CARD 515A
517A
517F
VR FORWARDING TABLES
LINE CARD 515B
517B
517E
VR FORWARDING TABLES
LINE CARD 515C
517A
VR FORWARDING TABLE

FIG. 5