(12) INTERNATIONAL APPLICATION PUBLISHED UNDER THE PATENT COOPERATION TREATY (PCT)

(19) World Intellectual Property Organization
International Bureau

(43) International Publication Date
19 December 2002 (19.12.2002)

PCT

(10) International Publication Number
WO 02/101882 A3

(51) International Patent Classification[7]: H01R 12/18, 23/68, 13/658

(21) International Application Number: PCT/US02/18816

(22) International Filing Date: 13 June 2002 (13.06.2002)

(25) Filing Language: English

(26) Publication Language: English

(30) Priority Data:
60/297,998 13 June 2001 (13.06.2001) US

(71) Applicant: **MOLEX INCORPORATED** [US/US]; 2222 Wellington Court, Lisle, IL 60532 (US).

(72) Inventors: **ZADEREJ, VICTOR**; 35W822 Park Lane, sT. CHarles, IL 60175 (US). **STILES, Kenneth, M.**; 165 Fox Hunt Trail, Barrington, IL 60010 (US). **REGNIER, Kent, E.**; 541 S. Grace Street, LaGrange, IL 60525 (US).

(74) Agent: **PAULIUS, Thomas, D.**; Molex Incorporated, 2222 Wellington Court, Lisle, IL 60532 (US).

(81) Designated States *(national)*: AE, AG, AL, AM, AT, AU, AZ, BA, BB, BG, BR, BY, BZ, CA, CH, CN, CO, CR, CU, CZ, DE, DK, DM, DZ, EC, EE, ES, FI, GB, GD, GE, GH, GM, HR, HU, ID, IL, IN, IS, JP, KE, KG, KP, KR, KZ, LC, LK, LR, LS, LT, LU, LV, MA, MD, MG, MK, MN, MW, MX, MZ, NO, NZ, OM, PH, PL, PT, RO, RU, SD, SE, SG, SI, SK, SL, TJ, TM, TN, TR, TT, TZ, UA, UG, UZ, VN, YU, ZA, ZM, ZW.

(84) Designated States *(regional)*: ARIPO patent (GH, GM, KE, LS, MW, MZ, SD, SL, SZ, TZ, UG, ZM, ZW), Eurasian patent (AM, AZ, BY, KG, KZ, MD, RU, TJ, TM), European patent (AT, BE, CH, CY, DE, DK, ES, FI, FR, GB, GR, IE, IT, LU, MC, NL, PT, SE, TR), OAPI patent (BF, BJ, CF, CG, CI, CM, GA, GN, GQ, GW, ML, MR, NE, SN, TD, TG).

Published:
— *with international search report*
— *before the expiration of the time limit for amending the claims and to be republished in the event of receipt of amendments*

[Continued on next page]

(54) Title: HIGH-SPEED MEZZANINE CONNECTOR

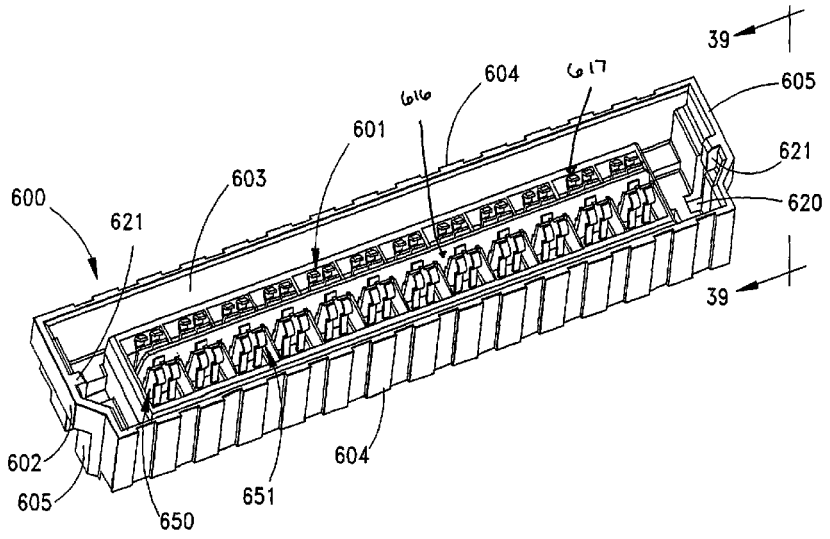

(57) Abstract: A board to board connector for use in high speed signal transmission applications includes male and female connector components that interengage with each other. Each of the male and female parts has an insulative housing that holds a plurality of individual terminal assemblies in cavities defined by corresponding walls of each connector compenent. The exterior surfaces of the connector components are plated with a metal so as to provide a unitary grounding datum around each of the individual terminal assemblies. Each of the connector components may utilize a center engagement member that runs lengthwise through the connector components, one of the center engagement members having a contact blade formed integrally therewith and the other of the center engagement members including a plurality of spring arms, also integrally formed with the connector component so that the grounding shield portions of the two connectors make contact with each other first before the terminals of the connector make contact.

WO 02/101882 A3

(88) Date of publication of the international search report:
27 February 2003

For two-letter codes and other abbreviations, refer to the "Guidance Notes on Codes and Abbreviations" appearing at the beginning of each regular issue of the PCT Gazette.