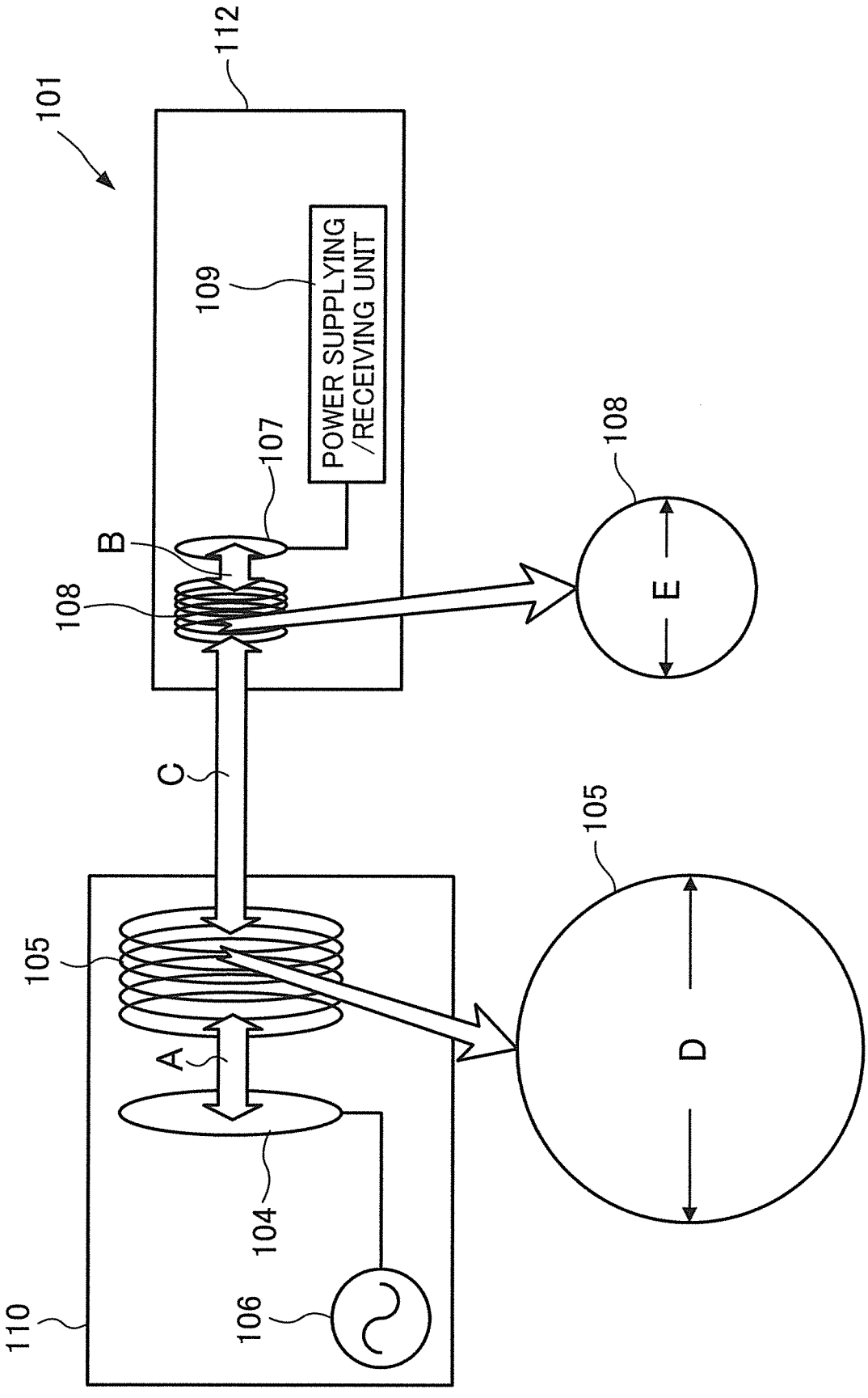
101
112
109
POWER SUPPLYING /RECEIVING UNIT
107
108
B
108
E
C
105
105
A
D
104
106
110

FIG.1

FIG.2

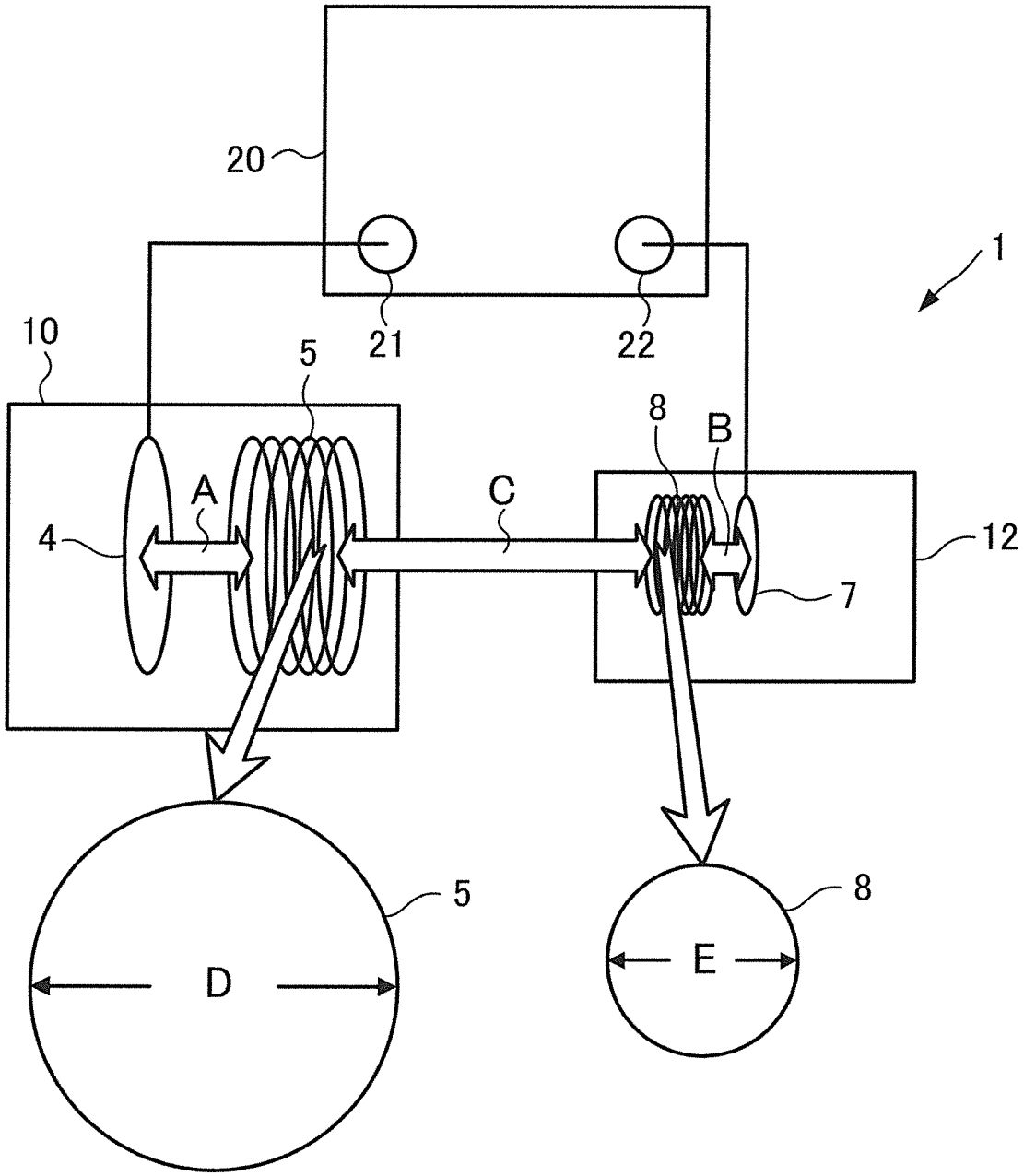

FIG.3

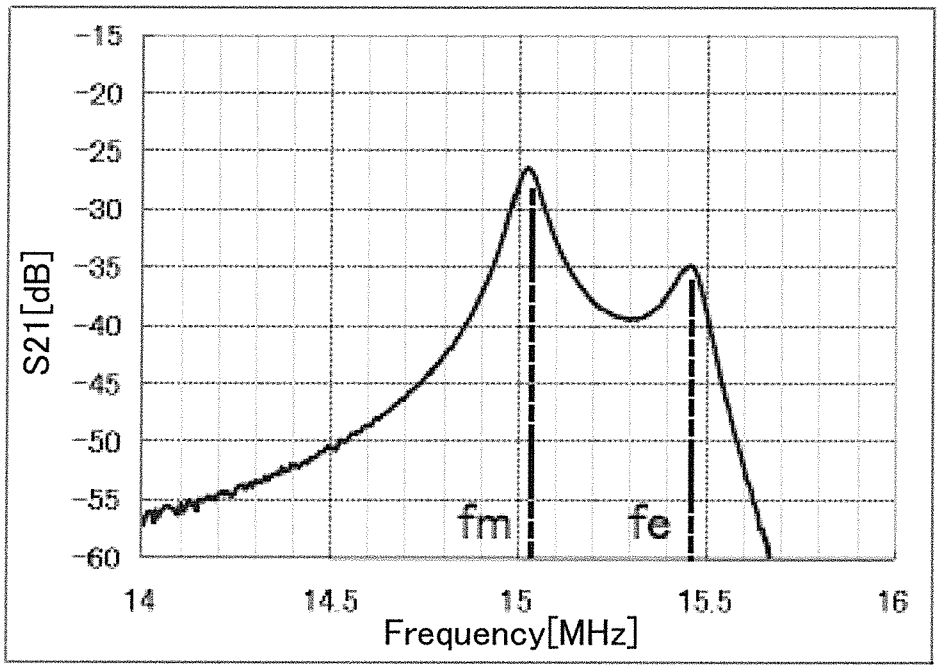
-15
-20
-25
-30
-35
-40
-45
-50
-55
-60
S21[dB]
fm
fe
14
14.5
15
15.5
16
Frequency[MHz]

FIG.4

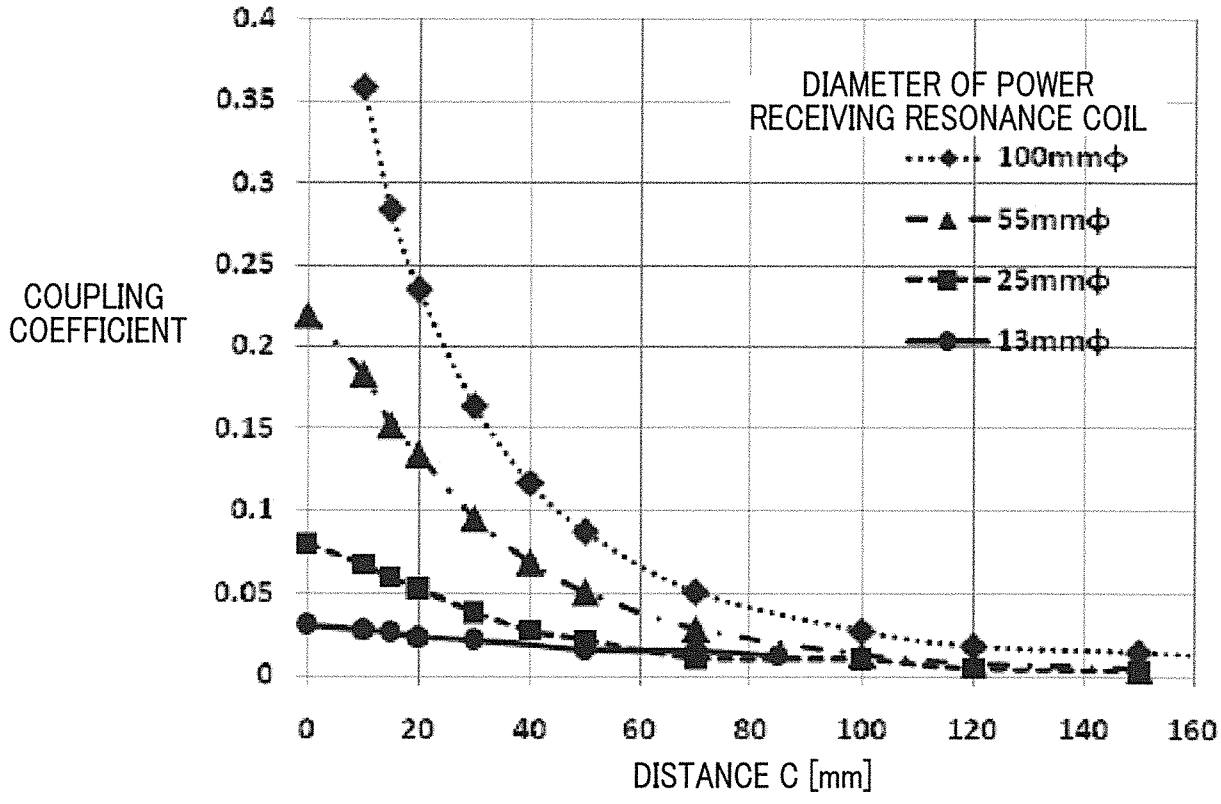
COUPLING COEFFICIENT
0.4
0.35
0.3
0.25
0.2
0.15
0.1
0.05
0
DIAMETER OF POWER RECEIVING RESONANCE COIL
100mmφ
55mmφ
25mmφ
13mmφ
0
20
40
60
80
100
120
140
160
DISTANCE C [mm]

FIG.5

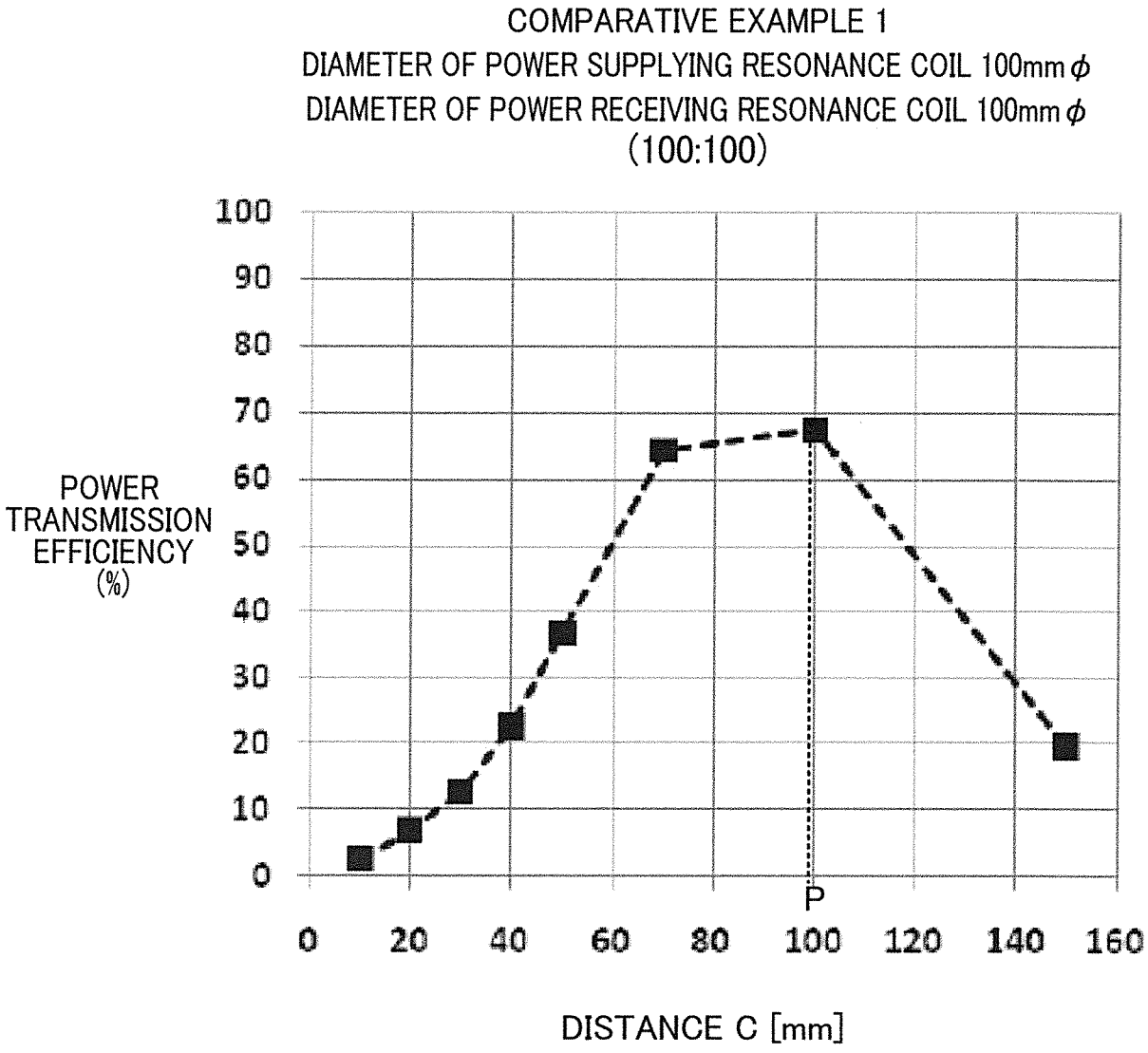
COMPARATIVE EXAMPLE 1
DIAMETER OF POWER SUPPLYING RESONANCE COIL 100mmϕ
DIAMETER OF POWER RECEIVING RESONANCE COIL 100mmϕ
(100:100)
POWER TRANSMISSION EFFICIENCY (%)
100
90
80
70
60
50
40
30
20
10
0
P
0
20
40
60
80
100
120
140
160
DISTANCE C [mm]

FIG.6

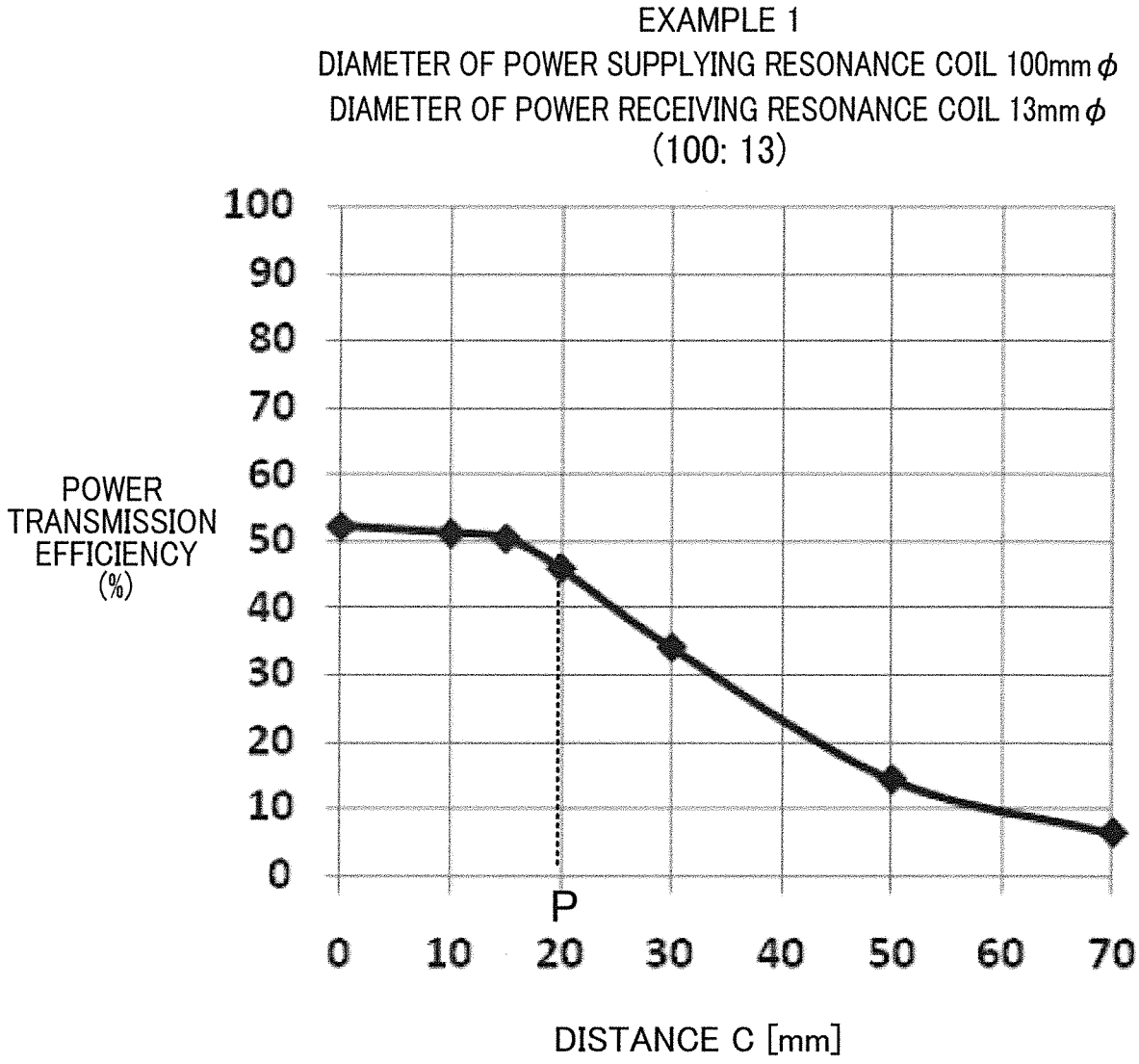
EXAMPLE 1
DIAMETER OF POWER SUPPLYING RESONANCE COIL 100mmϕ
DIAMETER OF POWER RECEIVING RESONANCE COIL 13mmϕ
(100: 13)
POWER TRANSMISSION EFFICIENCY (%)
100
90
80
70
60
50
40
30
20
10
0
P
0
10
20
30
40
50
60
70
DISTANCE C [mm]

FIG.7

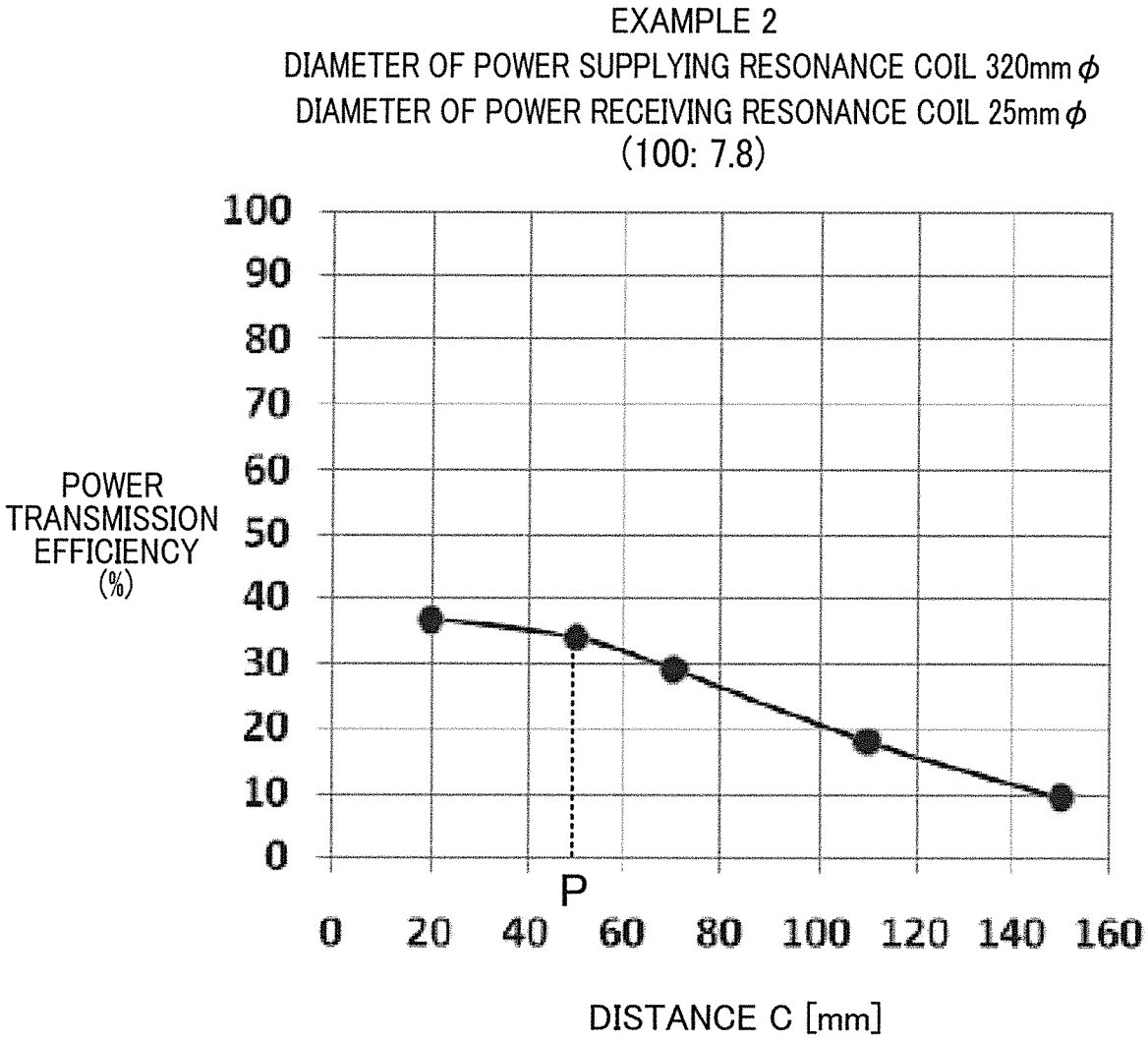
EXAMPLE 2
DIAMETER OF POWER SUPPLYING RESONANCE COIL 320mmϕ
DIAMETER OF POWER RECEIVING RESONANCE COIL 25mmϕ
(100: 7.8)
POWER TRANSMISSION EFFICIENCY (%)
100
90
80
70
60
50
40
30
20
10
0
P
0
20
40
60
80
100
120
140
160
DISTANCE C [mm]

FIG.8

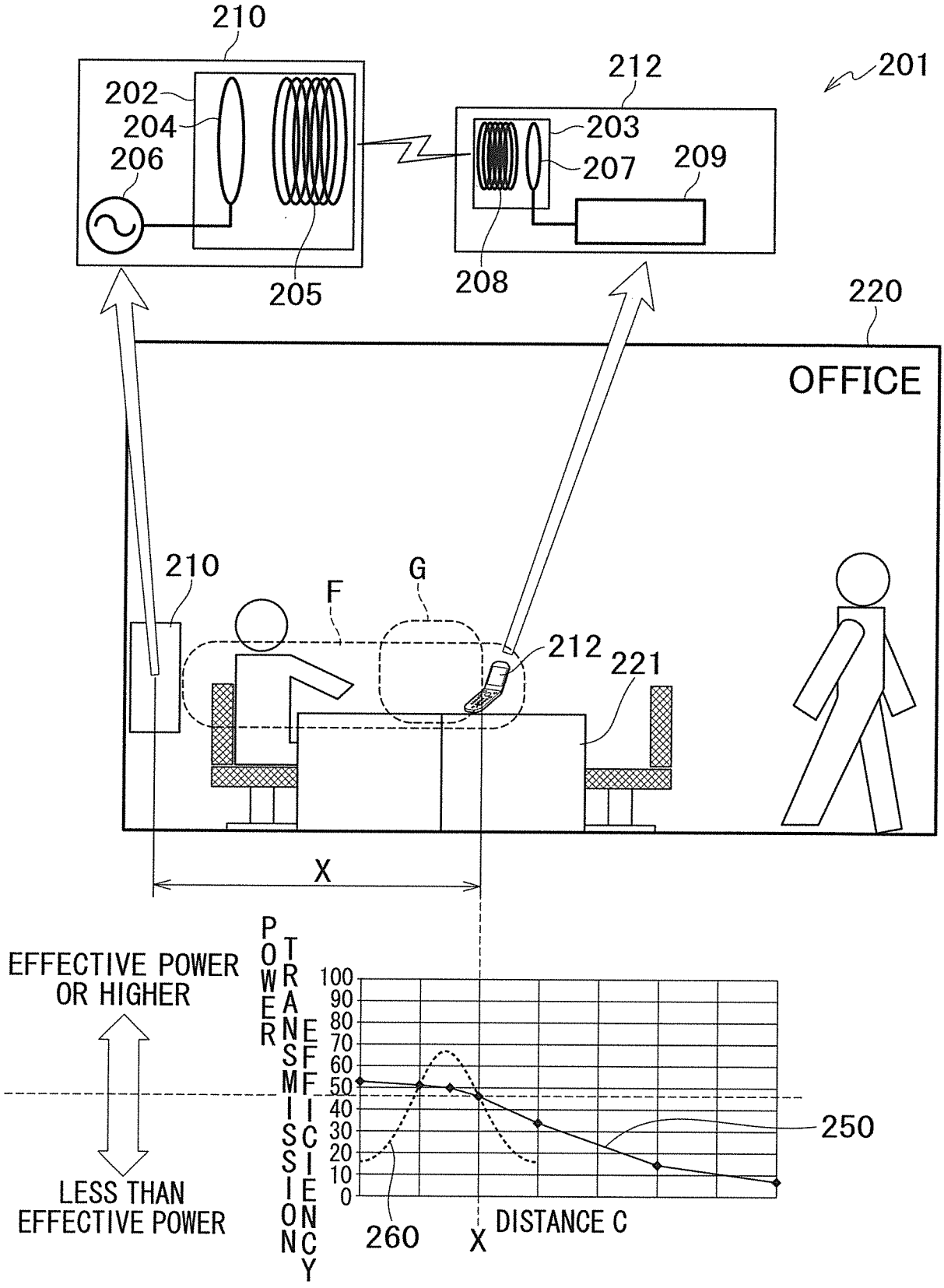
210
202
204
206
205
212
203
207
209
208
201
220
OFFICE
210
F
G
212
221
X
EFFECTIVE POWER OR HIGHER
LESS THAN EFFECTIVE POWER
POWER TRANSMISSION EFFICIENCY
100
90
80
70
60
50
40
30
20
10
0
250
260
X
DISTANCE C