REPLACEMENT SHEET
02 AUG 2005

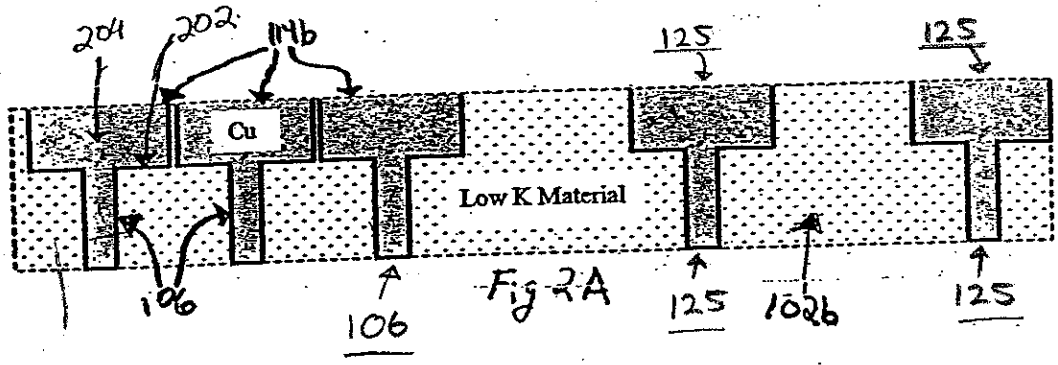

Fig. 2A

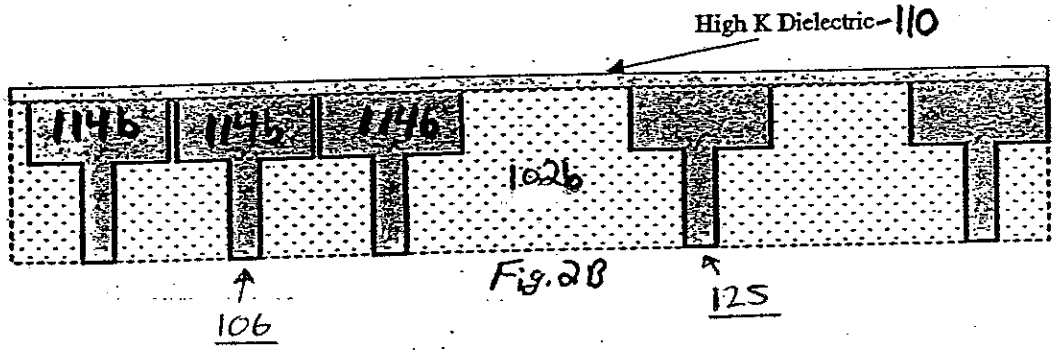

Fig. 2B

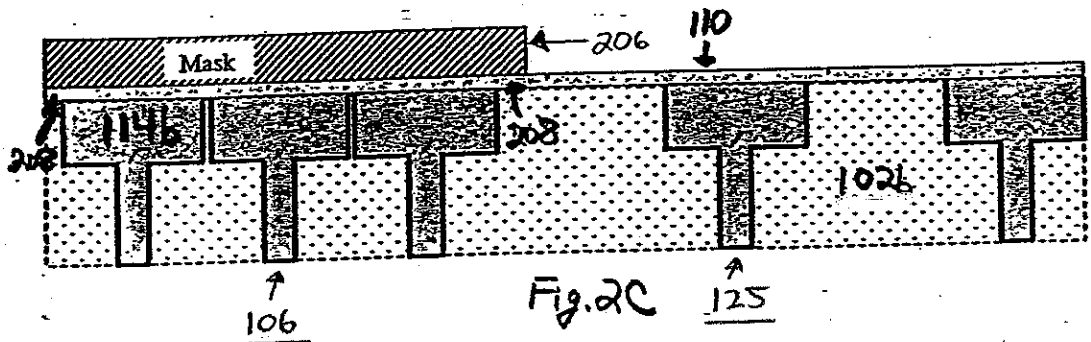

Fig. 2C

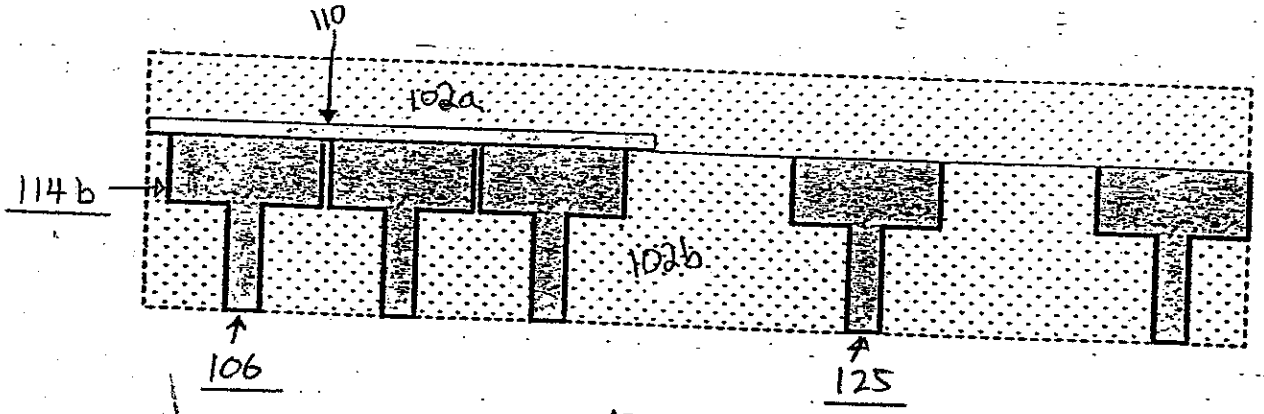

Fig. 2D

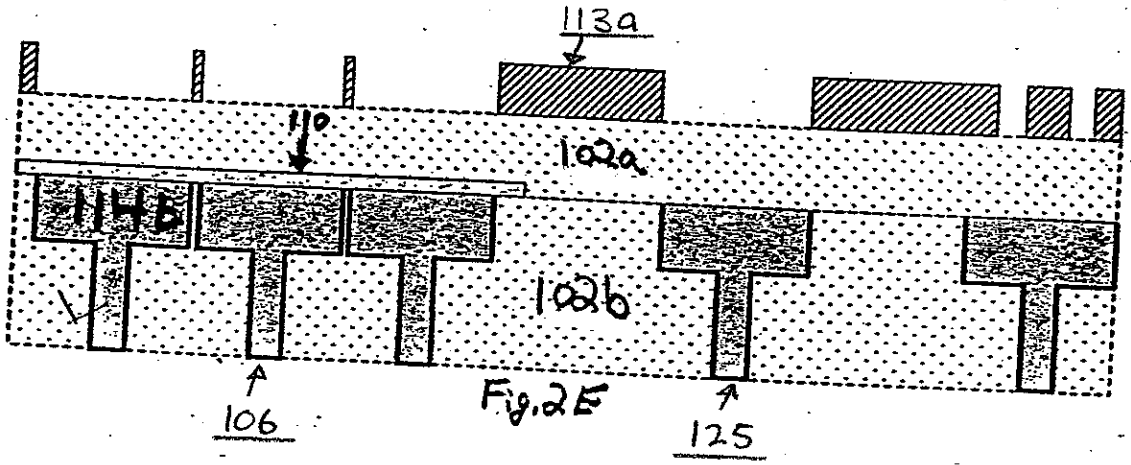

Fig. 2E

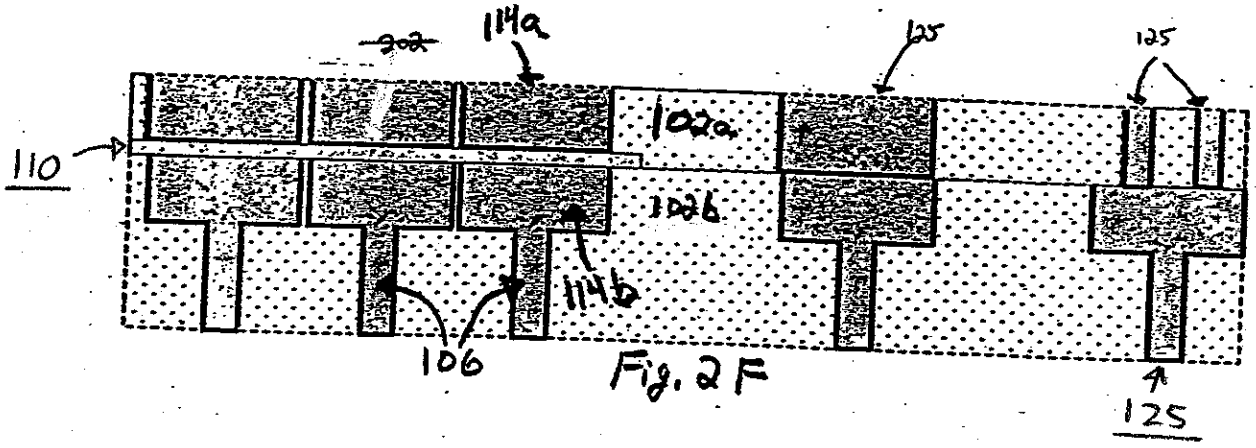

Fig. 2F

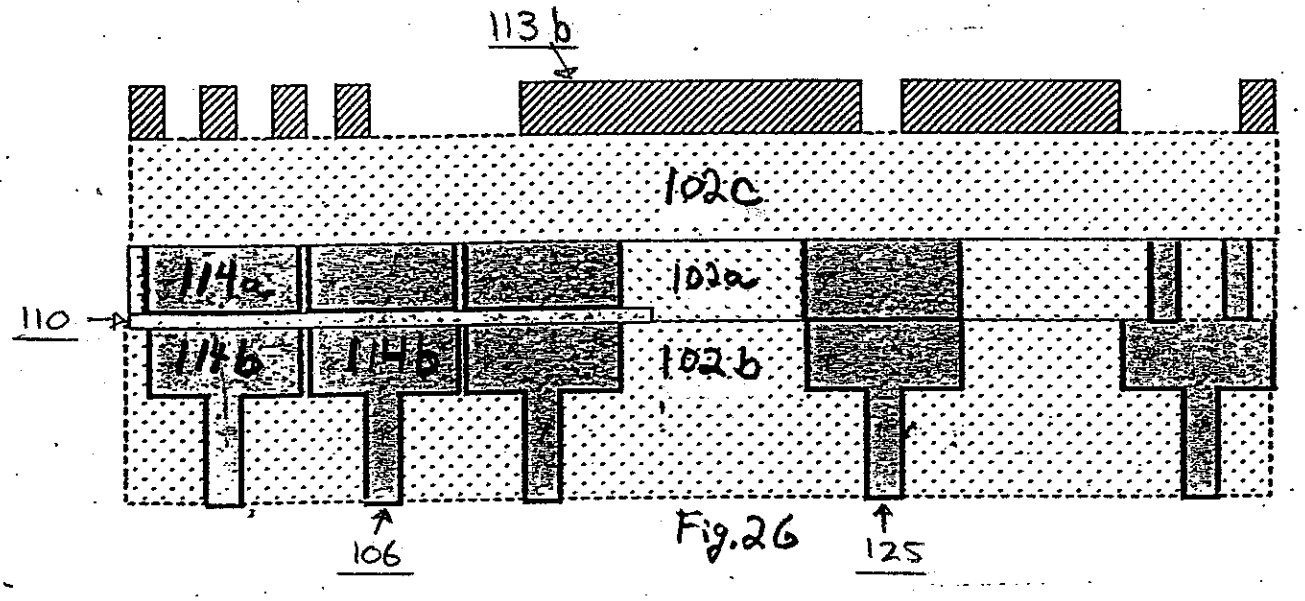
113b
102c
114a
102a
110
114b
114b
102b
106
125

Fig.2G

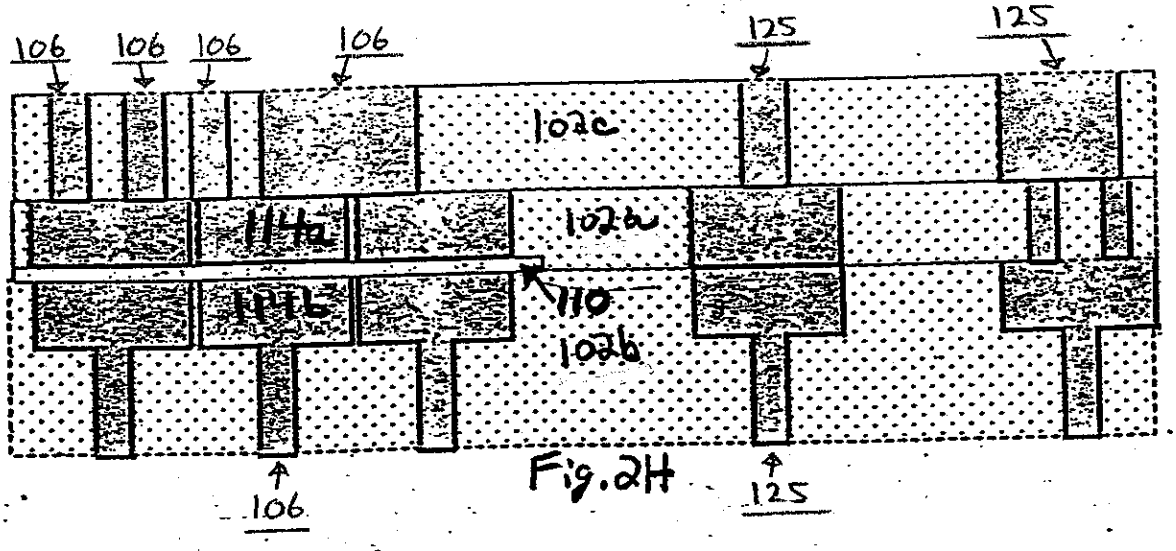
106
106
106
106
125
125
102c
114a
102a
110
114b
102b
106
125

Fig.2H