morbidity and mortality in the Western world. (Loomba and Sanyal, (2013), *The global NAFLD epidemic*., Nat. Rev. Gastroenterol. Hepatol., 10, 686–690).

[0004] Neither ASCVD nor NAFLD is adequately addressed by currently available treatment options. Many patients are not effectively treated for lipid disorders with the current standard of care, ASCVD remains the leading cause of death and disability in the Western world. (Mendis, (2010), *The contribution of the Framingham Heart Study to the prevention of cardiovascular disease: a global perspective*., Prog. Cardiovasc. Dis., 53, 10–14). As such, new therapeutic strategies that target cholesterol and triglyceride metabolism are required. ATP-citrate lyase (ACLY) is an enzyme uniquely positioned at the intersection of nutrient catabolism, and cholesterol and fatty acid biosynthesis, a metabolic nexus shown to be dysregulated in multiple disease states. Significant evidence supports that ACLY-derived acetyl-coenzyme A (CoA) serves not only as carbon precursor for cholesterol and fatty acid biosynthesis, but also as a key metabolic checkpoint used by multiple cell types to sense nutrient availability and coordinate metabolic adaptions with multiple effector functions. Thus, there is an unmet need to develop new therapeutic agents that modulate (e.g., inhibit) ACLY activity to treat metabolic and/or cardiovascular diseases.

SUMMARY

[0005] Provided herein are compounds designed to function as modulators (e.g., inhibitors) of ATP citrate lyase (ACLY). Such compounds can be useful as therapeutic agents for treating conditions, diseases, and disorders associated with aberrant metabolism, such as NAFLD, nonalcoholic steatohepatitis (NASH), type-2 diabetes, chronic kidney disease, inflammation, autoimmunity, and cancer.

[0006] In one example, provided herein are compounds of formula (I)

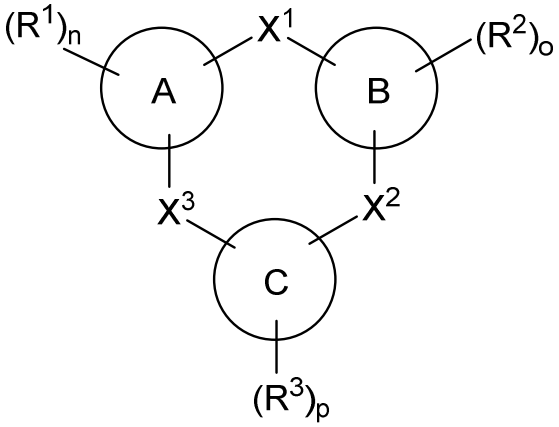

(I),

or a stereoisomer and/or a pharmaceutically acceptable salt thereof, wherein the variables are as defined herein. In one aspect, the disclosure provides a compound of formula (I)

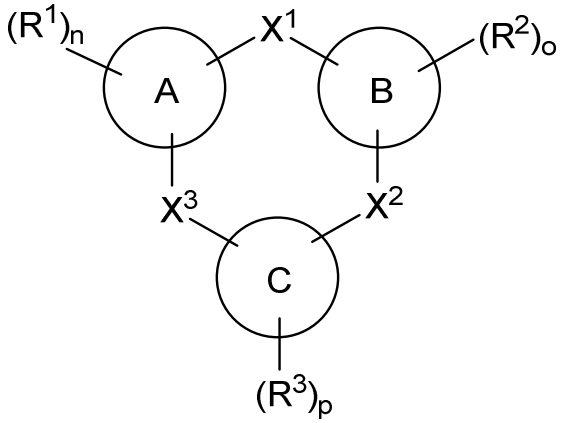

(I)

or a stereoisomer and/or a pharmaceutically acceptable salt thereof, wherein:

Ring A is phenyl, pyridinyl, or pyridonyl, wherein the nitrogen atom of the pyridonyl may optionally be substituted by C_{1-6}alkyl;

Ring B is phenyl or 5-10 membered heterocyclyl;

Ring C is phenyl, 5-10 membered heterocyclyl, or 5-10 membered heteroaryl; or

Ring C is absent;

R^1 is independently, for each occurrence, selected from the group consisting of halogen, hydroxyl, C_{1-6}alkyl, C_{1-6}haloalkyl, C_{1-6}alkoxy, C_{1-6}haloalkoxy, -O-C(O)C_{1-6}alkyl, -O-C(O)C_{3-6}cycloalkyl, and $N(R^E)_2$;

R^2 is independently, for each occurrence, selected from the group consisting of halogen, hydroxyl, C_{1-6}alkyl, C_{1-6}haloalkyl, C_{1-6}alkoxy, C_{1-6}haloalkoxy, C_{3-6}cycloalkyl, and COOH;

R^3 is selected from the group consisting of cyano, halogen, C_{1-6}alkyl, and C_{3-6}cycloalkyl;

X^1 is selected from the group consisting of *-$S(O)_2N(R^A)$-**, -C(O)-, *-C(O)$N(R^A)$-**, *-$CH_2N(R^A)$-**, and *-$S(O)_2CH_2$-**, wherein * denotes the point of attachment to Ring A and ** denotes the point of attachment to Ring B;

X^2 is a bond or -O-;

X^3 is #-L^1-L^2-L^3-##, wherein # denotes the point of attachment to Ring A and ## denotes the point of attachment to Ring C or to Ring B when Ring C is absent;

L^1 is selected from the group consisting of -CH_2-, -O-, -C(O)-, -C(O)$N(R^B)$-, -C(O)O-, C_{1-6}alkyl-O-, -CH_2-C(O)O-, -CH_2-$N(R^B)$C(O)-, and 5-6 membered heteroaryl;

L^2 is C_{1-6}alkyl or 4-6 membered heterocyclyl, wherein the 4-6 membered heterocyclyl may be optionally substituted with oxo; or

L^2 is absent;

L^3 is selected from the group consisting of a bond, -O-, -O-C_{1-6}alkyl, C_{1-6}alkyl-O-, and 4-6 membered heterocyclyl;

R^A is hydrogen or C_{1-6}alkyl;

R^B is hydrogen or C_{1-6}alkyl;

R^E is independently, for each occurrence, hydrogen or C_{1-6}alkyl;

n is 0, 1, or 2;

o is 1 or 2; and

p is 0 or 1.

[0007] In another example, provided herein are compounds of formula (Ia)

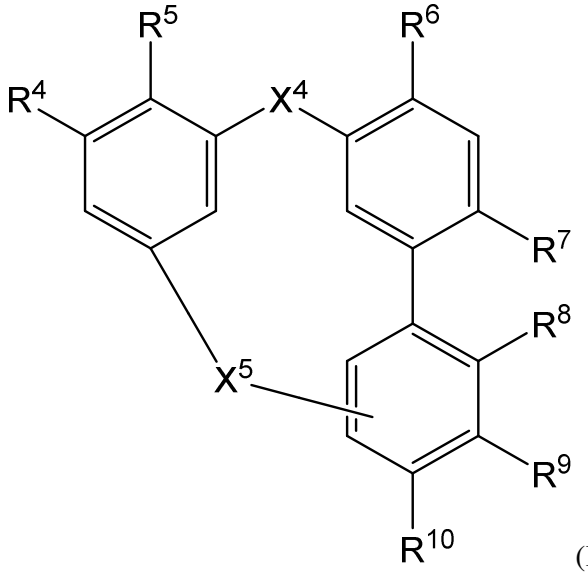

(Ia),

or a stereoisomer and/or a pharmaceutically acceptable salt thereof, wherein the variables are as defined herein. In one aspect, the disclosure provides a compound of formula (Ia)

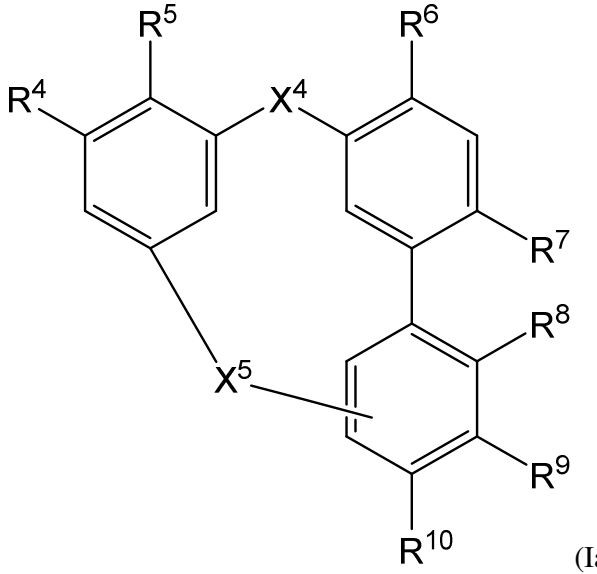

(Ia)

or a stereoisomer and/or a pharmaceutically acceptable salt thereof, wherein:

R^4 is selected from the group consisting of hydrogen, hydroxyl, halogen, and C_{1-6}alkyl;

R^5 is selected from the group consisting of hydrogen, halogen, hydroxyl, C_{1-6}alkoxy, C_{1-6}haloalkyl, C_{1-6}haloalkoxy, -C(O)OC_{1-6}alkyl, and -C(O)OC_{1-6}cycloalkyl;

R^6 is selected from the group consisting of hydrogen, halogen, hydroxyl, C_{1-6}alkoxy, C_{1-6}haloalkoxy, C_{1-6}alkyl, C_{1-6}haloalkyl, C_{3-6}cycloalkyl, and C(O)OH;

R^7 is selected from the group consisting of hydrogen, halogen, C_{1-6}alkyl, C_{1-6}haloalkyl, and C_{1-6}alkoxy;

R^8 is hydrogen, halogen, or C_{1-6}alkyl;

R^9 is selected from the group consisting of hydrogen, cyano, halogen, and C_{3-6}cycloalkyl;

R^{10} is hydrogen, cyano, or halogen;

X^4 is selected from the group consisting of *-$S(O)_2N(R^C)$-**, *-$C(O)N(R^C)$-**, *-$CH_2N(R^C)$-**, and *-$S(O)_2CH_2$-**, wherein * denotes the point of attachment to

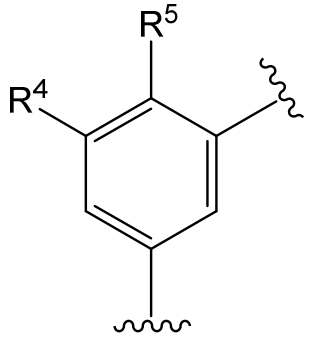

and ** denotes the point of attachment to

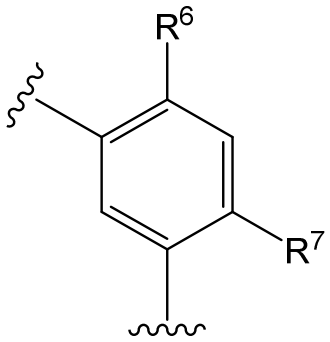

;

X^5 is #-L^4-L^5-L^6-##, wherein # denotes the point of attachment to

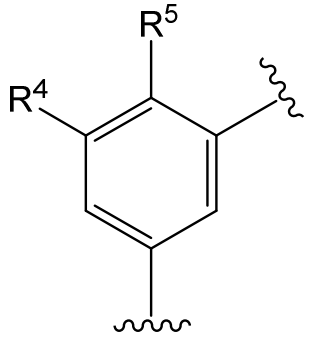

and ## denotes the point of attachment to

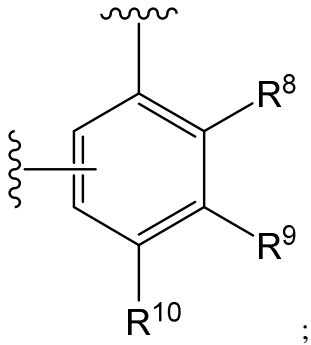

;

L^4 is selected from the group consisting of CH_2, C_{1-6}alkyl-O-, -O-, -C(O)-, -$C(O)N(R^D)$-, -C(O)O-, -CH_2-C(O)O-, -CH_2-$N(R^D)$C(O)-, and 5-6 membered heteroaryl;

L^5 is C_{1-6}alkyl or 4-6 membered heterocyclyl, wherein the 4-6 membered heterocyclyl may be optionally substituted with oxo;

L^6 is selected from the group consisting of a bond, -O-, C_{1-6}alkyl-O-, and 4-6 membered heterocyclyl;

R^C is hydrogen or C_{1-6}alkyl; and

R^D is hydrogen or C_{1-6}alkyl.

[0008] In certain examples, the compounds of formula (I) or formula (Ia) are selected from the compounds of Table 1 or a stereoisomer and/or a pharmaceutically acceptable salt thereof. In one aspect, the disclosure provides a compound selected from any compound set forth in Table 1, or a pharmaceutically acceptable salt thereof.

[0009] In another example, provided herein are pharmaceutical compositions comprising a compound disclosed herein or a stereoisomer and/or a pharmaceutically acceptable salt thereof, and one or more pharmaceutically acceptable carriers. In one aspect, the disclosure provides a pharmaceutical composition comprising a compound as disclosed herein; and a pharmaceutically acceptable carrier.

[0010] A compound of formula (I) or a stereoisomer and/or a pharmaceutically acceptable salt thereof; or a pharmaceutical composition of the disclosure can be used in treating the various conditions, diseases, and disorders described herein. In one aspect, the disclosure provides use of the compound as disclosed herein or the pharmaceutical composition as disclosed herein, in the manufacture of a medicament for inhibiting ACLY in a subject in need thereof. In one aspect, the disclosure provides use of the compound as disclosed herein or the pharmaceutical composition as disclosed herein, in the manufacture of a medicament for treating NAFLD in a subject in need thereof. In one aspect, the disclosure provides use of the compound as disclosed herein or the pharmaceutical composition as disclosed herein, in the manufacture of a medicament for treating NASH in a subject in need thereof. In one aspect, the disclosure provides use of the compound as disclosed herein or the pharmaceutical composition as disclosed herein, in the manufacture of a medicament for treating type-2 diabetes in a subject in need thereof. In one aspect, the disclosure provides use of the compound as disclosed herein or the pharmaceutical composition as disclosed herein, in the manufacture of a medicament for treating inflammation in a subject in need thereof. In one aspect, the disclosure provides use of the compound as disclosed herein or the pharmaceutical composition as disclosed herein, in the manufacture of a medicament for treating chronic kidney disease in a subject in need thereof. In one aspect, the disclosure provides use of the compound as disclosed herein or the pharmaceutical composition as disclosed herein, in the manufacture of a medicament for treating autoimmunity in a subject in need thereof. In one aspect, the disclosure provides use of the compound as disclosed herein or the pharmaceutical composition as disclosed herein, in the manufacture of a medicament for treating cancer in a subject in need thereof. In one aspect, the disclosure provides the compound as disclosed herein or the pharmaceutical composition as disclosed herein for use in therapy. For example, the methods of treatment can include inhibiting ACLY, inhibiting cholesterol synthesis, and/or suppressing fatty acid biosynthesis. In some examples, the condition, disease, or disorder can be a liver condition, disease, or disorder such as NAFLD or NASH and the methods include treating the liver condition, disease, or disorder such as NAFLD or NASH. In some examples, the condition, disease, or disorder can be type-2 diabetes and the methods include treating type-2 diabetes. In some examples, the condition, disease, or disorder can be inflammation and the methods include treating inflammation. In some examples, the condition, disease, or disorder is chronic kidney disease and the methods include treating

chronic kidney disease. In some examples, the condition, disease, or disorder is autoimmunity and the methods include treating autoimmunity. In some examples, the condition, disease, or disorder is cancer and the methods include treating cancer.

DETAILED DESCRIPTION

[0011] As generally described herein, the disclosure provides compounds of formula (I), e.g., a compound of formula (Ia), formula (Ib) or formula (II), or a stereoisomer and/or a pharmaceutically acceptable salt thereof, and pharmaceutical compositions containing the same. The compounds and compositions described herein function as modulators (e.g., inhibitors) of ACLY. The disclosure also provides methods of using the compounds and compositions disclosed herein to treat a variety of conditions, diseases, and disorders associated with aberrant metabolism. Such conditions, diseases, and disorders include, but are not limited to NAFLD, NASH, type-2 diabetes, chronic kidney disease, inflammation, autoimmunity, and cancer.

Definitions

[0012] To facilitate an understanding of the present invention, a number of terms and phrases are defined below.

[0013] Unless defined otherwise, all technical and scientific terms used herein have the same meaning as commonly understood by one of ordinary skill in the art to which this invention belongs. The abbreviations used herein have their conventional meaning within the chemical and biological arts. The chemical structures and formulae set forth herein are constructed according to the standard rules of chemical valency known in the chemical arts.

[0014] Throughout the description, where compositions and kits are described as having, including, or comprising specific components, or where processes and methods are described as having, including, or comprising specific steps, it is contemplated that, additionally, there are compositions and kits of the present invention that consist essentially of, or consist of, the recited components, and that there are processes and methods according to the present invention that consist essentially of, or consist of, the recited processing steps.

[0015] In the application, where an element or component is said to be included in and/or selected from a list of recited elements or components, it should be understood that the element or component can be any one of the recited elements or components, or the element or component can be selected from a group consisting of two or more of the recited elements or components.