Fig.1

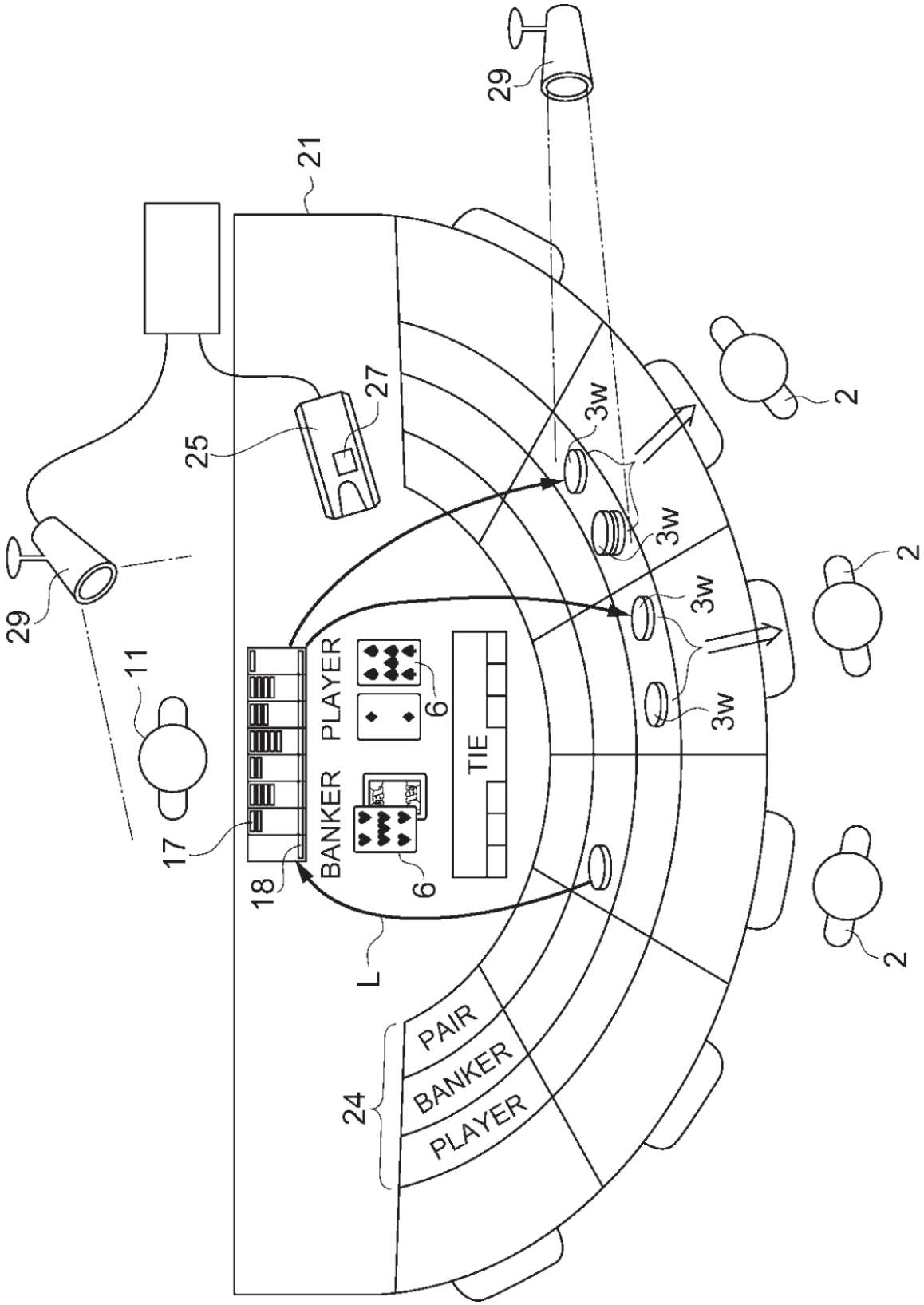
29
21
27
25
29
11
17
18
BANKER
PLAYER
6
6
TIE
L
3w
3w
3w
3w
2
2
2
24
PAIR
BANKER
PLAYER

Fig.2A

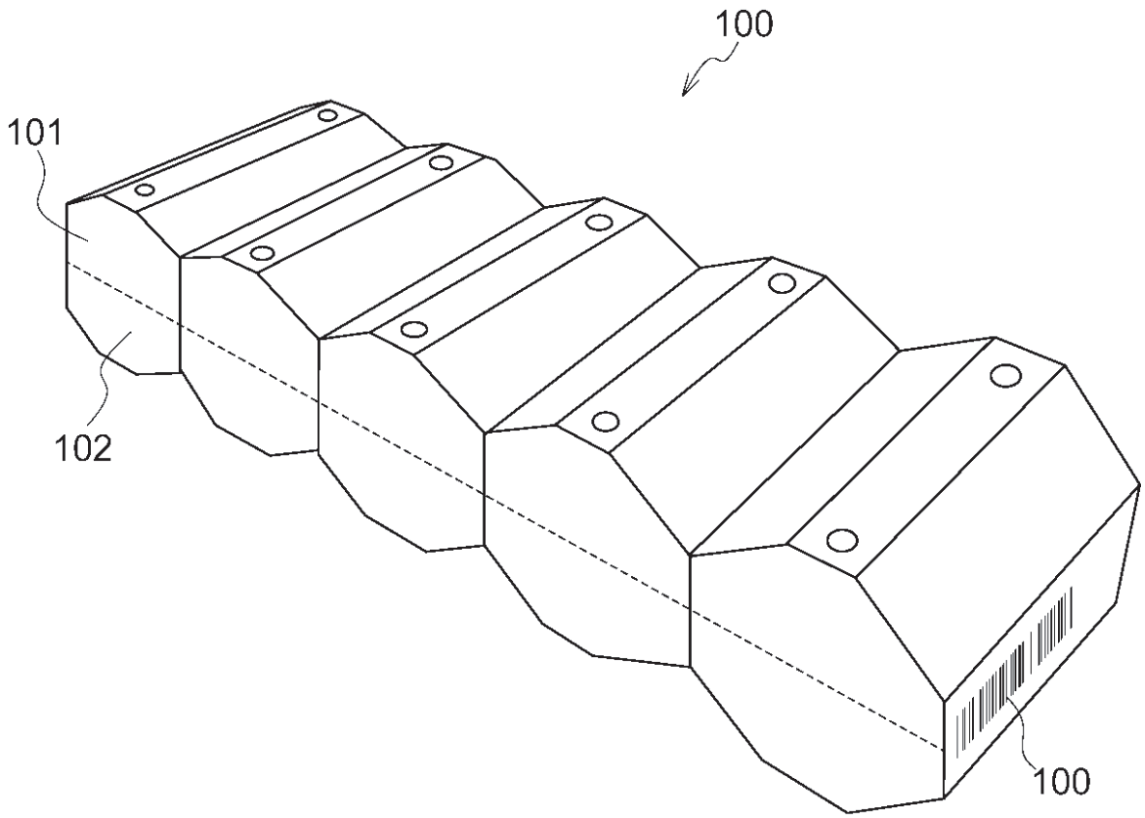

Fig.2B

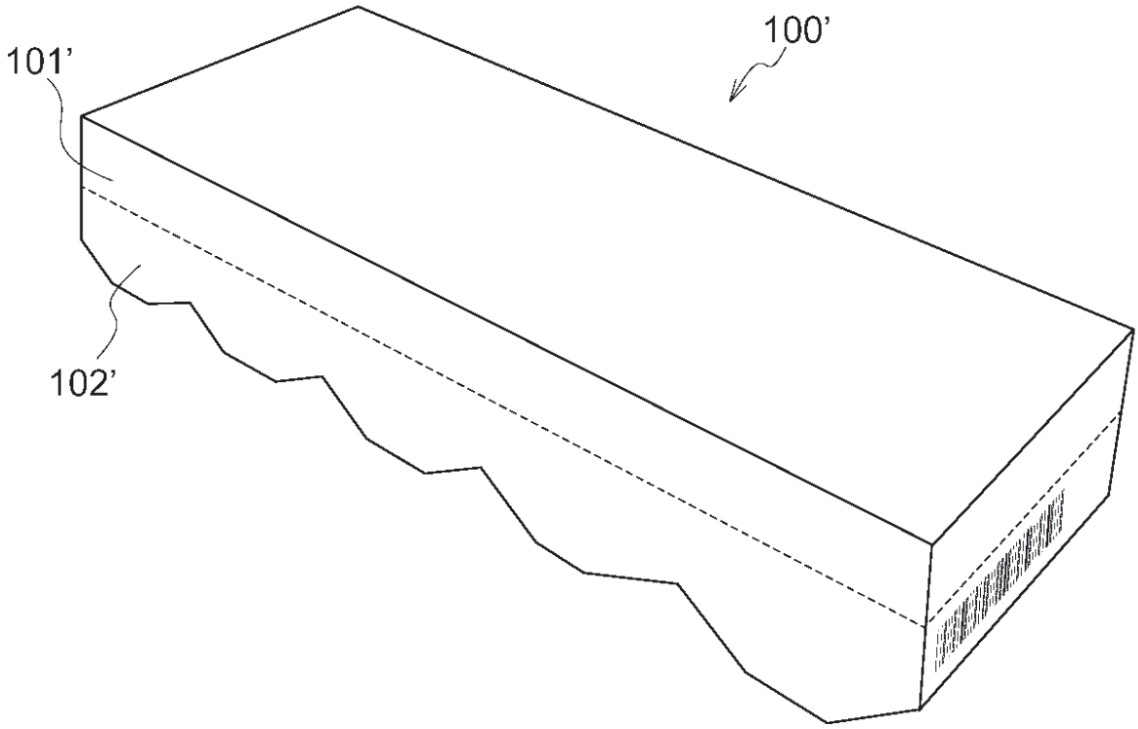

Fig.3

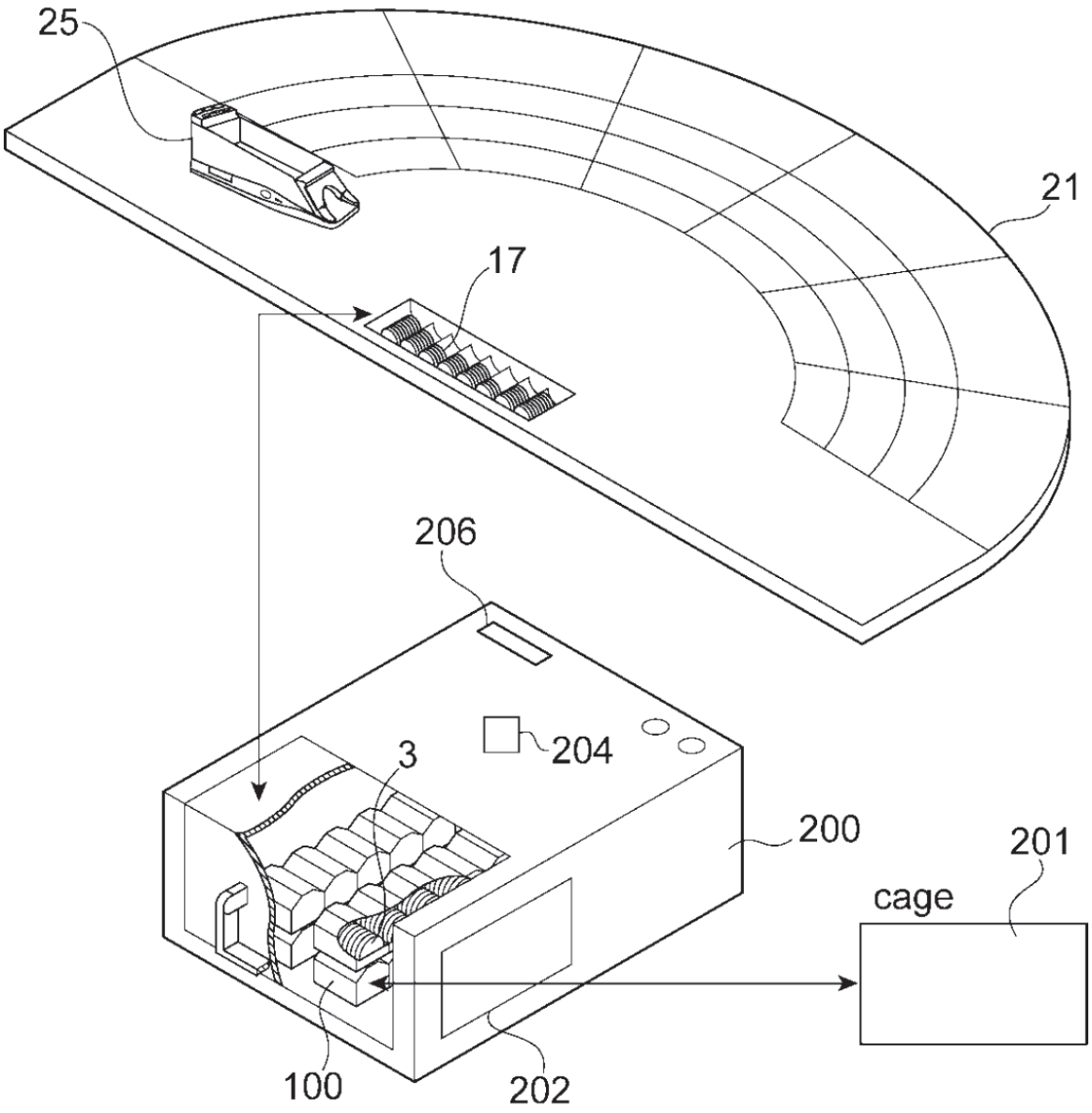

Fig.4

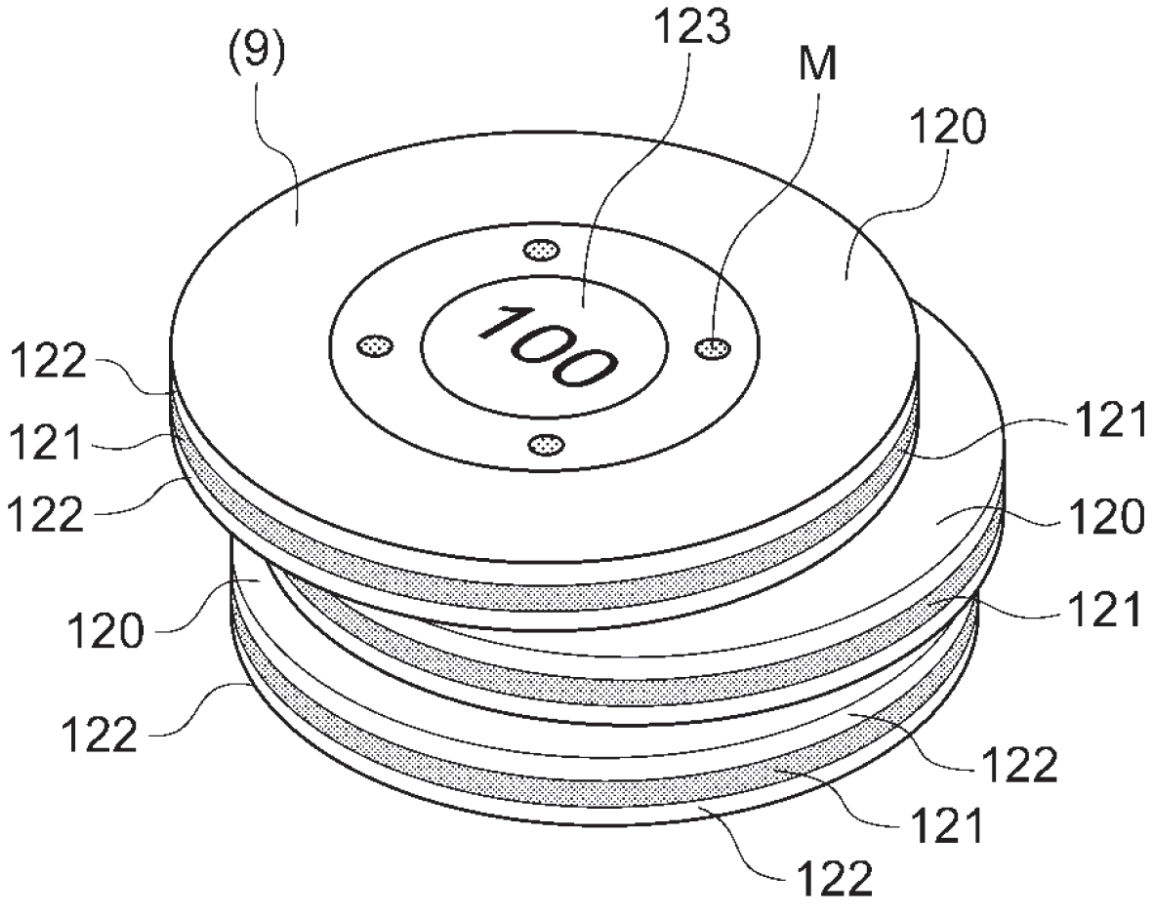

Fig.5

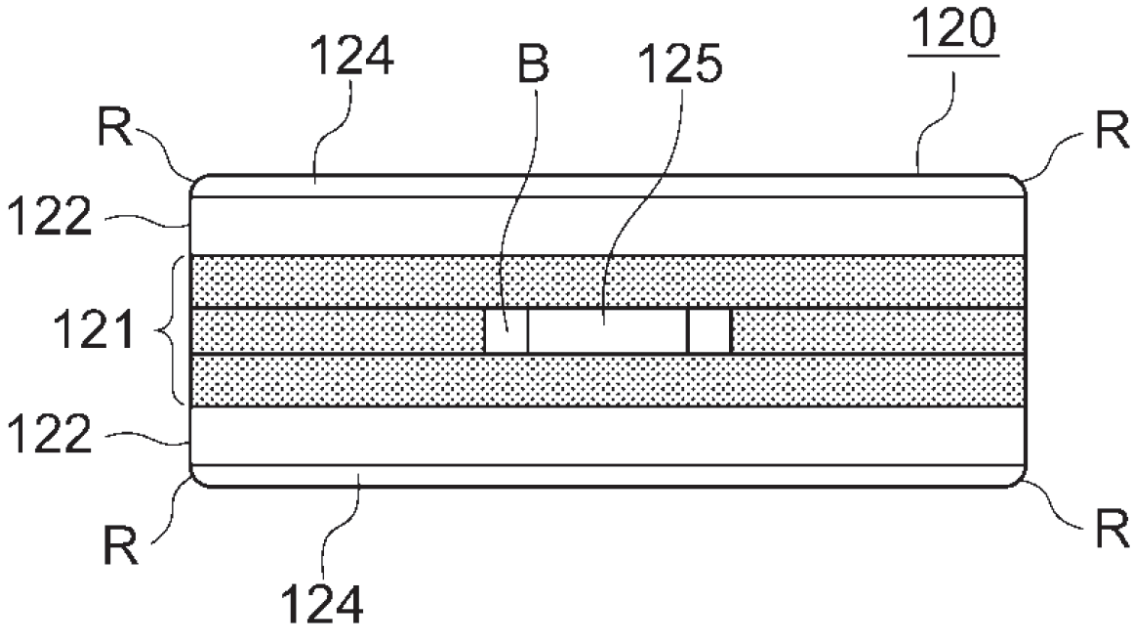

Fig.6

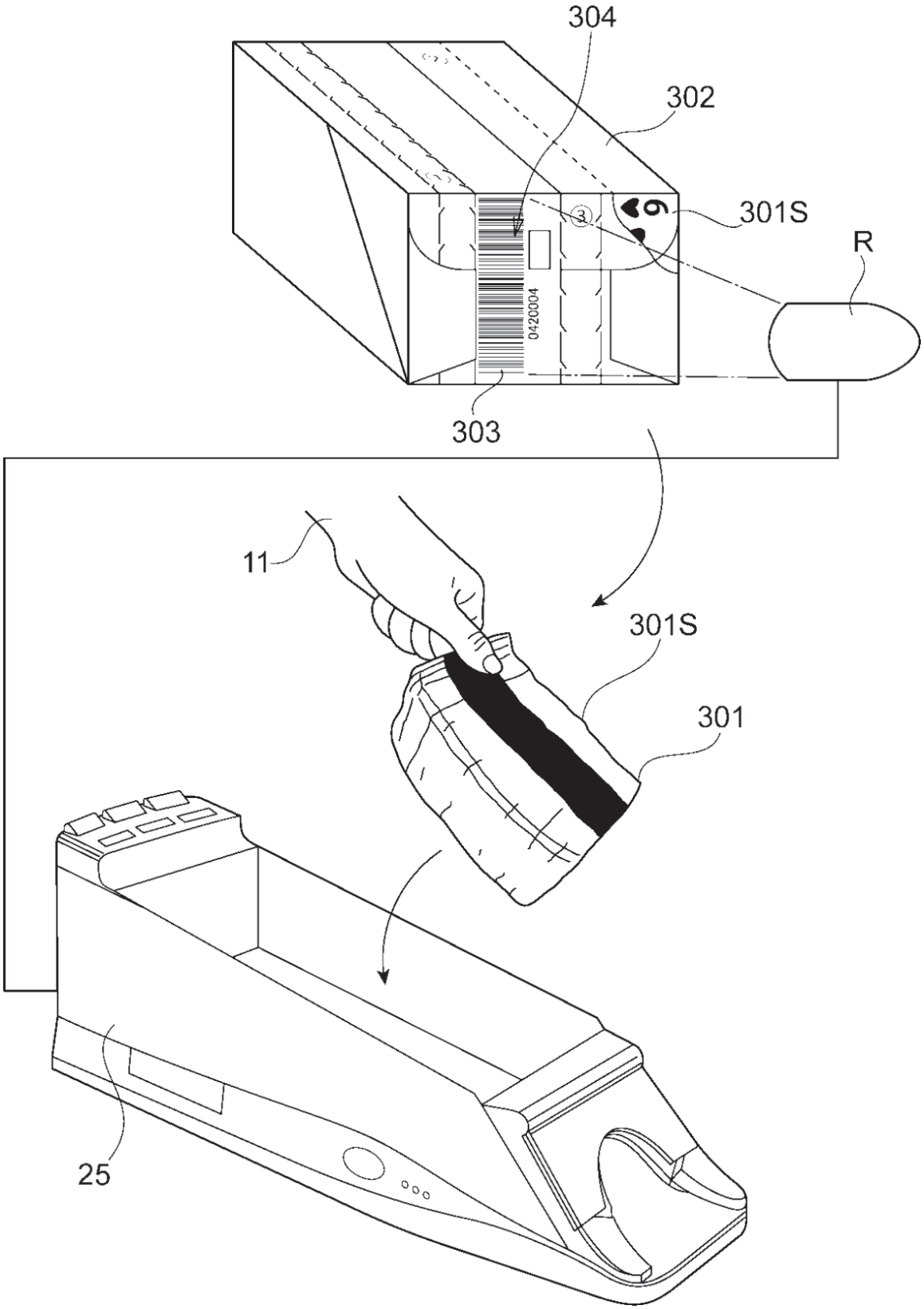

Fig.7

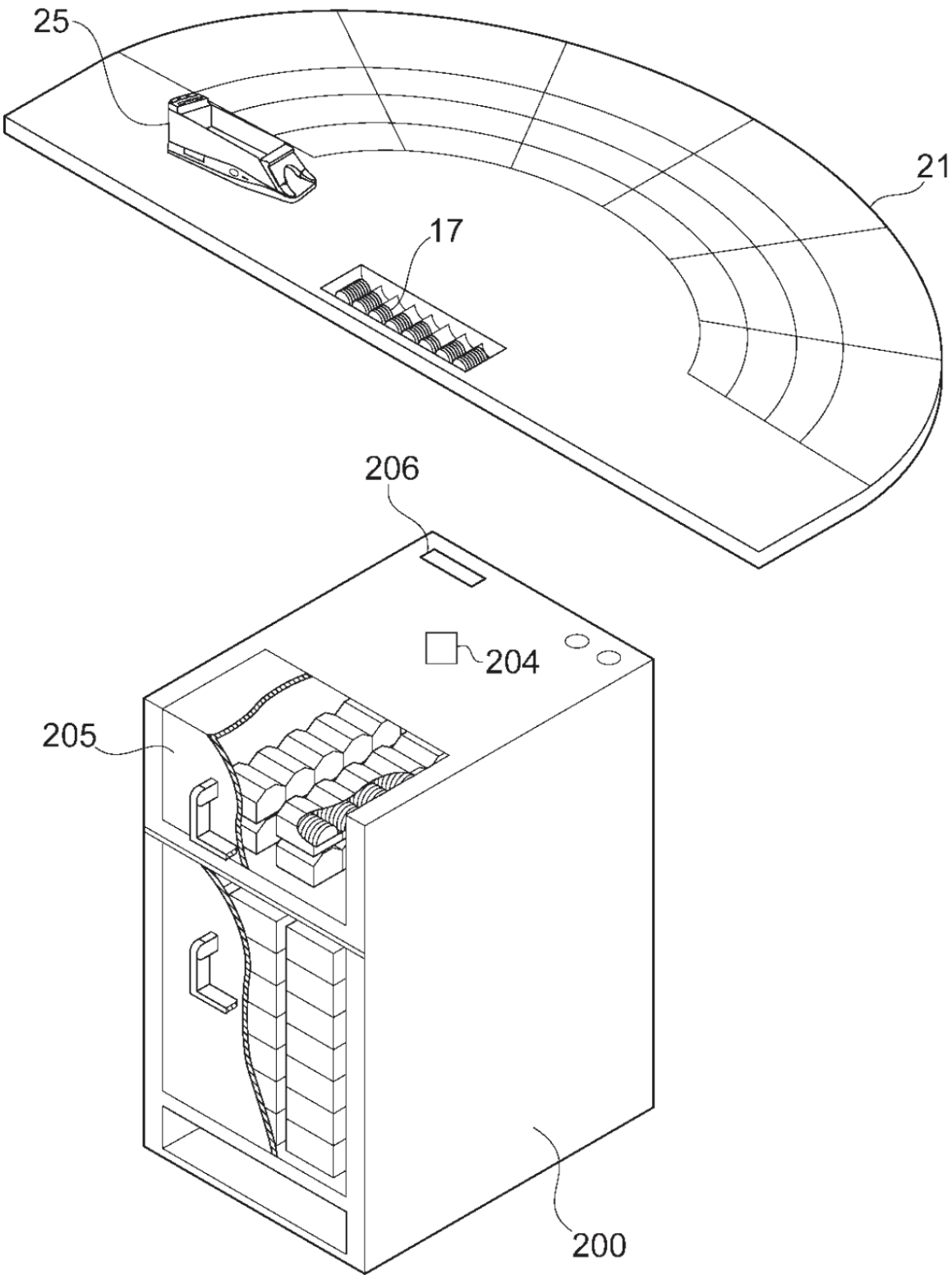

Fig.8

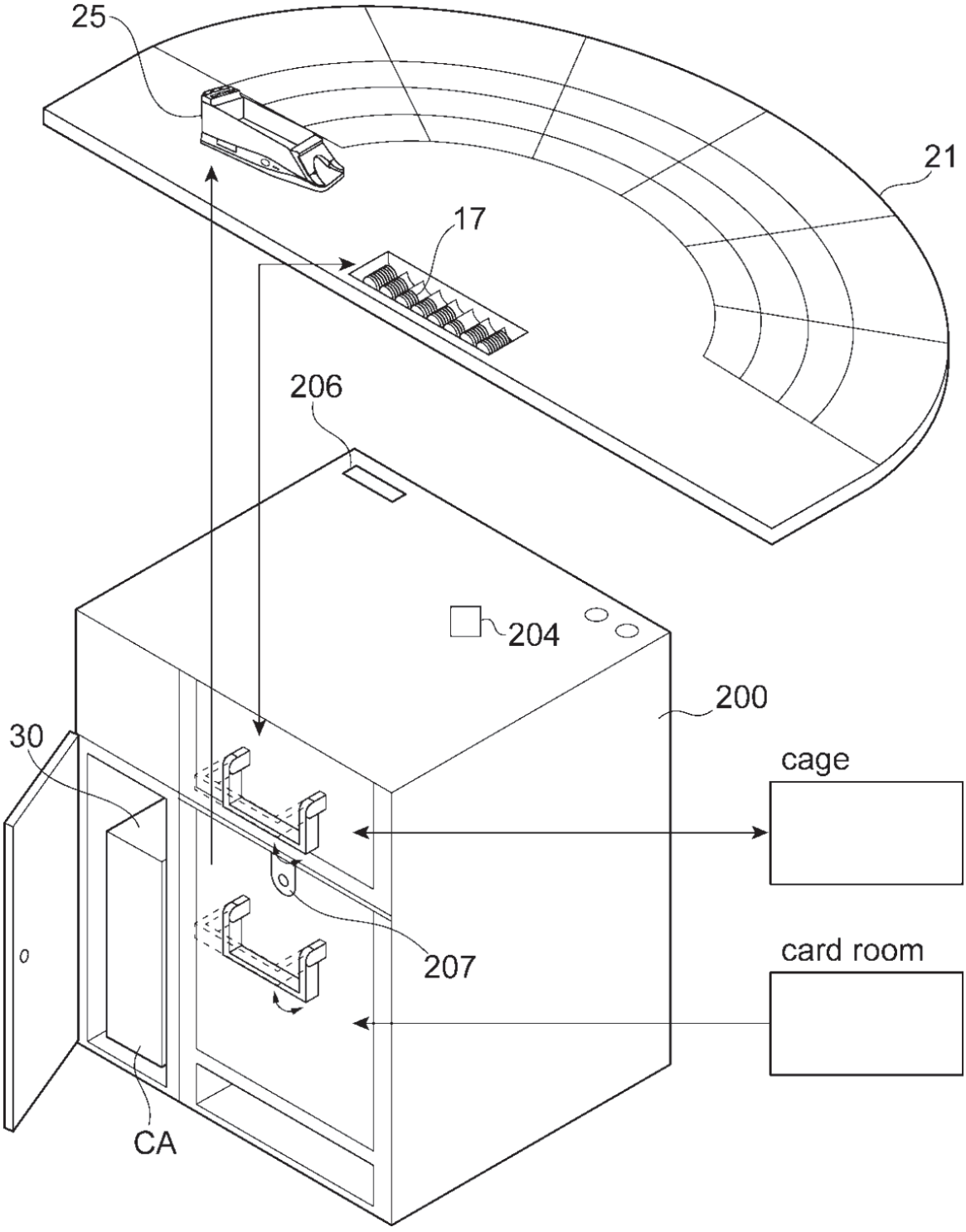

Fig.9

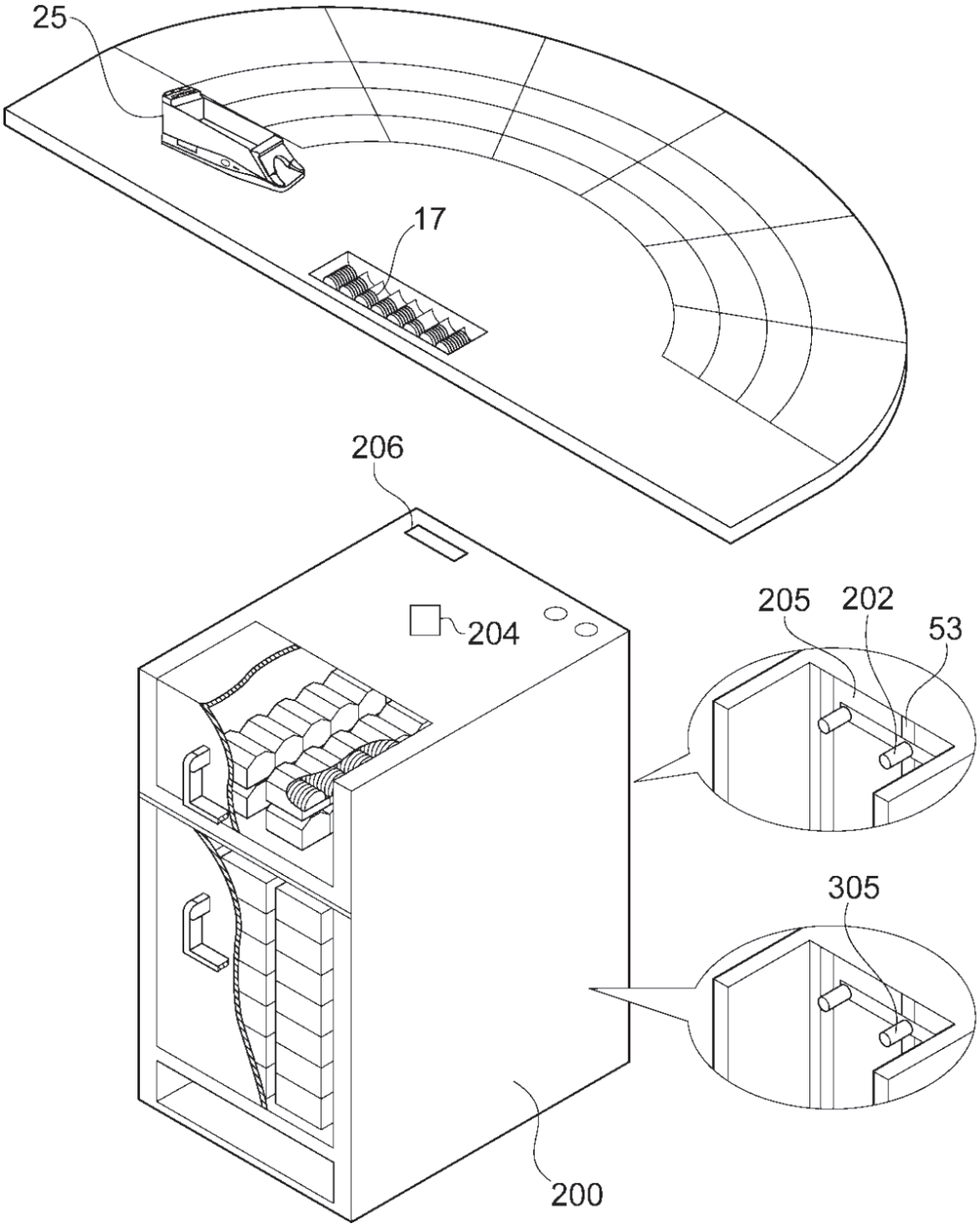

Fig.10

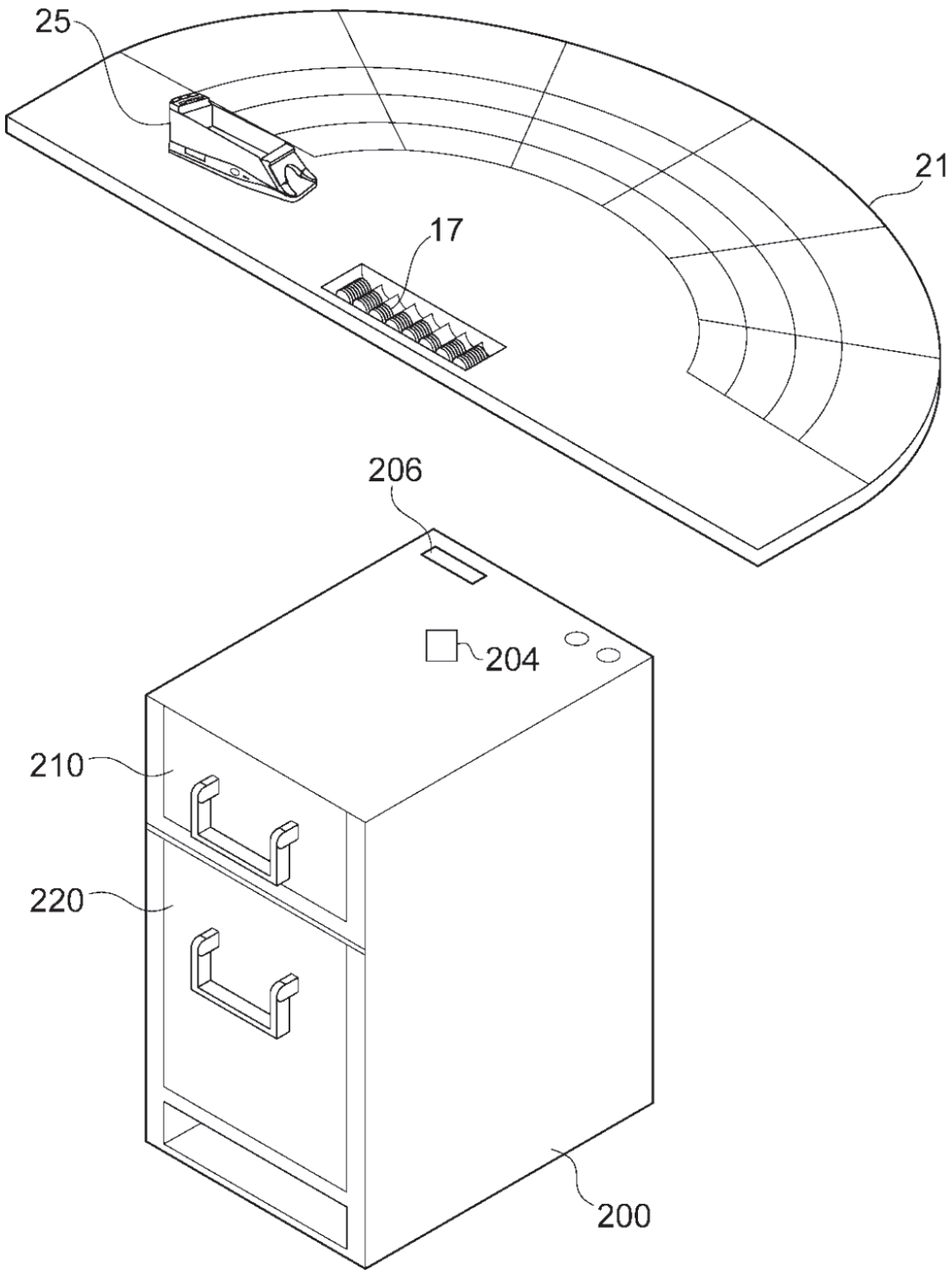

Fig.11

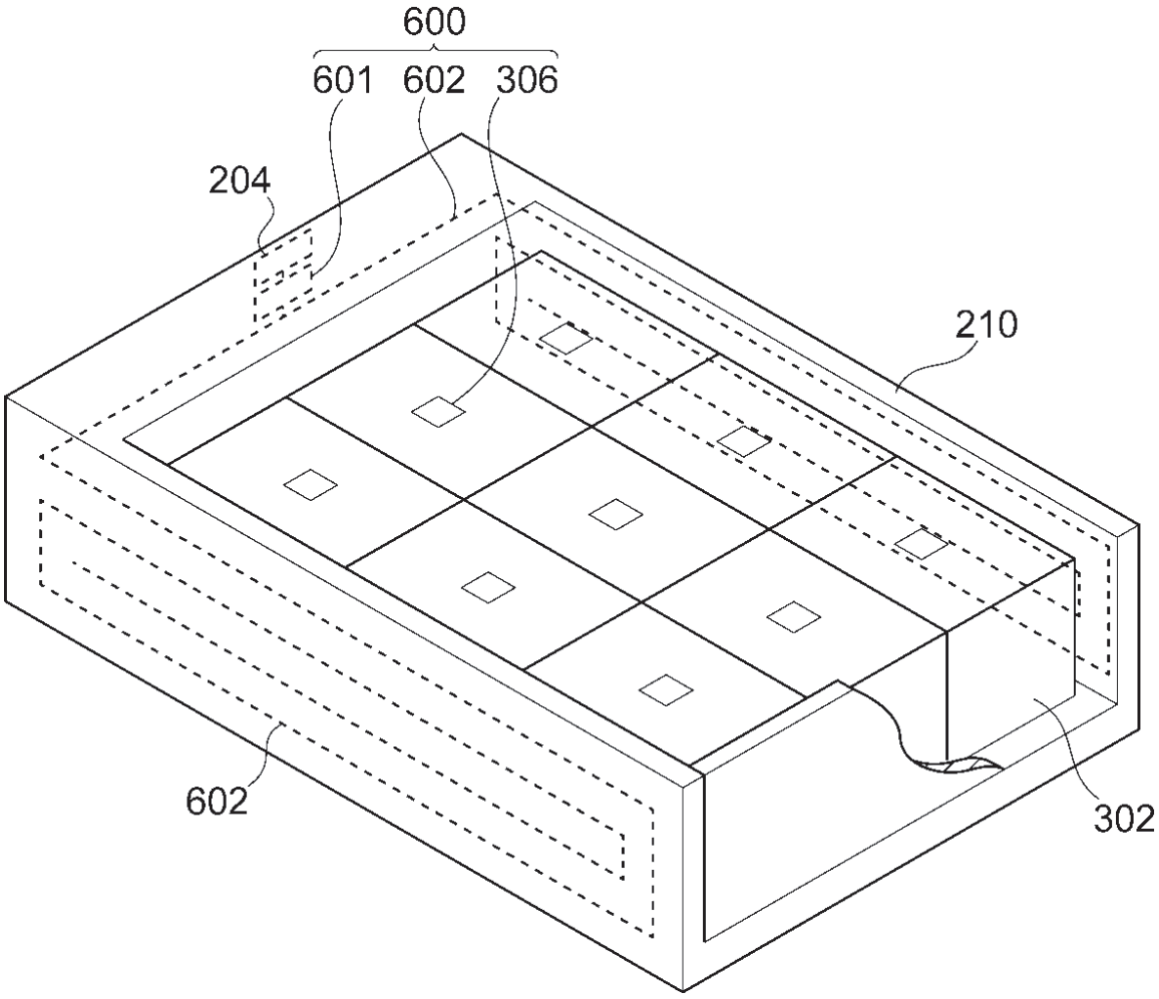

Fig.12

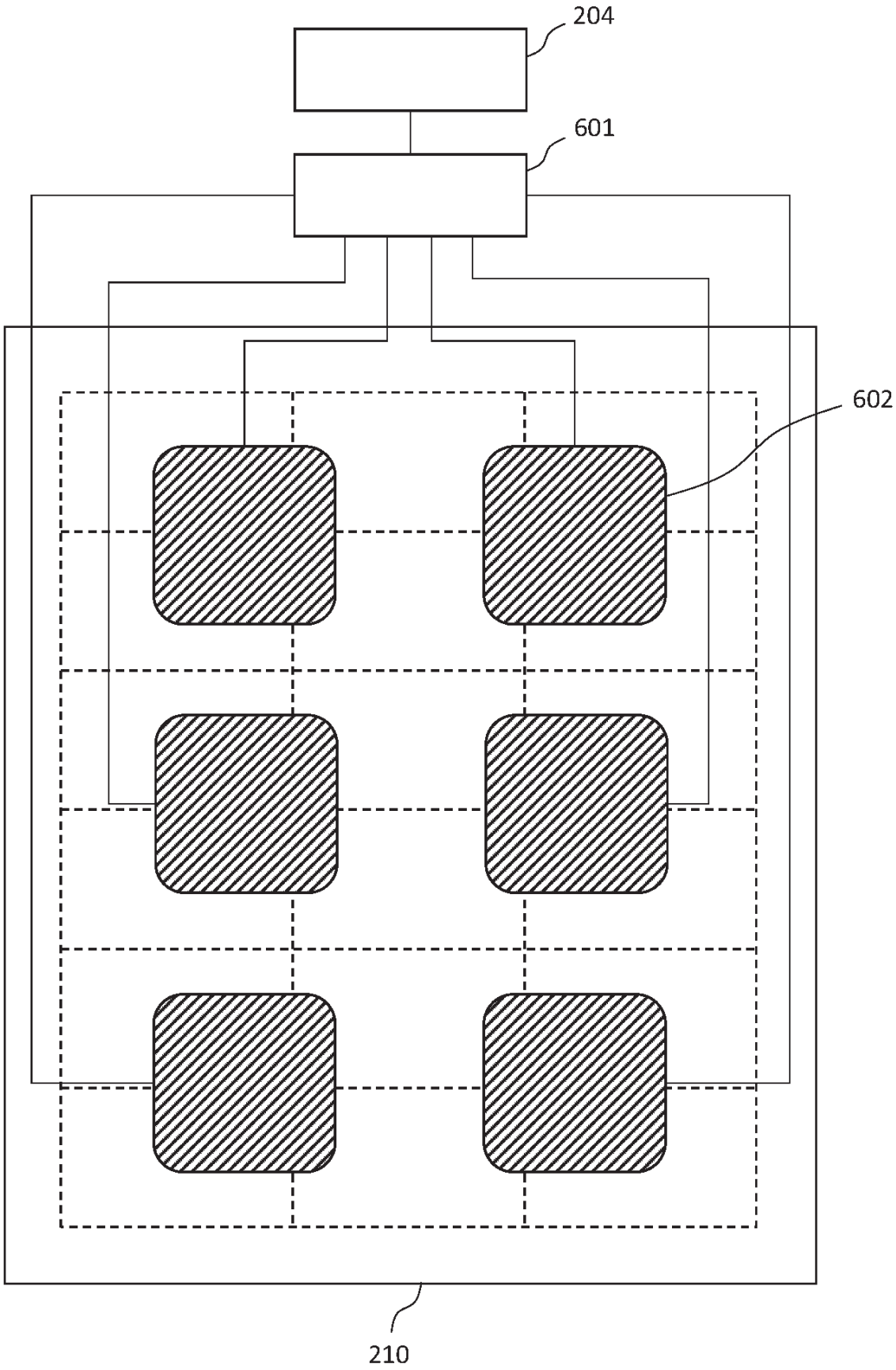

Fig.13

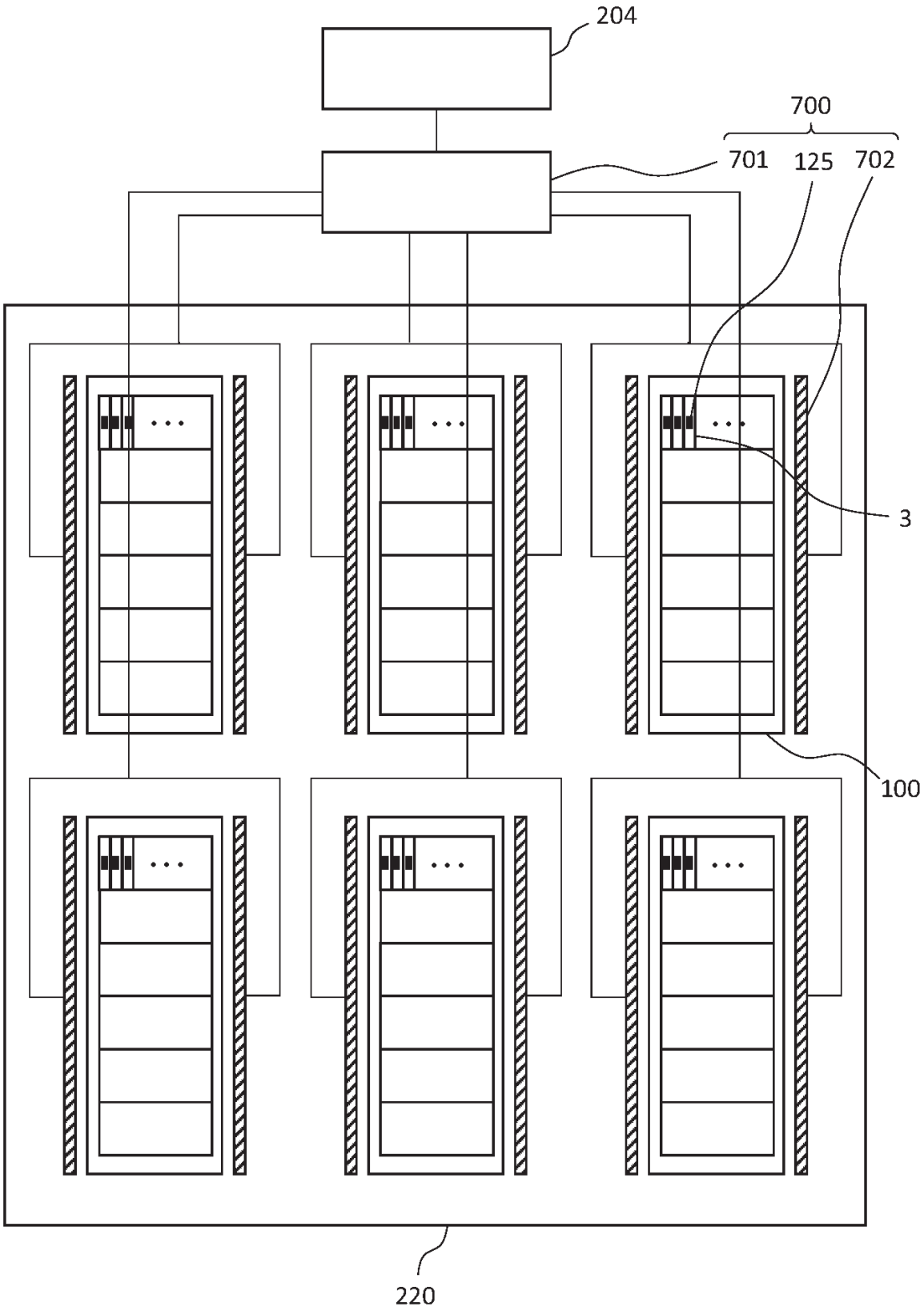

Fig.14

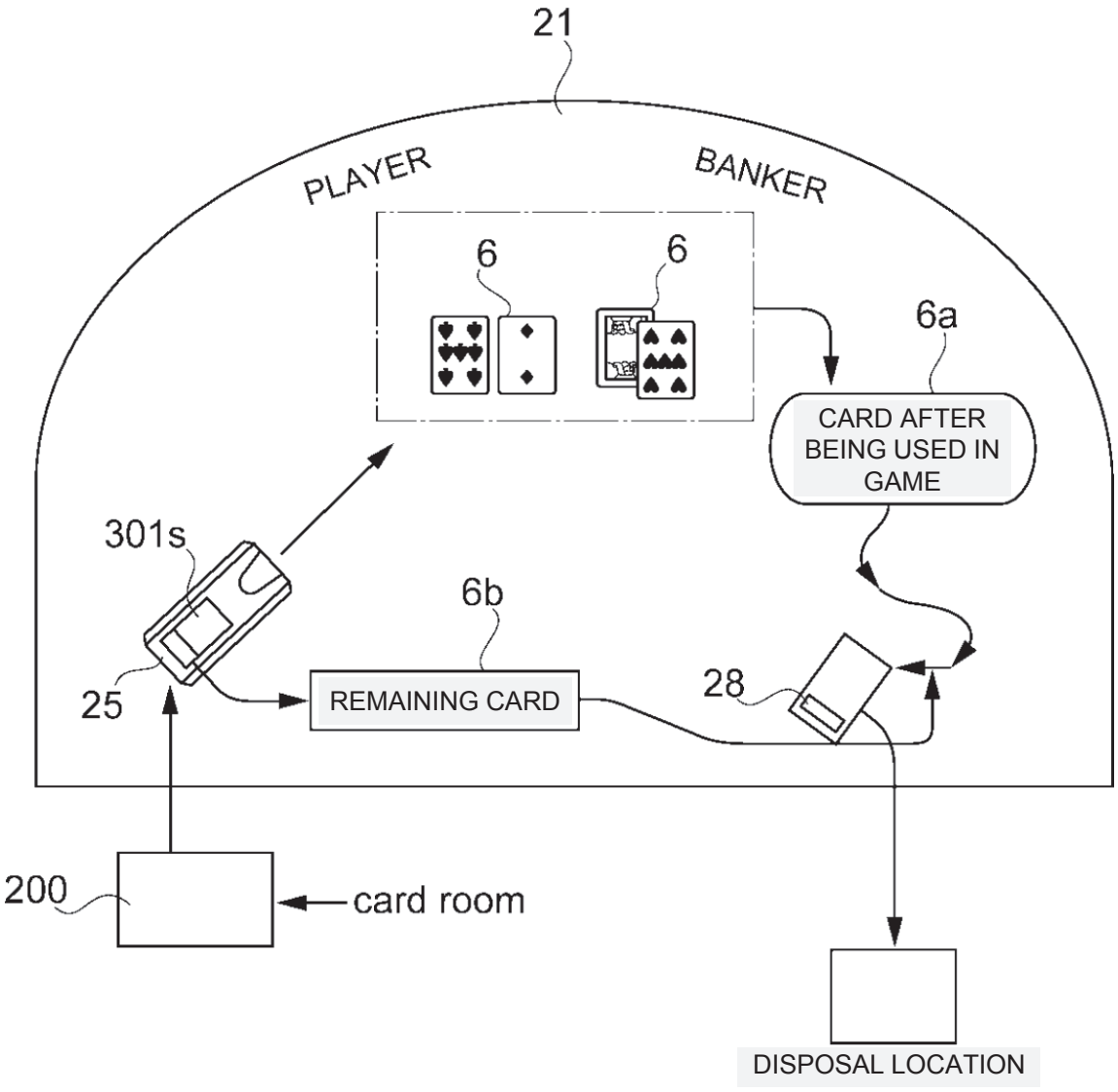
21
PLAYER
BANKER
6
6
6a
CARD AFTER BEING USED IN GAME
301s
6b
25
REMAINING CARD
28
200
card room
DISPOSAL LOCATION