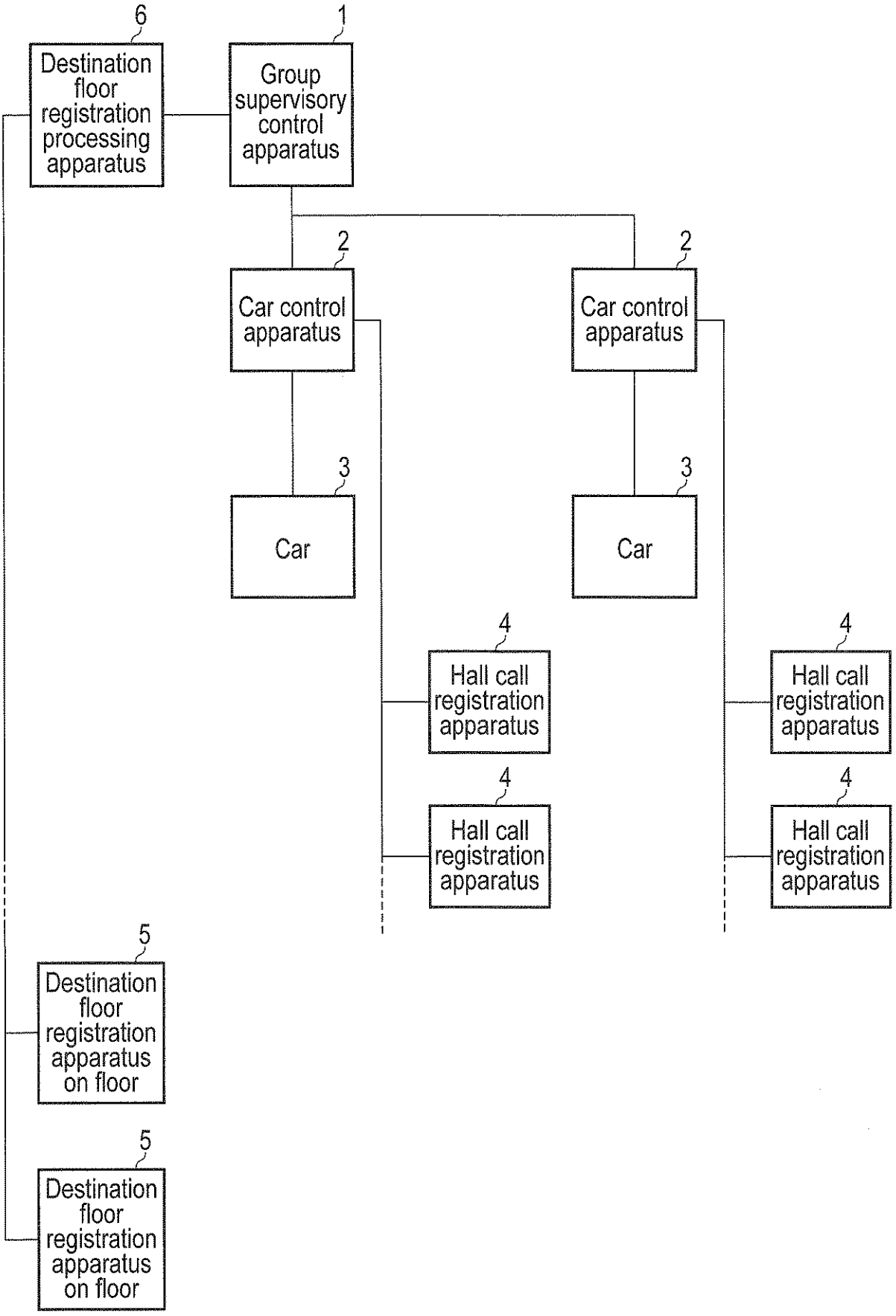
6
Destination floor registration processing apparatus
1
Group supervisory control apparatus
2
Car control apparatus
2
Car control apparatus
3
Car
3
Car
4
Hall call registration apparatus
4
Hall call registration apparatus
4
Hall call registration apparatus
4
Hall call registration apparatus
5
Destination floor registration apparatus on floor
5
Destination floor registration apparatus on floor

FIG. 1

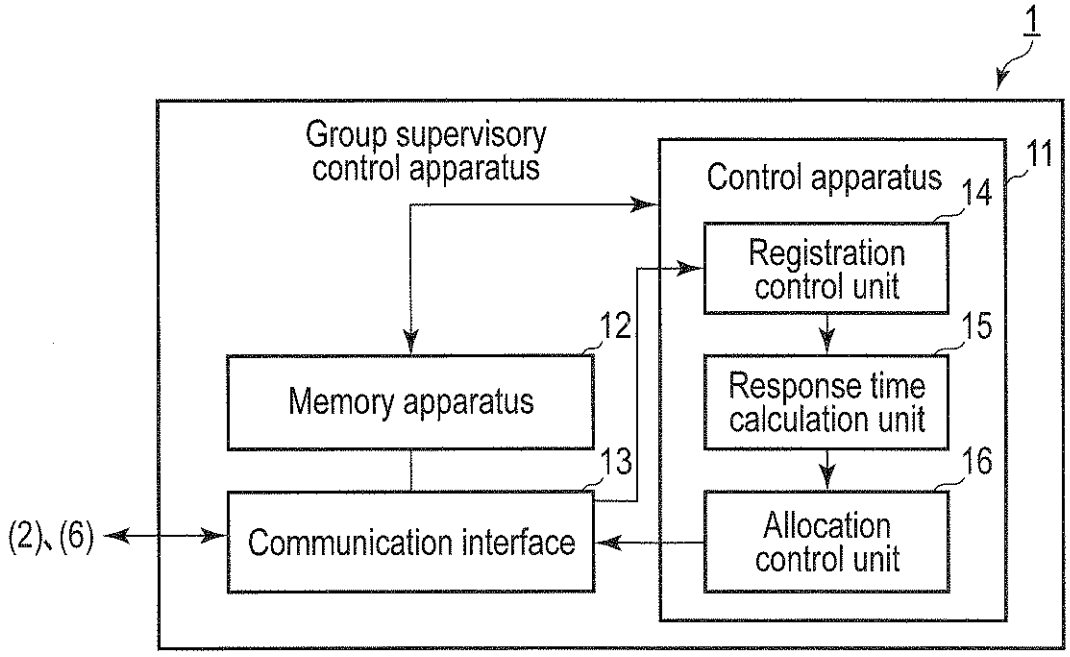
1
Group supervisory control apparatus
Control apparatus
11
14
Registration control unit
12
15
Memory apparatus
Response time calculation unit
13
16
(2), (6)
Communication interface
Allocation control unit

FIG. 2

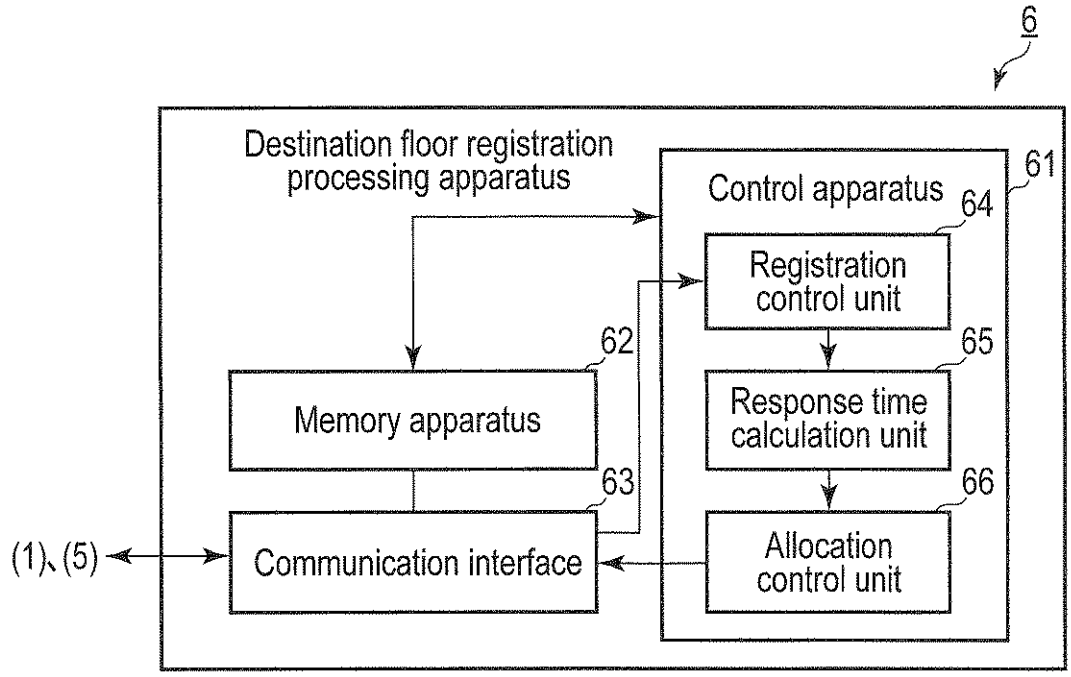
6
Destination floor registration processing apparatus
Control apparatus
61
64
Registration control unit
62
65
Memory apparatus
Response time calculation unit
63
66
(1), (5)
Communication interface
Allocation control unit

FIG. 3

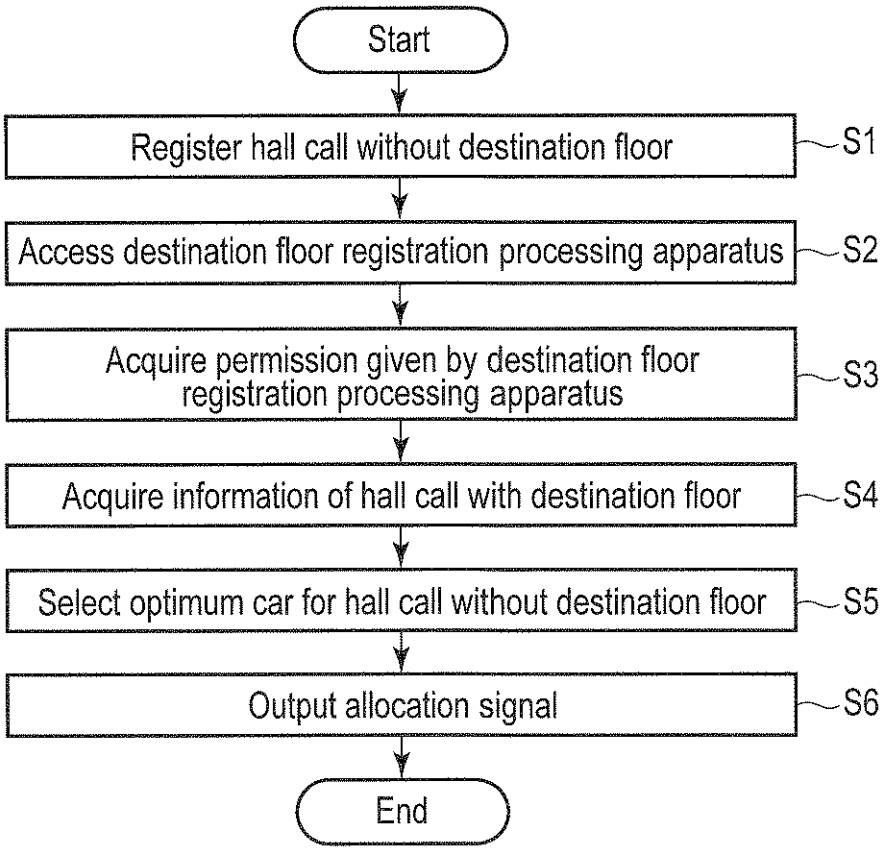
Start
Register hall call without destination floor
S1
Access destination floor registration processing apparatus
S2
Acquire permission given by destination floor registration processing apparatus
S3
Acquire information of hall call with destination floor
S4
Select optimum car for hall call without destination floor
S5
Output allocation signal
S6
End

FIG. 4

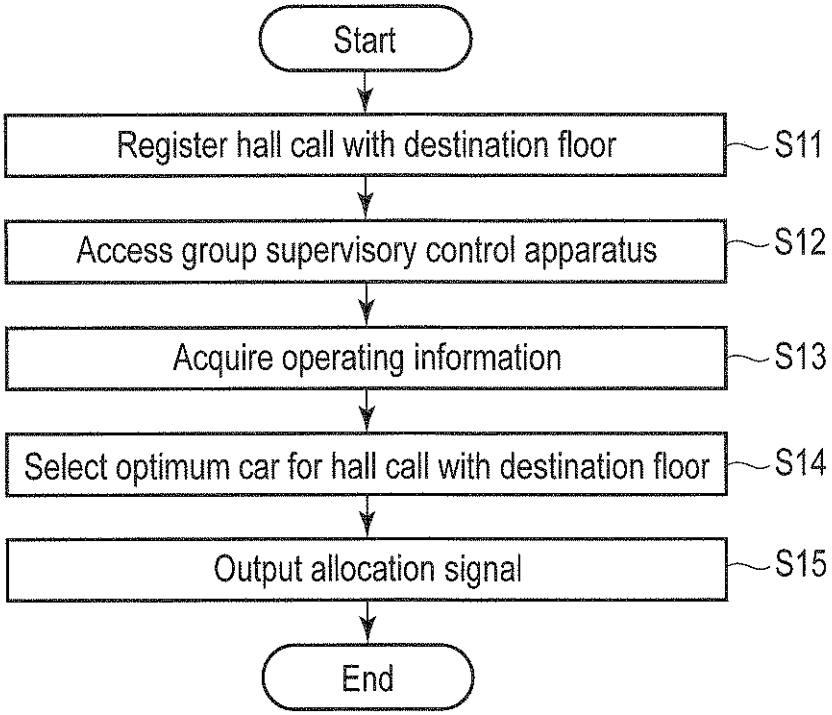
Start
Register hall call with destination floor
S11
Access group supervisory control apparatus
S12
Acquire operating information
S13
Select optimum car for hall call with destination floor
S14
Output allocation signal
S15
End

FIG. 5

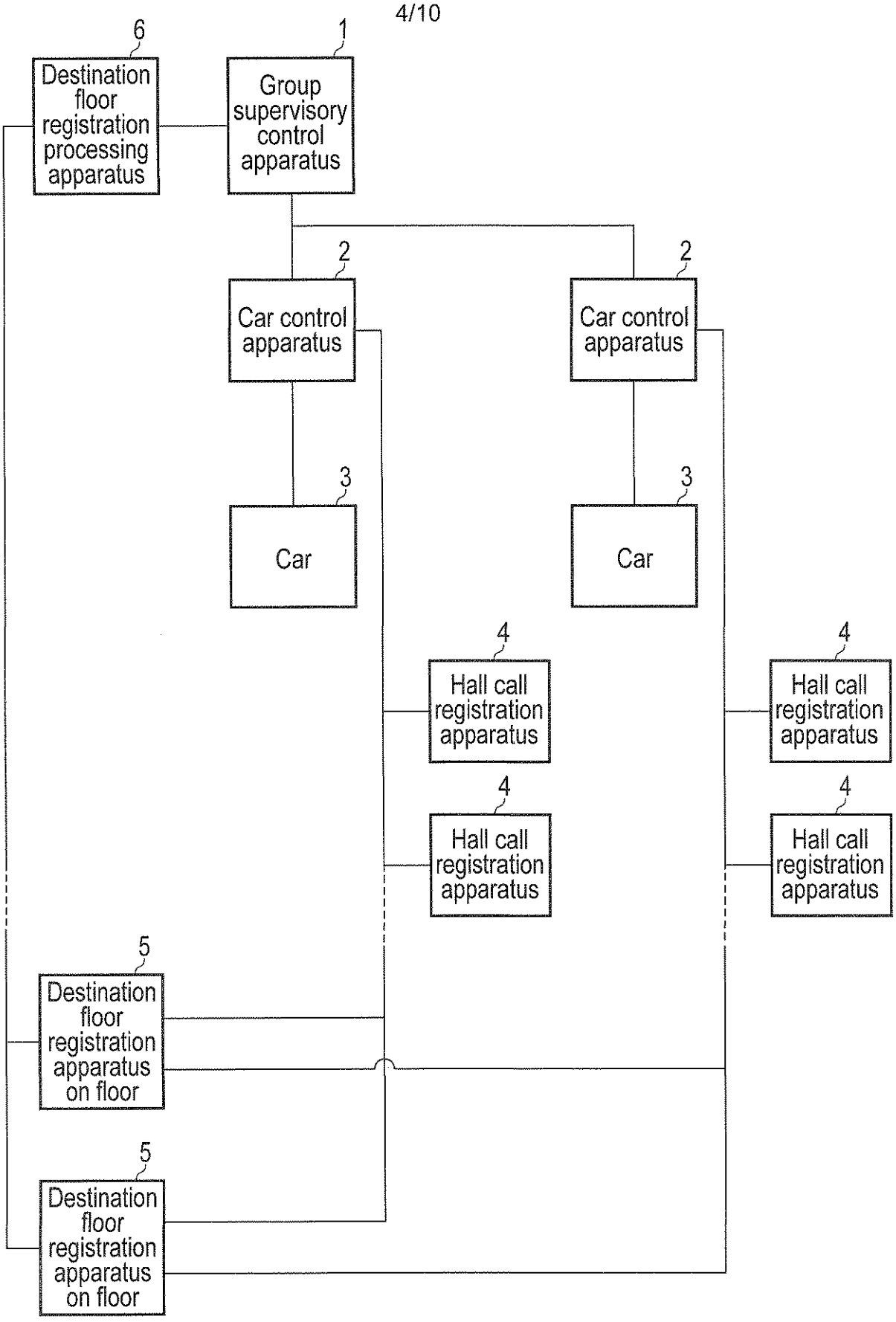
6
Destination floor registration processing apparatus
1
Group supervisory control apparatus
2
Car control apparatus
2
Car control apparatus
3
Car
3
Car
4
Hall call registration apparatus
4
Hall call registration apparatus
4
Hall call registration apparatus
4
Hall call registration apparatus
5
Destination floor registration apparatus on floor
5
Destination floor registration apparatus on floor

FIG. 6

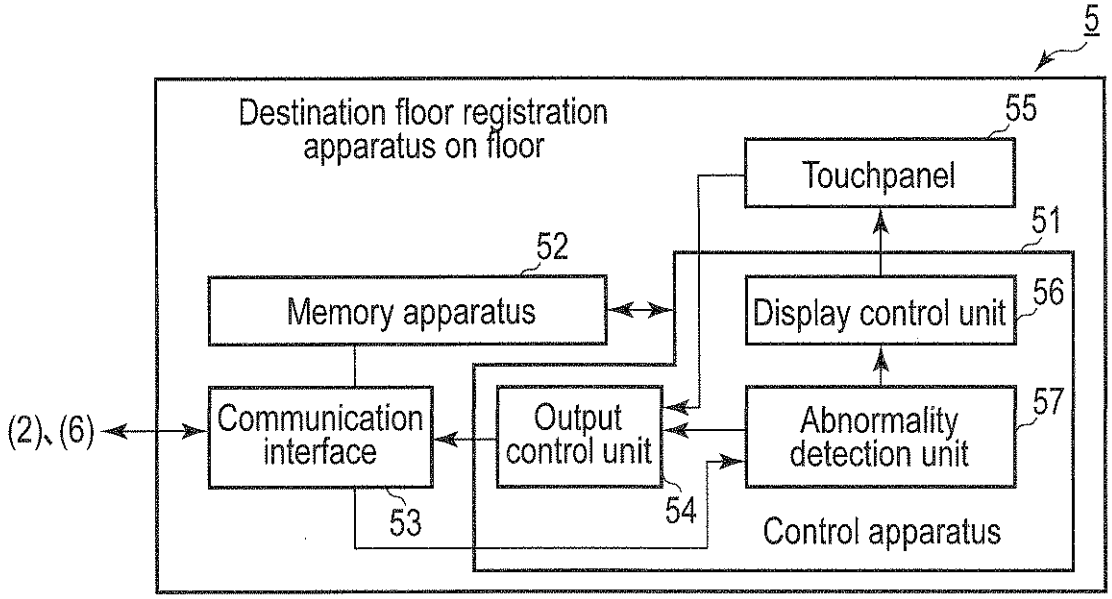

FIG. 7

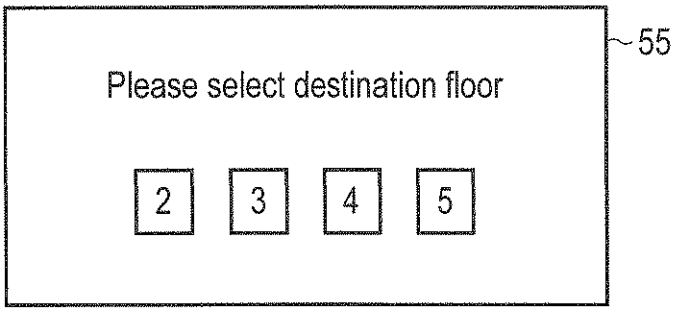

FIG. 8

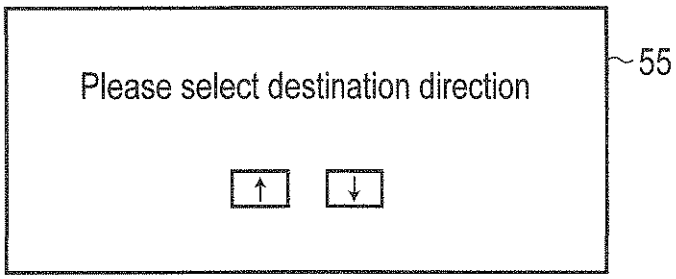

FIG. 9

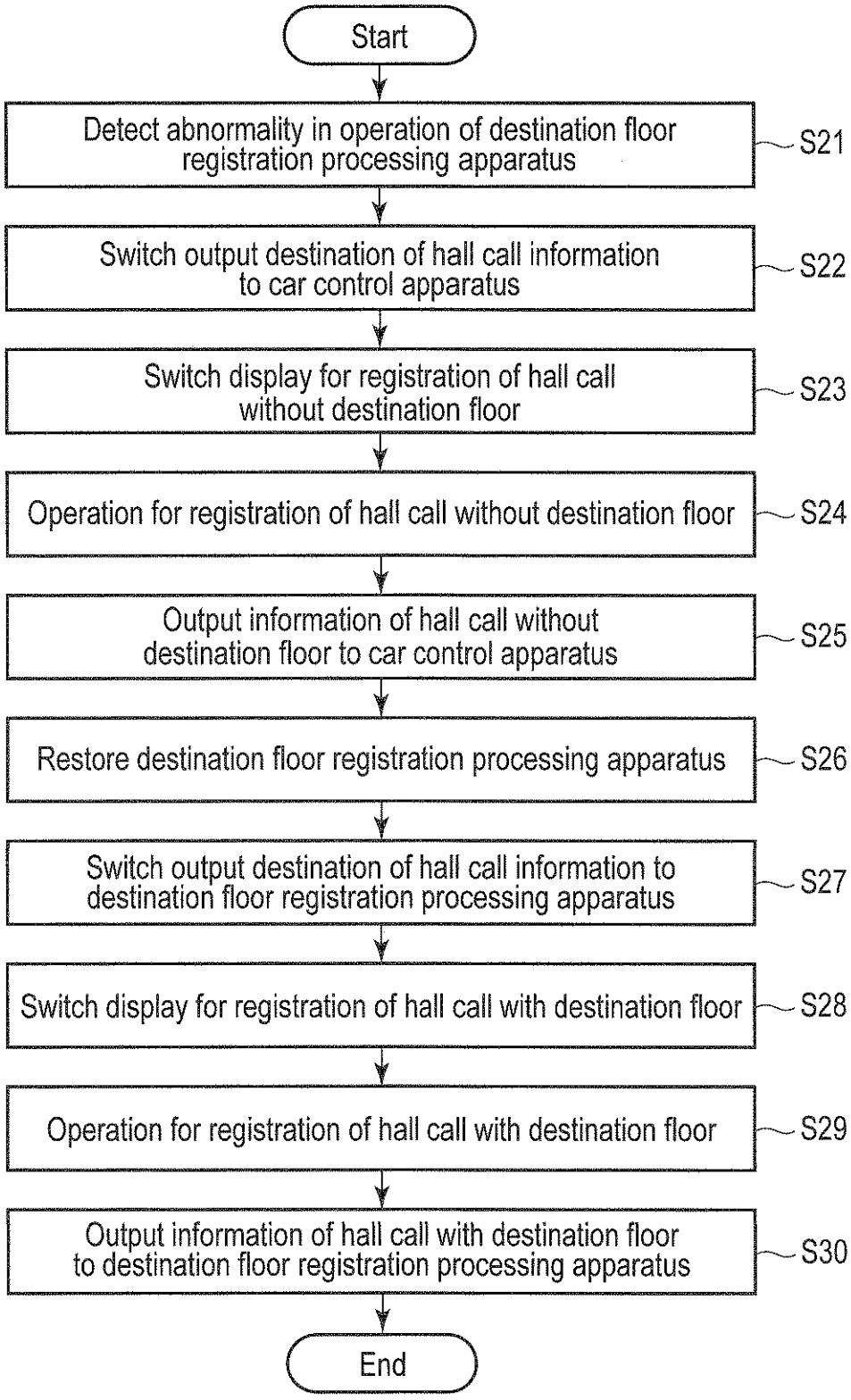
Start
Detect abnormality in operation of destination floor registration processing apparatus
S21
Switch output destination of hall call information to car control apparatus
S22
Switch display for registration of hall call without destination floor
S23
Operation for registration of hall call without destination floor
S24
Output information of hall call without destination floor to car control apparatus
S25
Restore destination floor registration processing apparatus
S26
Switch output destination of hall call information to destination floor registration processing apparatus
S27
Switch display for registration of hall call with destination floor
S28
Operation for registration of hall call with destination floor
S29
Output information of hall call with destination floor to destination floor registration processing apparatus
S30
End

FIG. 10

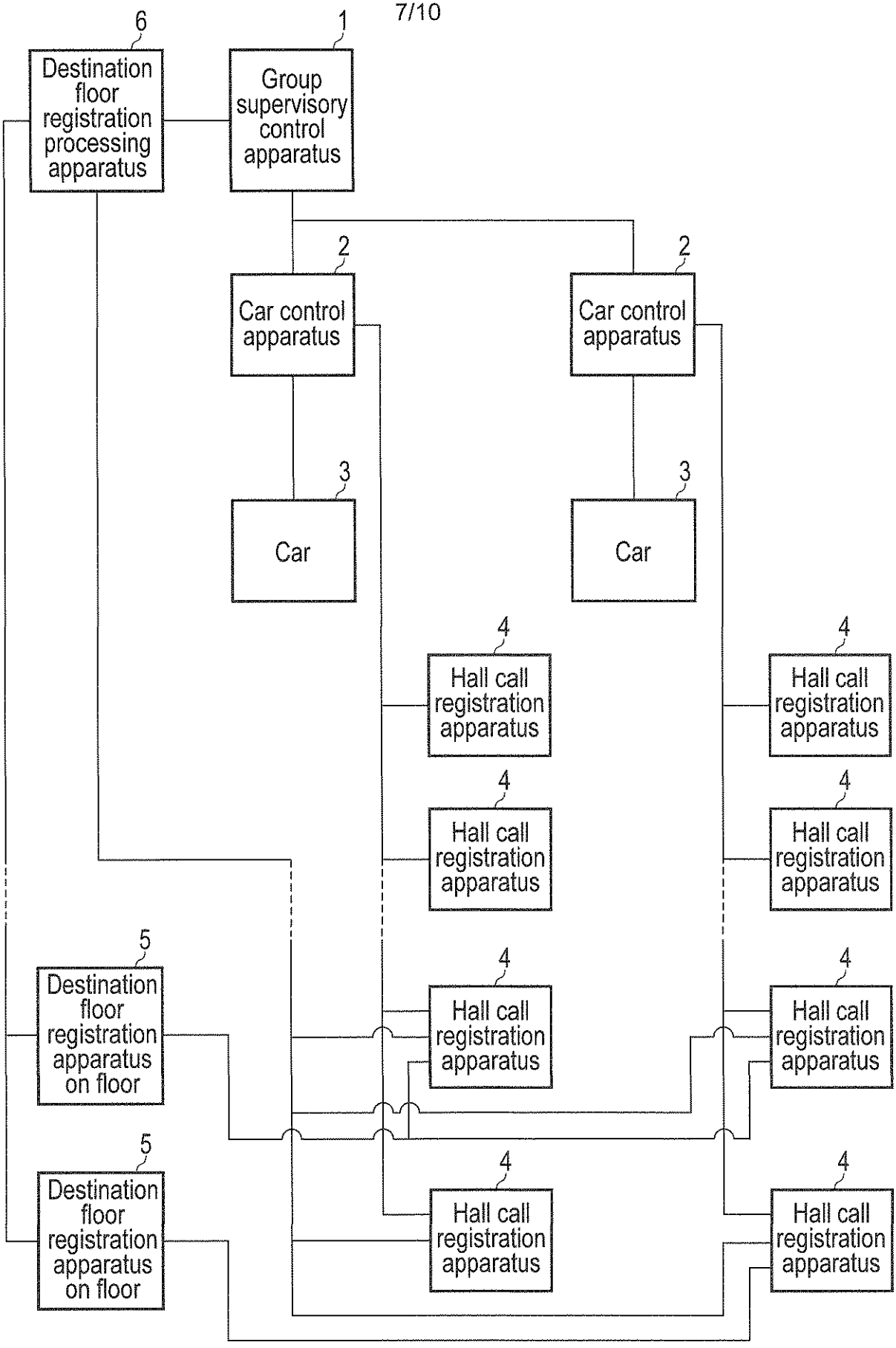
6
Destination floor registration processing apparatus
1
Group supervisory control apparatus
2
Car control apparatus
2
Car control apparatus
3
Car
3
Car
4
Hall call registration apparatus
4
Hall call registration apparatus
4
Hall call registration apparatus
4
Hall call registration apparatus
4
Hall call registration apparatus
4
Hall call registration apparatus
5
Destination floor registration apparatus on floor
5
Destination floor registration apparatus on floor
4
Hall call registration apparatus
4
Hall call registration apparatus

FIG. 11

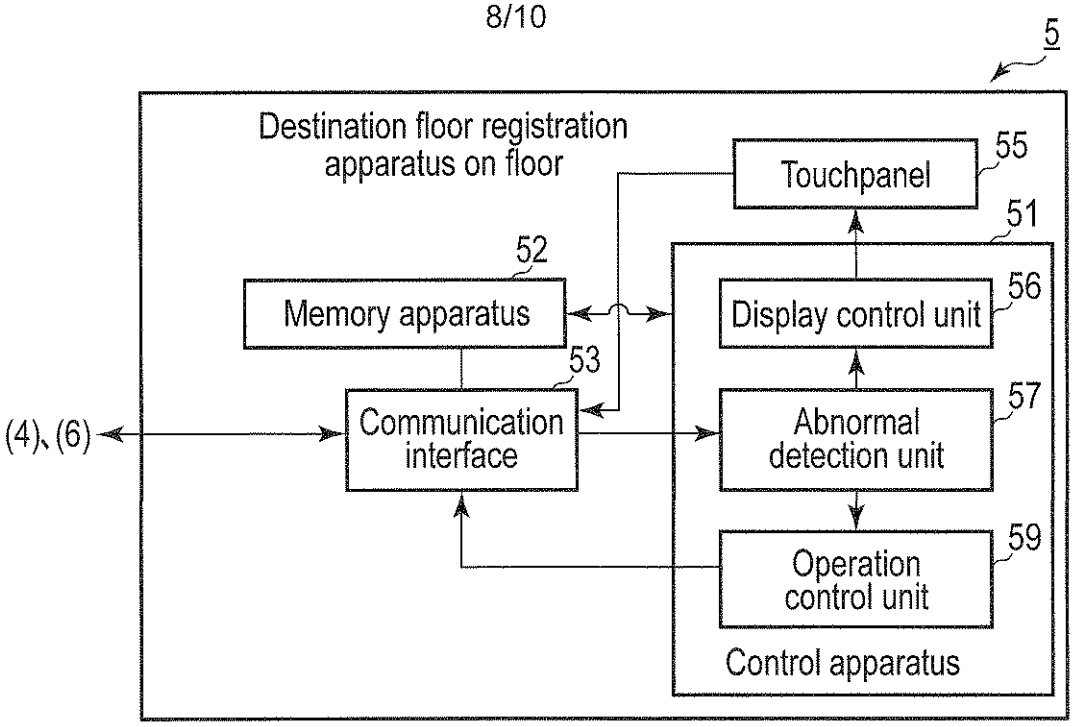
5
Destination floor registration apparatus on floor
Touchpanel
55
51
52
Memory apparatus
Display control unit
56
53
(4)、(6)
Communication interface
Abnormal detection unit
57
59
Operation control unit
Control apparatus

FIG. 12

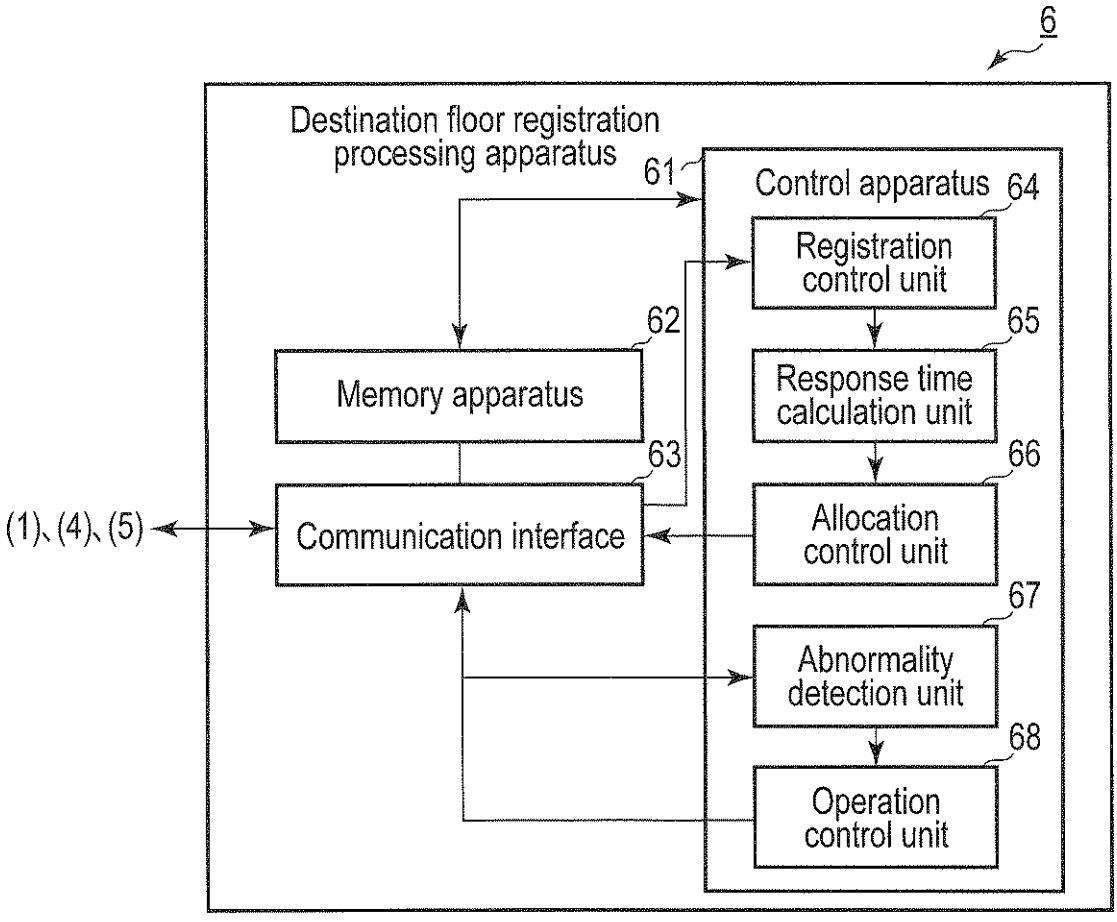
6
Destination floor registration processing apparatus
61
Control apparatus
64
Registration control unit
62
65
Memory apparatus
Response time calculation unit
63
66
(1)、(4)、(5)
Communication interface
Allocation control unit
67
Abnormality detection unit
68
Operation control unit

FIG. 13

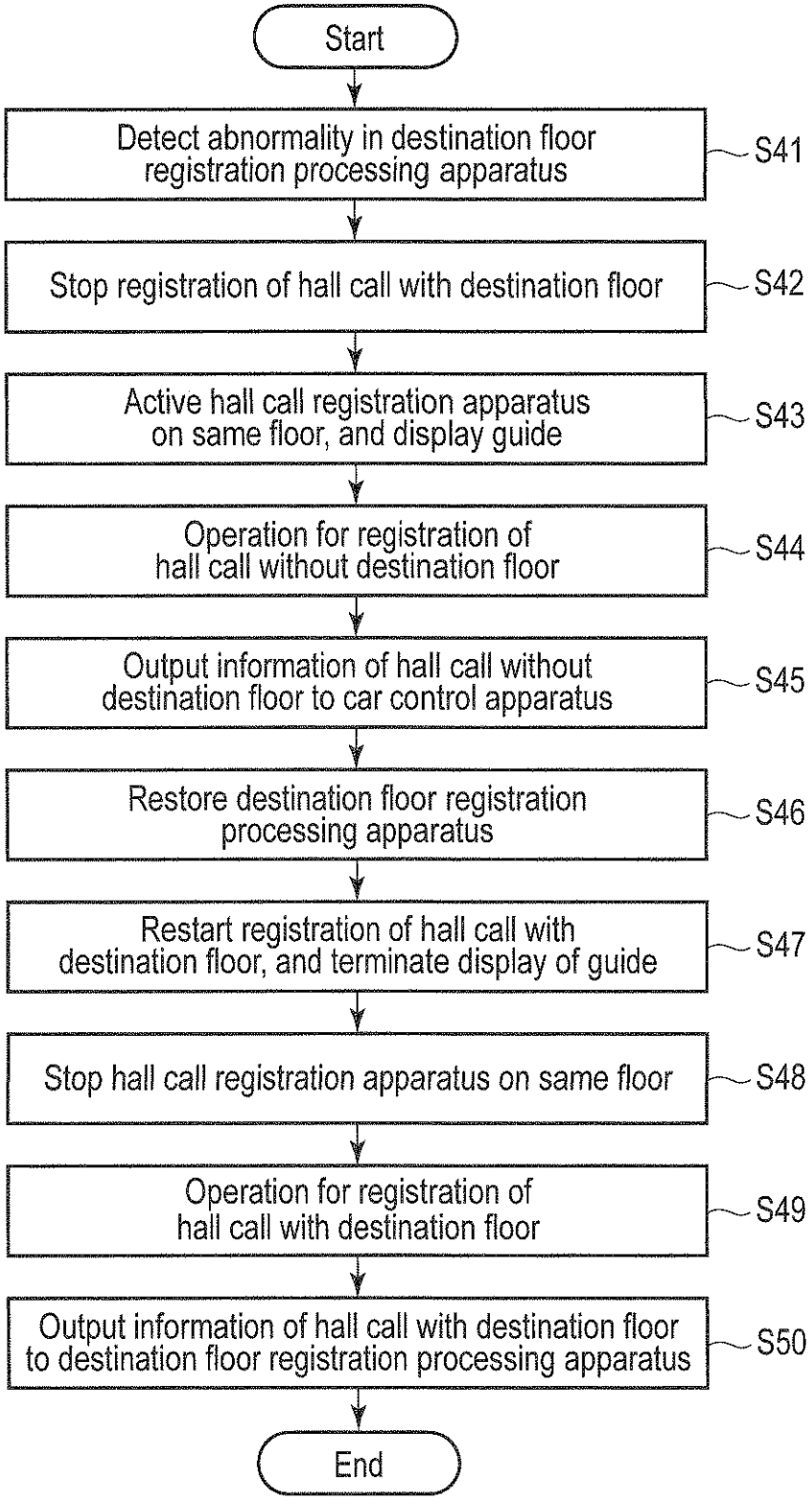
Start
Detect abnormality in destination floor registration processing apparatus
S41
Stop registration of hall call with destination floor
S42
Active hall call registration apparatus on same floor, and display guide
S43
Operation for registration of hall call without destination floor
S44
Output information of hall call without destination floor to car control apparatus
S45
Restore destination floor registration processing apparatus
S46
Restart registration of hall call with destination floor, and terminate display of guide
S47
Stop hall call registration apparatus on same floor
S48
Operation for registration of hall call with destination floor
S49
Output information of hall call with destination floor to destination floor registration processing apparatus
S50
End

FIG. 14

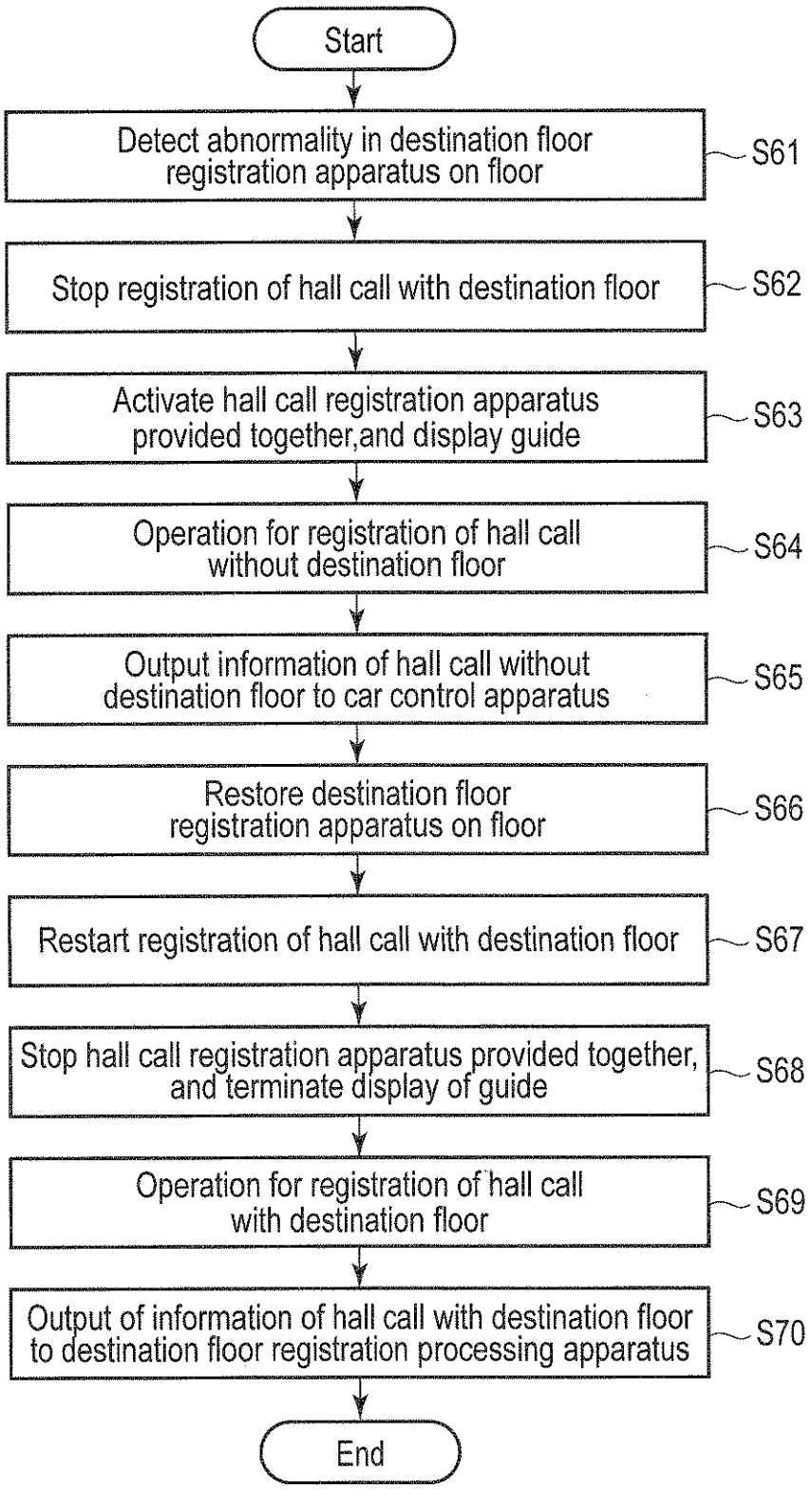
Start
Detect abnormality in destination floor registration apparatus on floor
S61
Stop registration of hall call with destination floor
S62
Activate hall call registration apparatus provided together,and display guide
S63
Operation for registration of hall call without destination floor
S64
Output information of hall call without destination floor to car control apparatus
S65
Restore destination floor registration apparatus on floor
S66
Restart registration of hall call with destination floor
S67
Stop hall call registration apparatus provided together, and terminate display of guide
S68
Operation for registration of hall call with destination floor
S69
Output of information of hall call with destination floor to destination floor registration processing apparatus
S70
End

FIG. 15