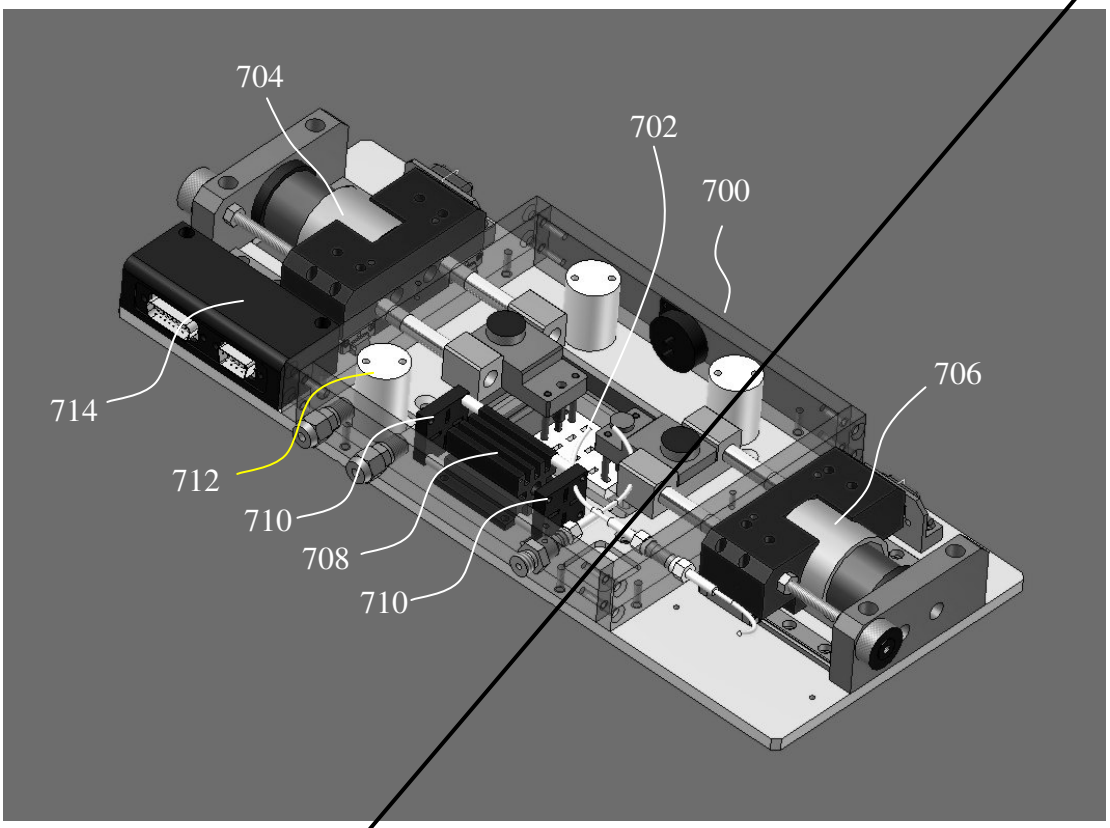

Figure 7

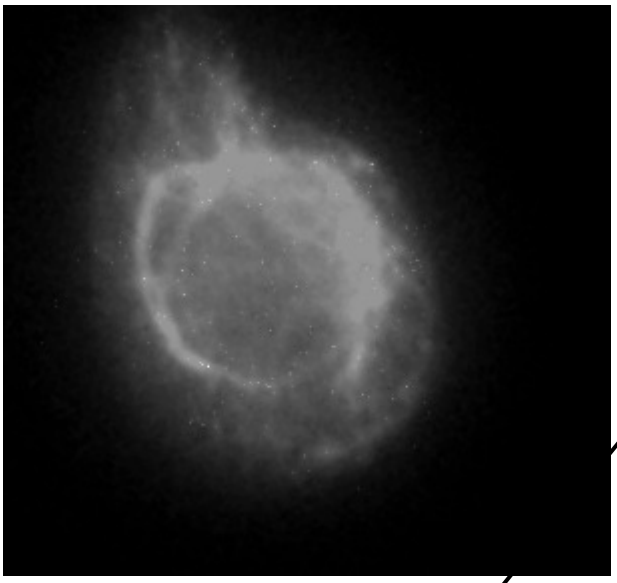

Figure 19(a)

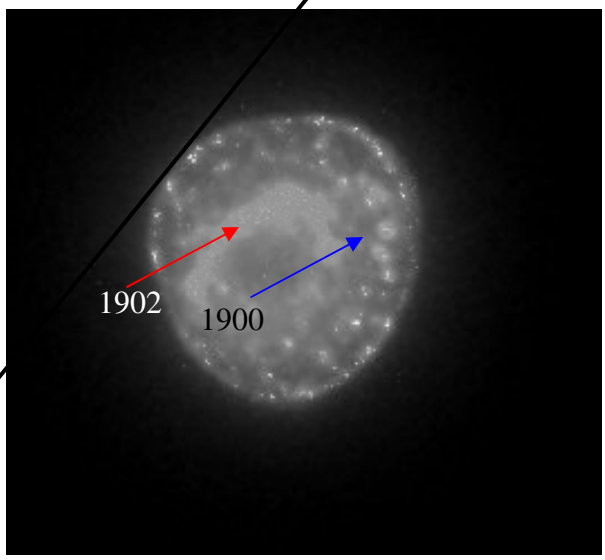

Figure 19(b)

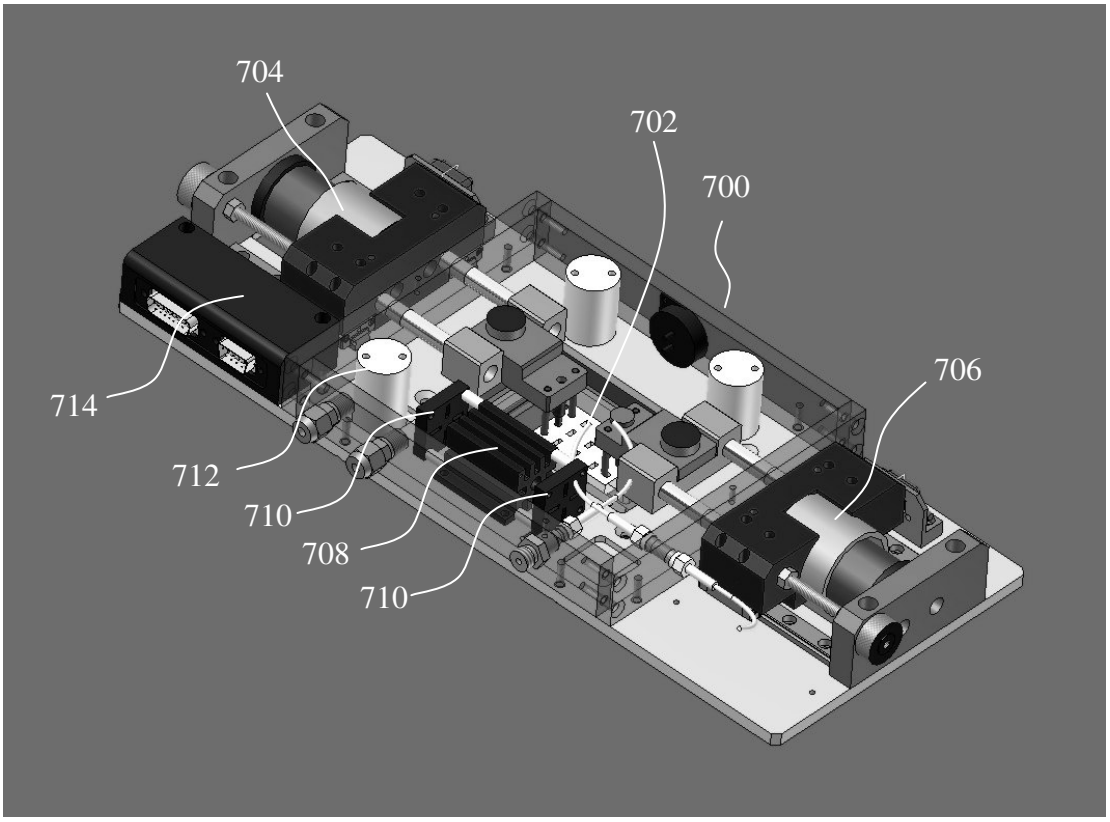

Figure 7

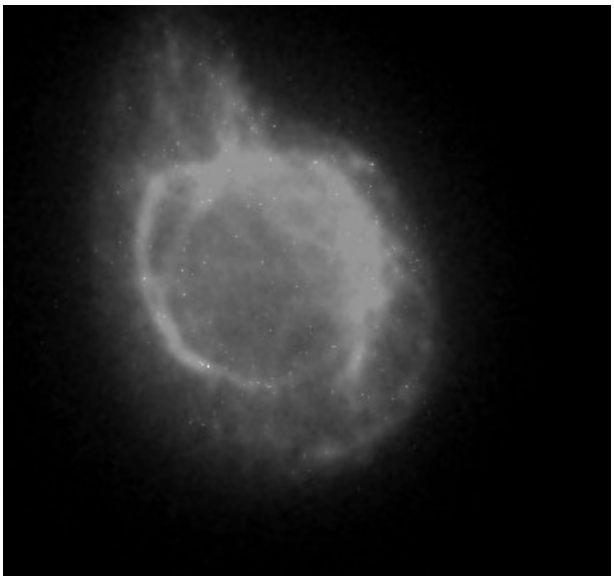

Figure 19(a)

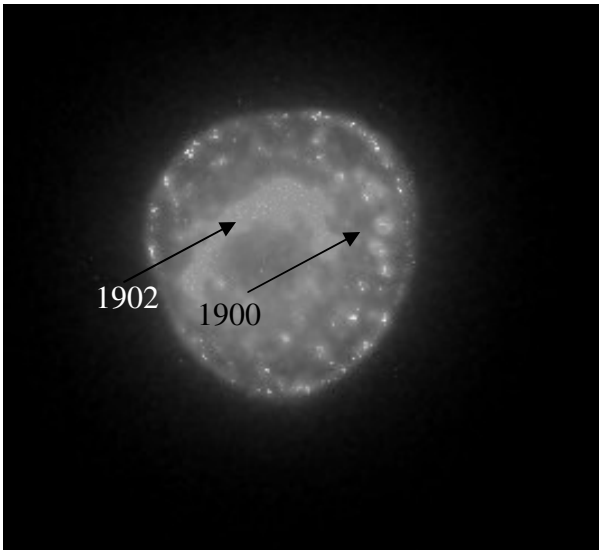

Figure 19(b)