
100
101
102
103
analysis filterbank
non linear processing
synthesis filterbank

Fig. 1

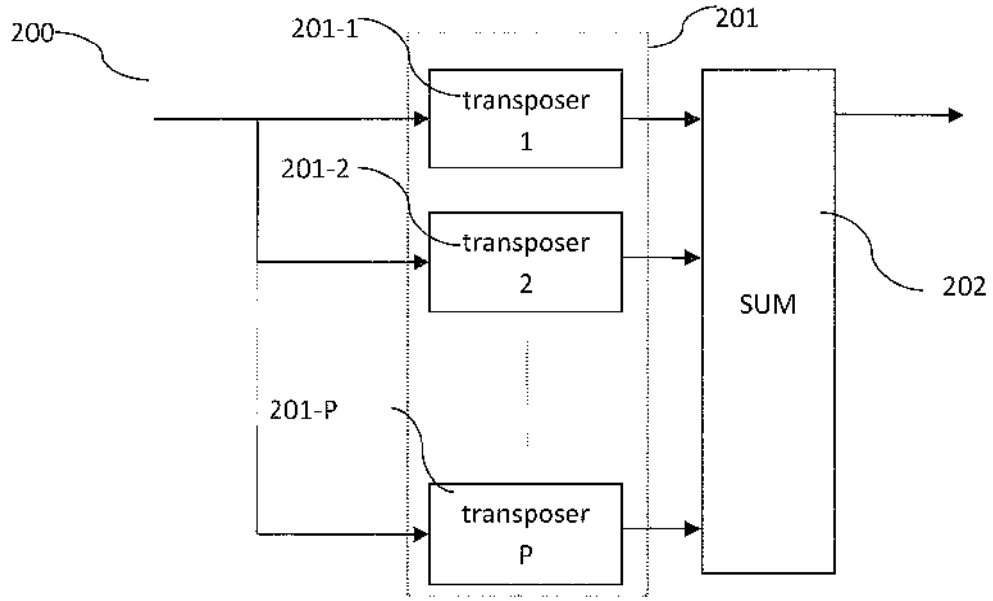
200
201-1
201
transposer 1
201-2
transposer 2
SUM
202
201-P
transposer P

Fig. 2

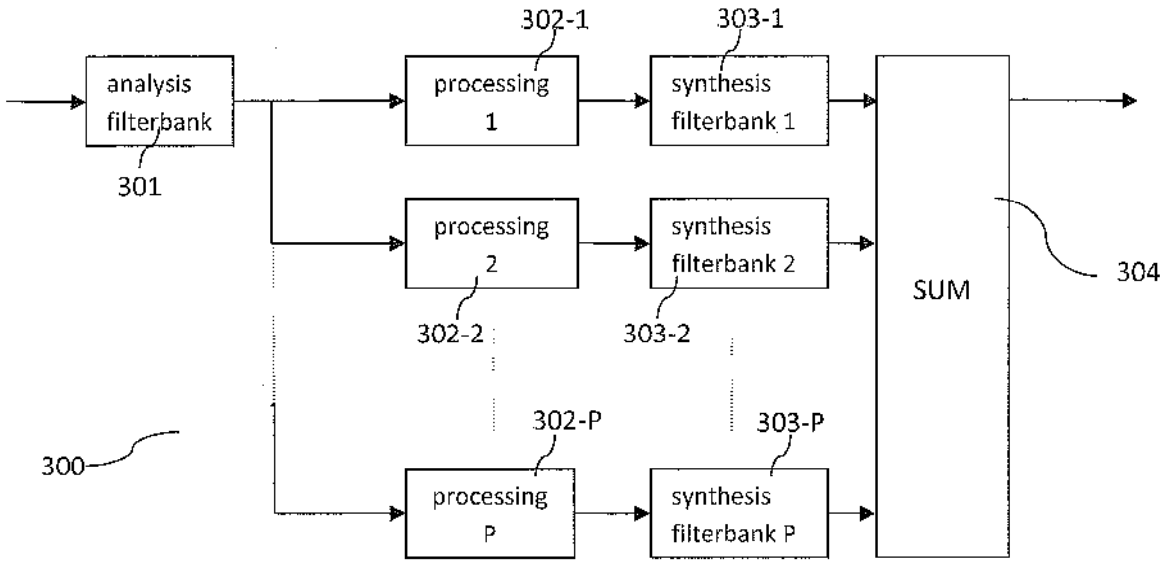
analysis filterbank
301
processing 1
302-1
synthesis filterbank 1
303-1
processing 2
302-2
synthesis filterbank 2
303-2
processing P
302-P
synthesis filterbank P
303-P
SUM
304
300

Fig. 3

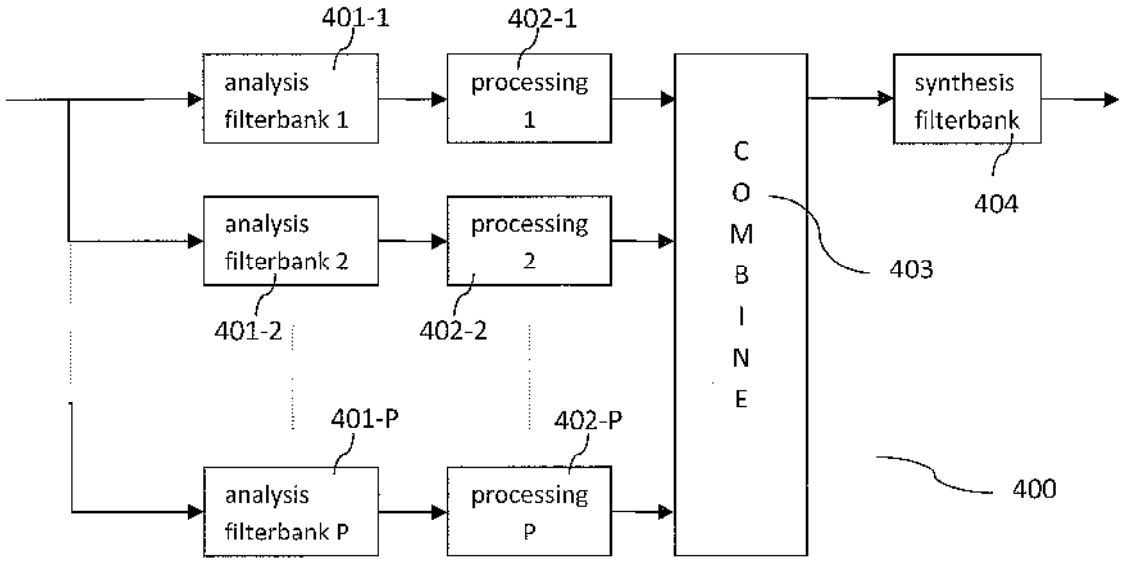
analysis filterbank 1
401-1
processing 1
402-1
analysis filterbank 2
401-2
processing 2
402-2
analysis filterbank P
401-P
processing P
402-P
COMBINE
403
synthesis filterbank
404
400

Fig. 4

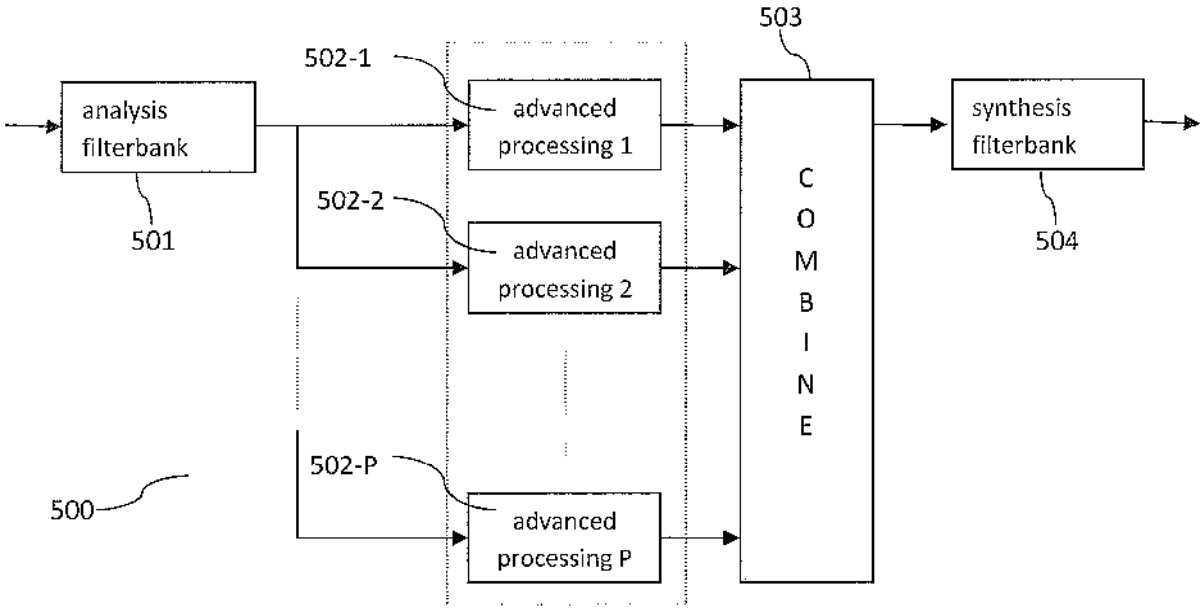
503
502-1
analysis filterbank
advanced processing 1
C O M B I N E
synthesis filterbank
502-2
advanced processing 2
501
504
500
502-P
advanced processing P

Fig. 5

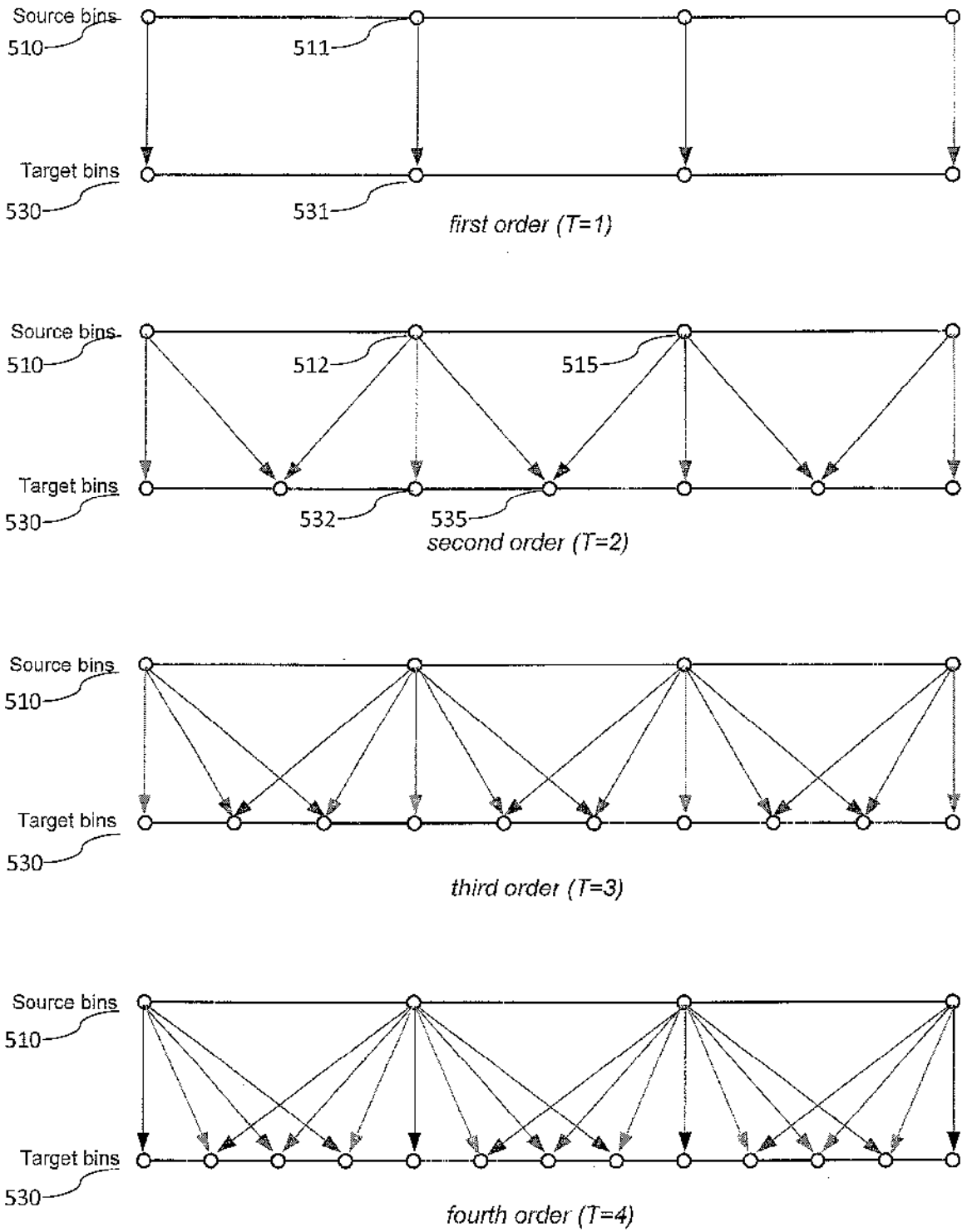
Source bins
510
511
Target bins
530
531
first order (T=1)
Source bins
510
512
515
Target bins
530
532
535
second order (T=2)
Source bins
510
Target bins
530
third order (T=3)
Source bins
510
Target bins
530
fourth order (T=4)

Fig. 5b

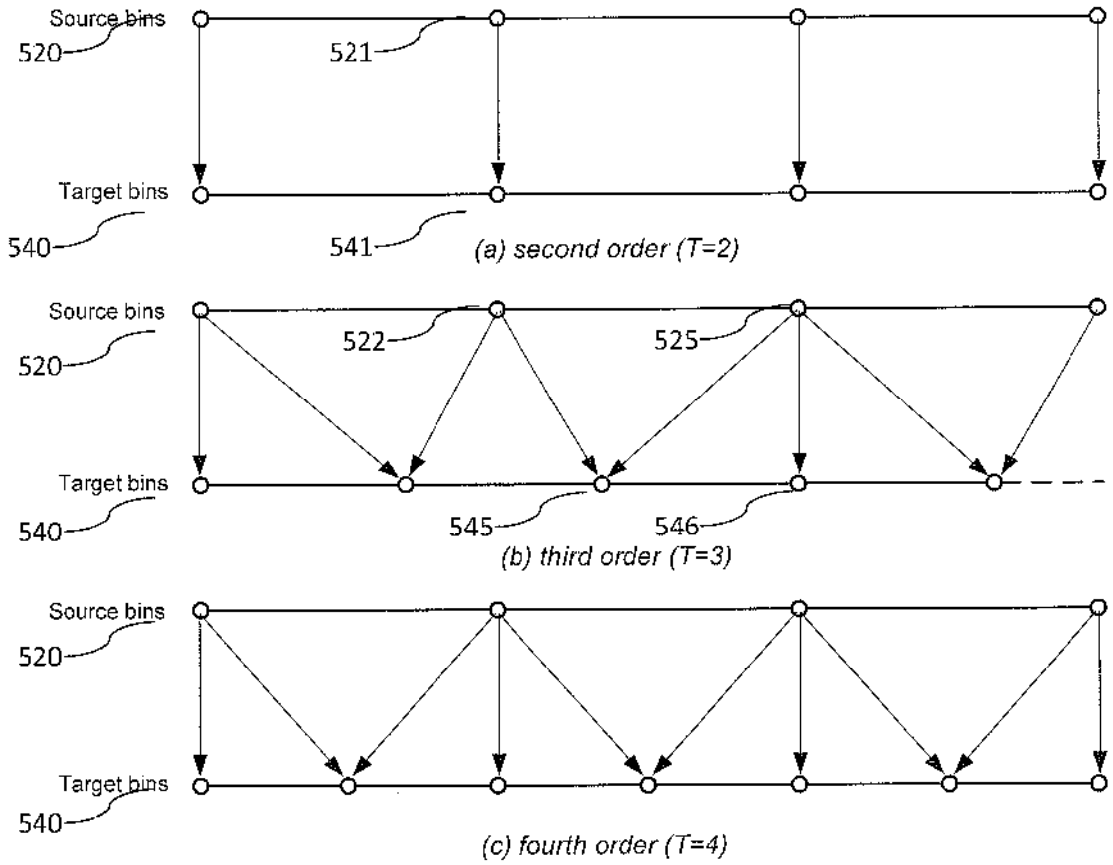
Source bins
520
521
Target bins
540
541
(a) second order (T=2)
Source bins
520
522
525
Target bins
540
545
546
(b) third order (T=3)
Source bins
520
Target bins
540
(c) fourth order (T=4)

Fig. 5c

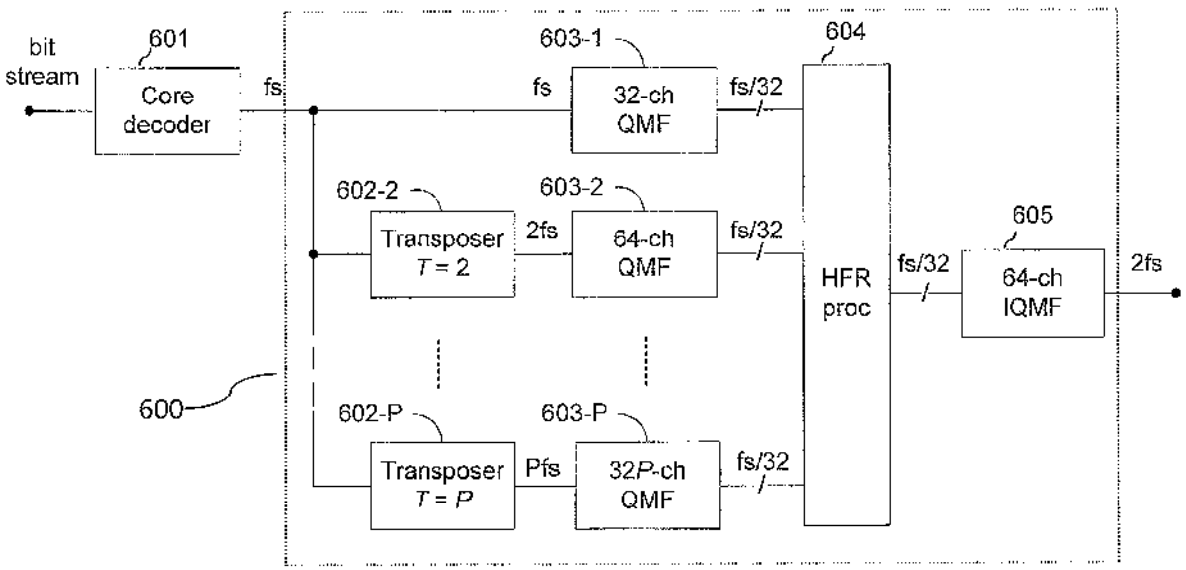
bit stream
601
Core decoder
fs
603-1
fs
32-ch QMF
fs/32
604
602-2
603-2
Transposer T = 2
2fs
64-ch QMF
fs/32
HFR proc
fs/32
605
64-ch IQMF
2fs
600
602-P
603-P
Transposer T = P
Pfs
32P-ch QMF
fs/32

Fig. 6

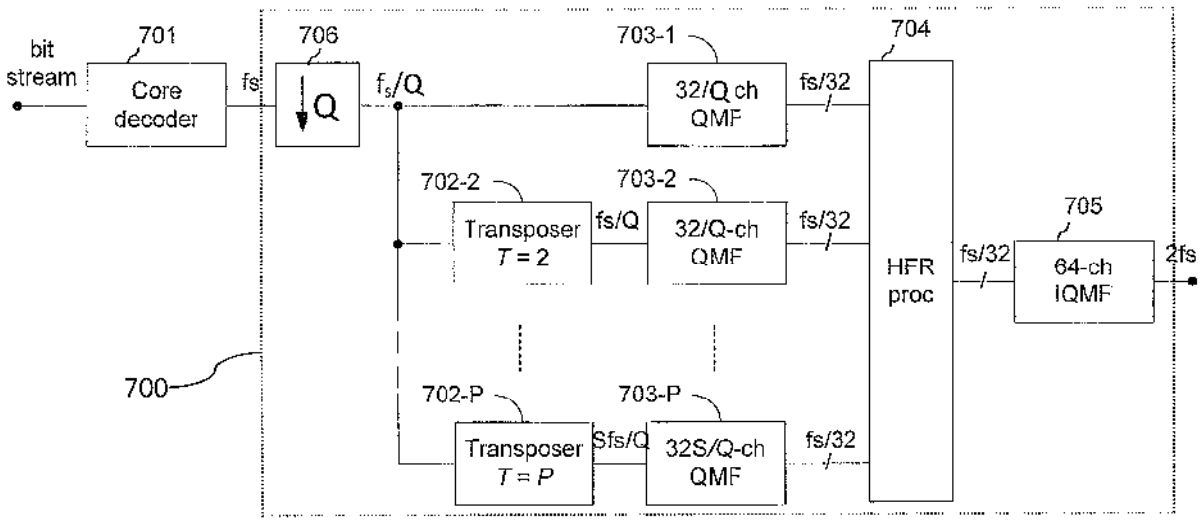

Fig. 7

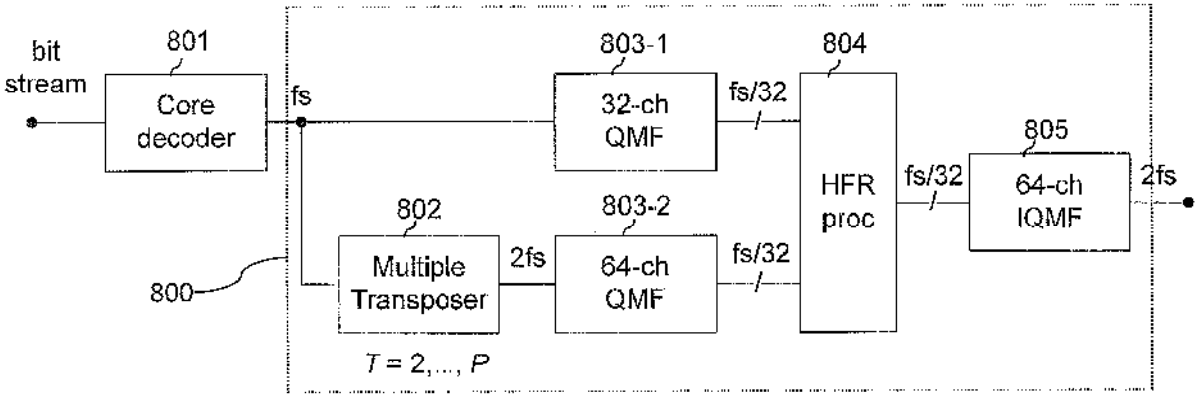

Fig. 8

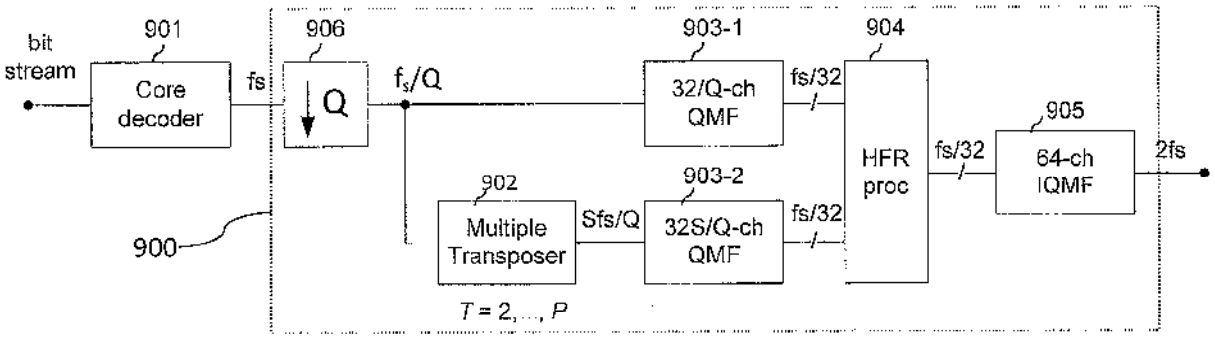

Fig. 9

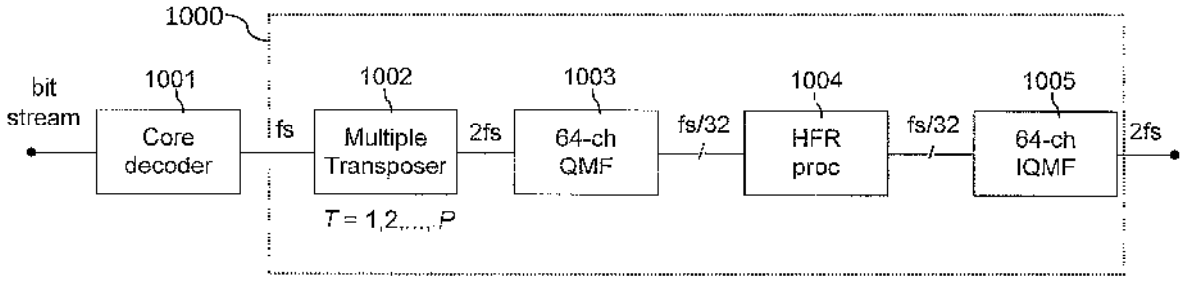
1000
bit stream
1001
Core decoder
fs
1002
Multiple Transposer
T = 1,2,..., P
2fs
1003
64-ch QMF
fs/32
1004
HFR proc
fs/32
1005
64-ch IQMF
2fs

Fig. 10

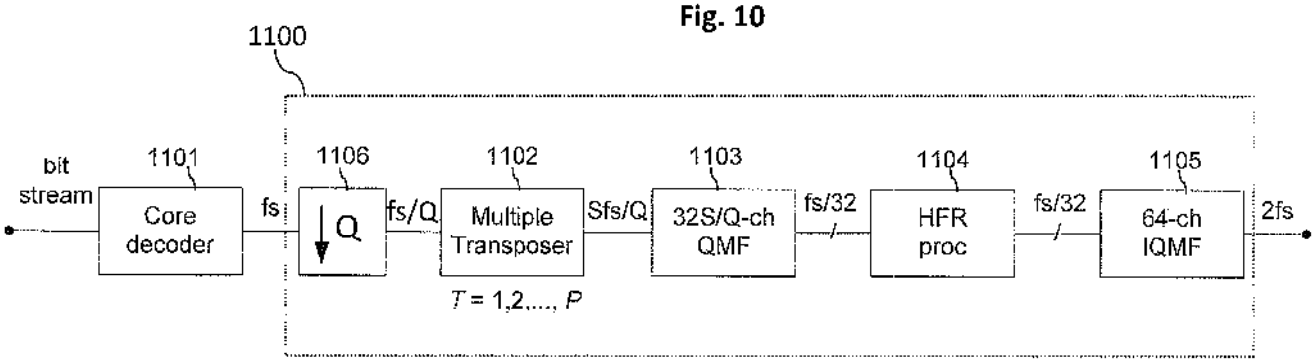
1100
bit stream
1101
Core decoder
fs
1106
Q
fs/Q
1102
Multiple Transposer
T = 1,2,..., P
Sfs/Q
1103
32S/Q-ch QMF
fs/32
1104
HFR proc
fs/32
1105
64-ch IQMF
2fs

Fig. 11

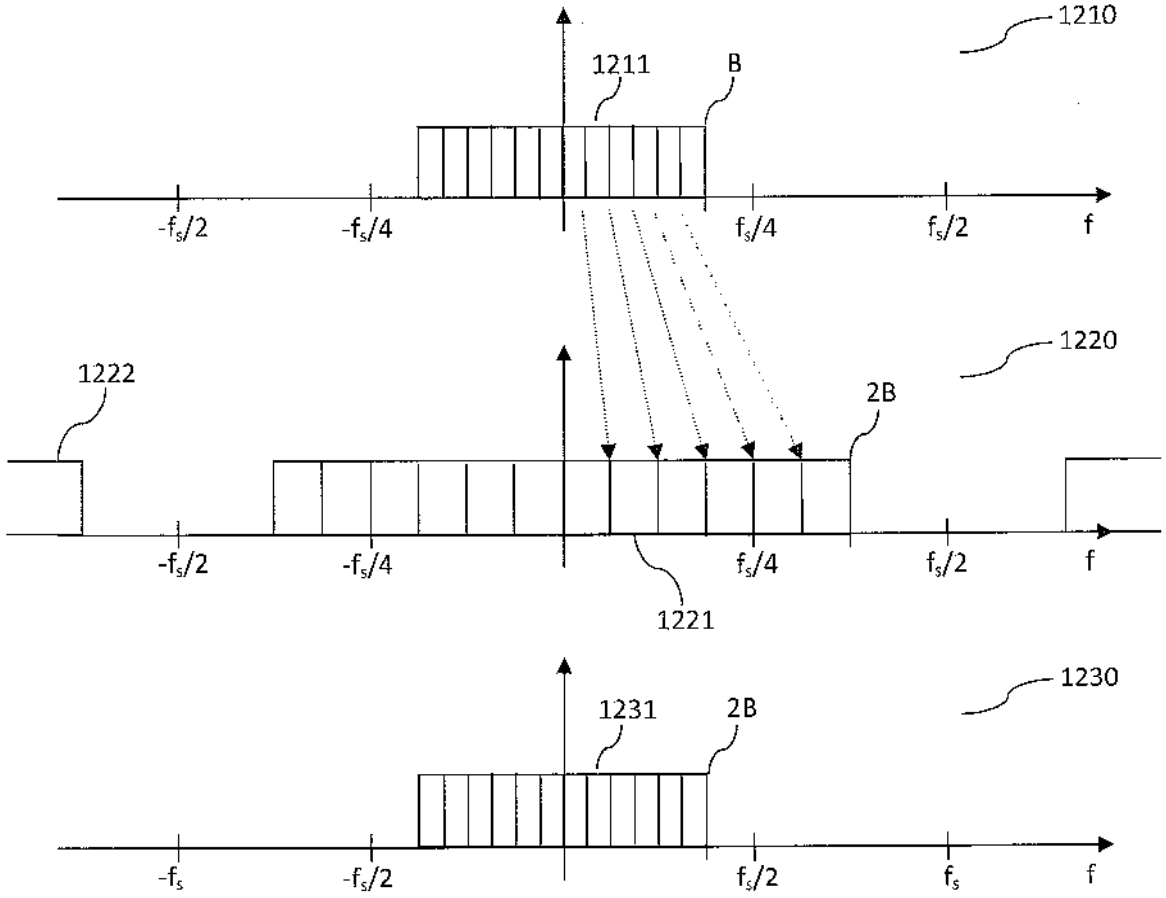
1210
1211
B
-fs/2
-fs/4
fs/4
fs/2
f
1220
1222
2B
-fs/2
-fs/4
fs/4
fs/2
f
1221
1230
1231
2B
-fs
-fs/2
fs/2
fs
f

Fig. 12a

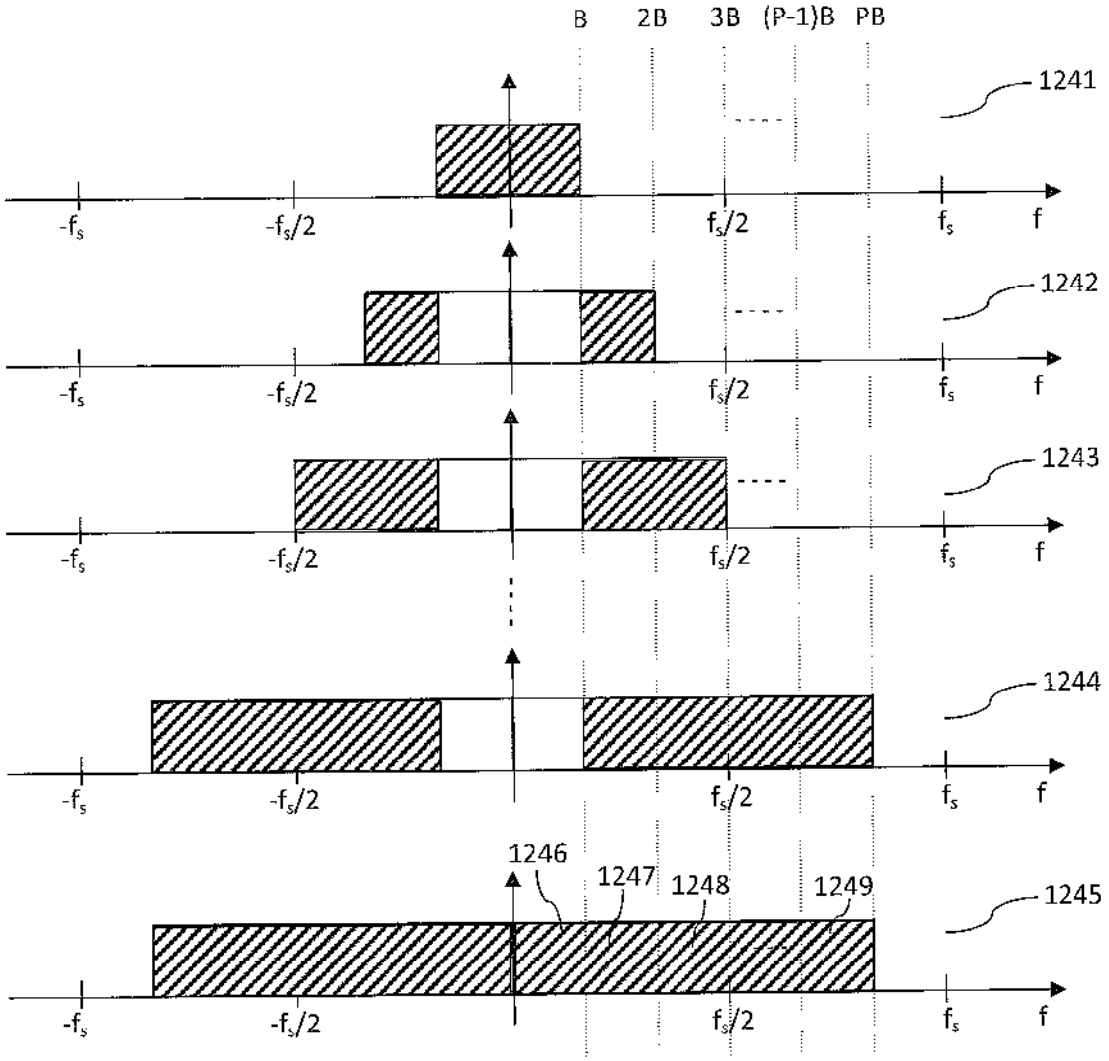
B
2B
3B
(P-1)B
PB
1241
1242
1243
1244
1245
1246
1247
1248
1249
-fs
-fs/2
fs/2
fs
f

Fig. 12b

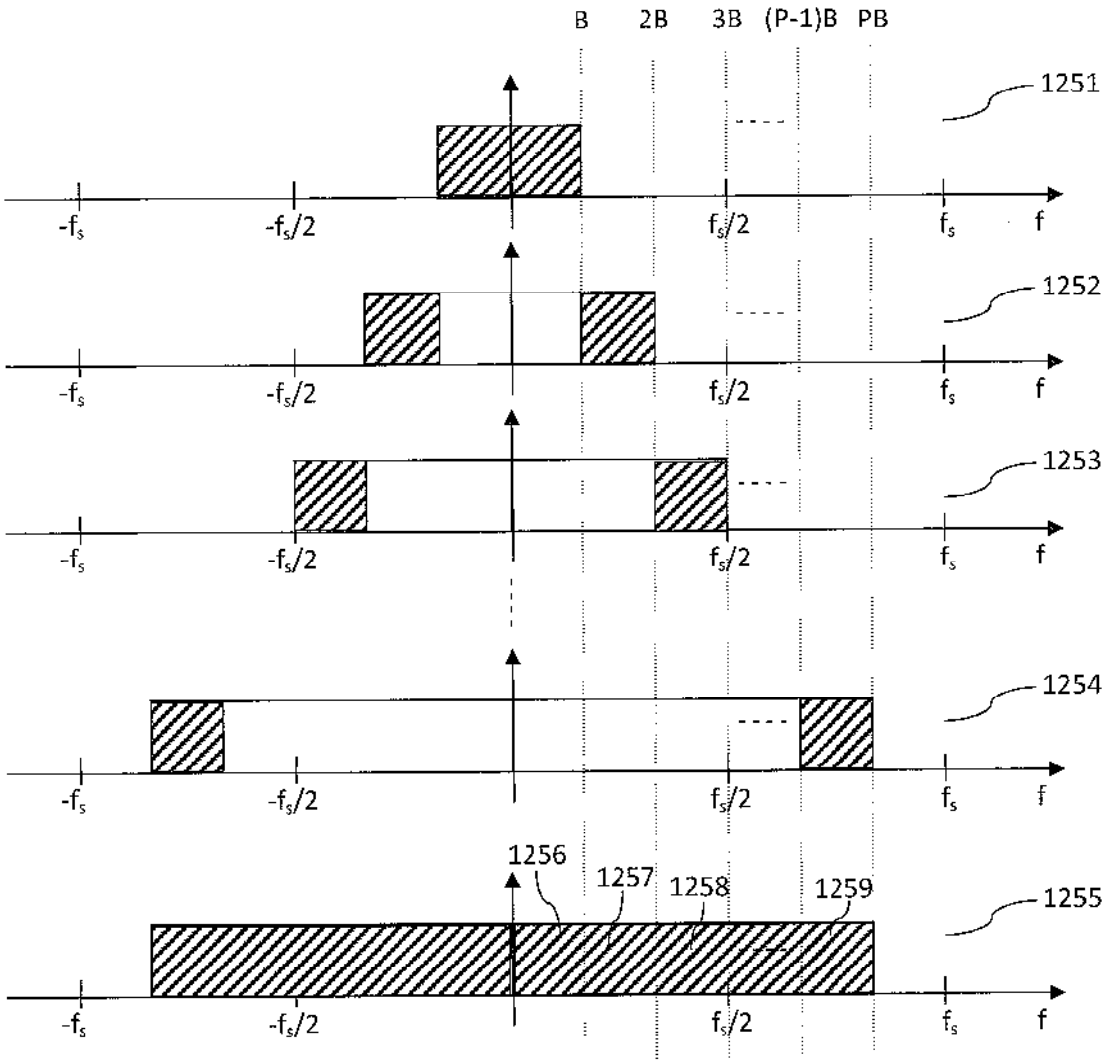
B
2B
3B
(P-1)B
PB
1251
1252
1253
1254
1255
1256
1257
1258
1259
-fs
-fs/2
fs/2
fs
f

Fig. 12c

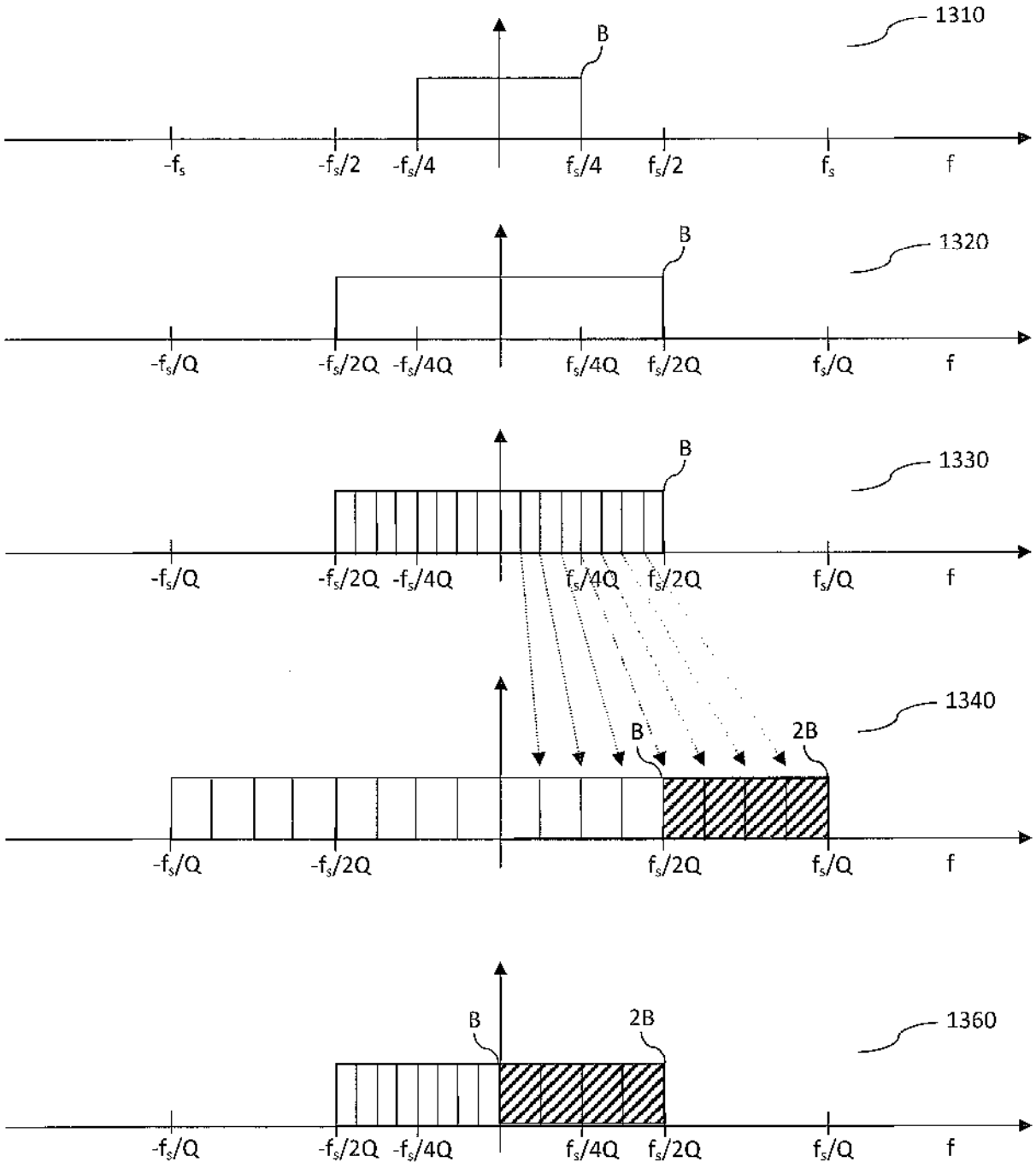
1310
B
-fs
-fs/2
-fs/4
fs/4
fs/2
fs
f
1320
B
-fs/Q
-fs/2Q
-fs/4Q
fs/4Q
fs/2Q
fs/Q
f
1330
B
-fs/Q
-fs/2Q
-fs/4Q
fs/4Q
fs/2Q
fs/Q
f
1340
B
2B
-fs/Q
-fs/2Q
fs/2Q
fs/Q
f
1360
B
2B
-fs/Q
-fs/2Q
-fs/4Q
fs/4Q
fs/2Q
fs/Q
f

Fig. 13

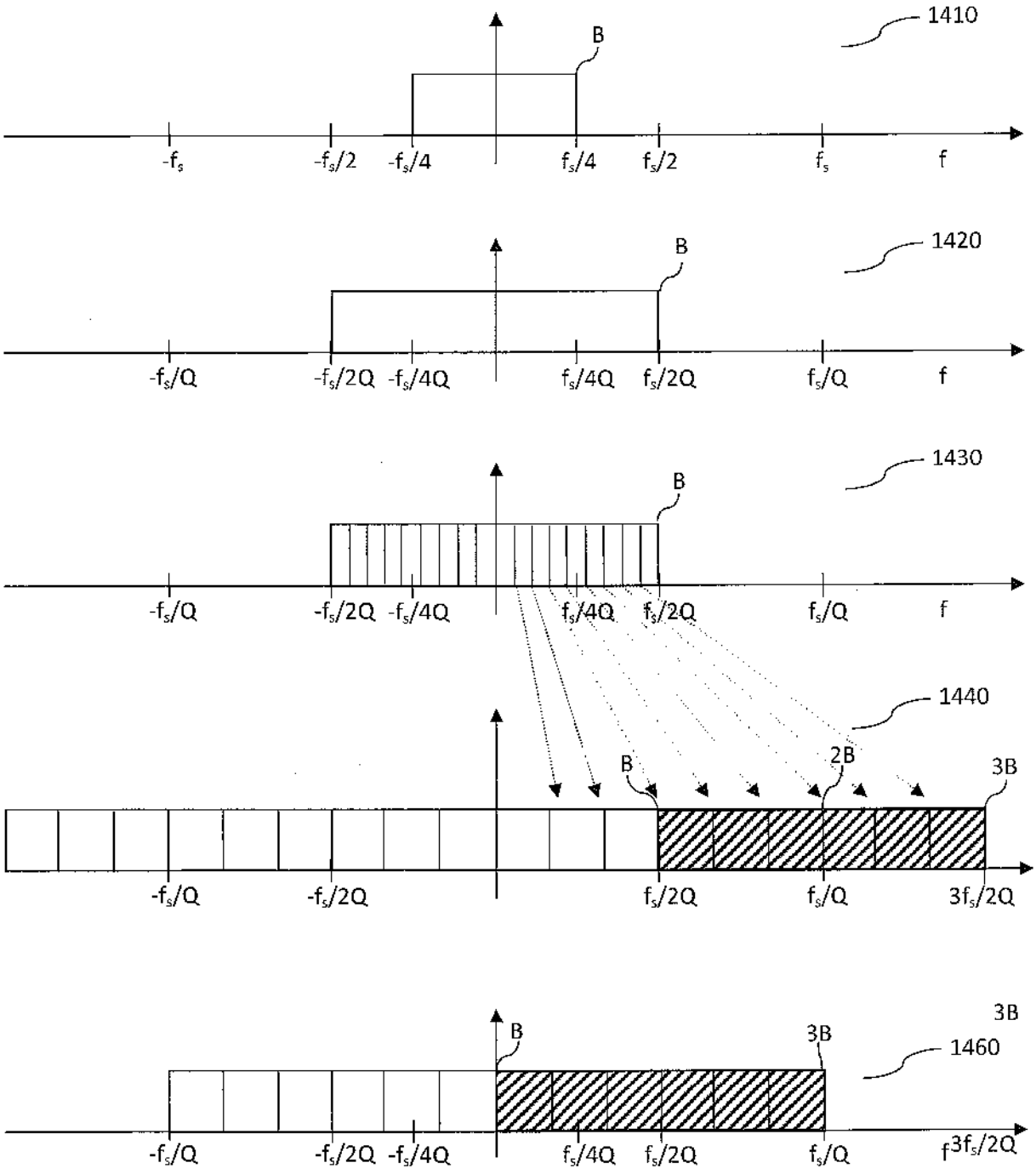
1410
B
-fs
-fs/2
-fs/4
fs/4
fs/2
fs
f
1420
B
-fs/Q
-fs/2Q
-fs/4Q
fs/4Q
fs/2Q
fs/Q
f
1430
B
-fs/Q
-fs/2Q
-fs/4Q
fs/4Q
fs/2Q
fs/Q
f
1440
B
2B
3B
-fs/Q
-fs/2Q
fs/2Q
fs/Q
3fs/2Q
3B
1460
B
3B
-fs/Q
-fs/2Q
-fs/4Q
fs/4Q
fs/2Q
fs/Q
f
3fs/2Q

Fig. 14

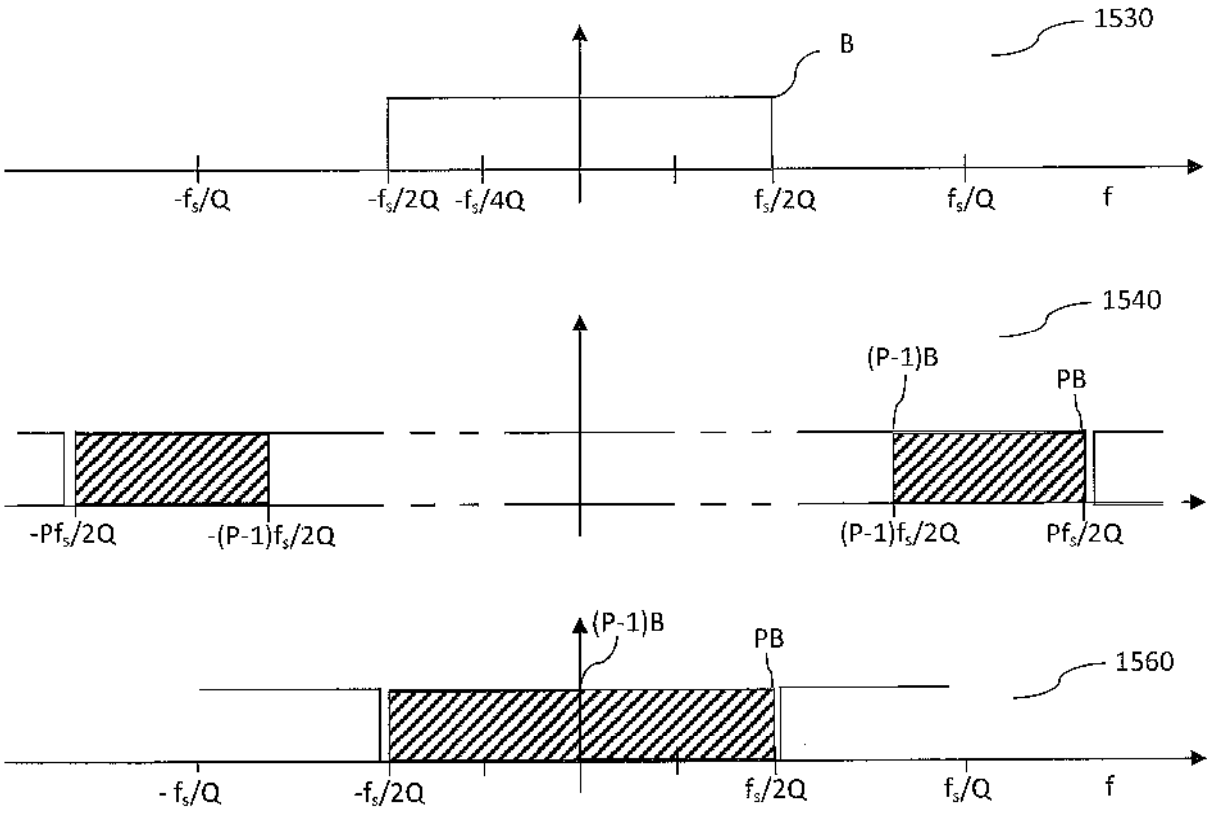
1530
B
-f_s/Q
-f_s/2Q
-f_s/4Q
f_s/2Q
f_s/Q
f
1540
(P-1)B
PB
-Pf_s/2Q
-(P-1)f_s/2Q
(P-1)f_s/2Q
Pf_s/2Q
(P-1)B
PB
1560
- f_s/Q
-f_s/2Q
f_s/2Q
f_s/Q
f

Fig. 15

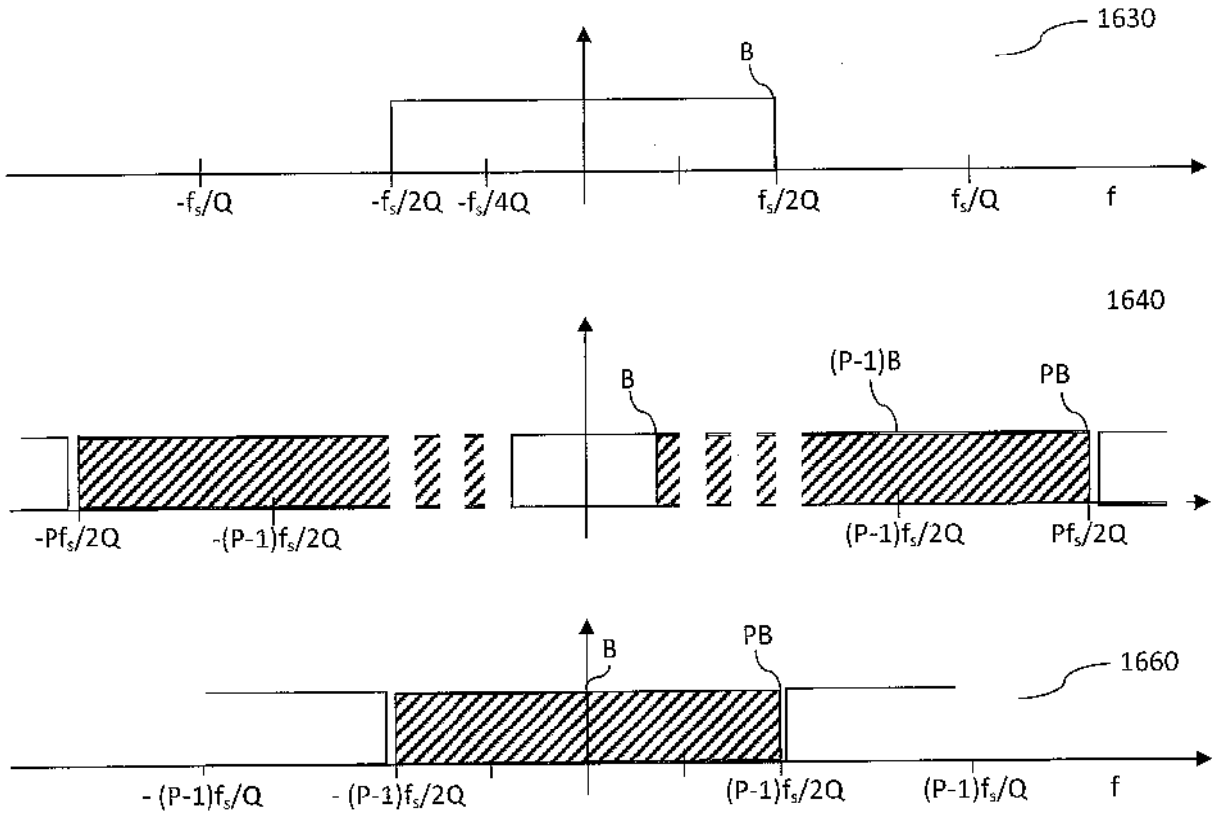
1630
B
-f_s/Q
-f_s/2Q
-f_s/4Q
f_s/2Q
f_s/Q
f
1640
B
(P-1)B
PB
-Pf_s/2Q
-(P-1)f_s/2Q
(P-1)f_s/2Q
Pf_s/2Q
B
PB
1660
- (P-1)f_s/Q
- (P-1)f_s/2Q
(P-1)f_s/2Q
(P-1)f_s/Q
f

Fig. 16

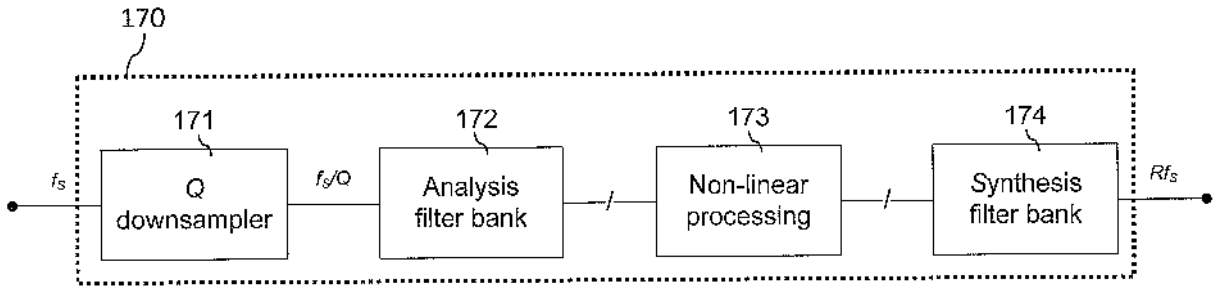
170
171
172
173
174
f_S
Q
downsampler
f_S/Q
Analysis
filter bank
Non-linear
processing
Synthesis
filter bank
Rf_S

Fig. 17