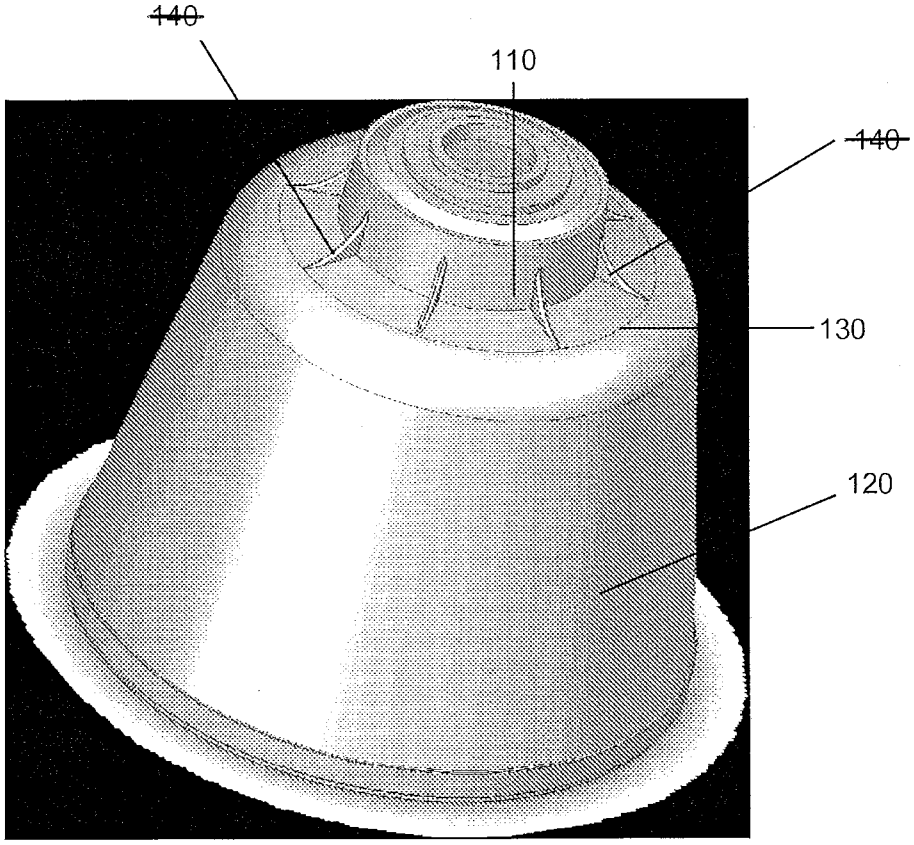

Figure 5A

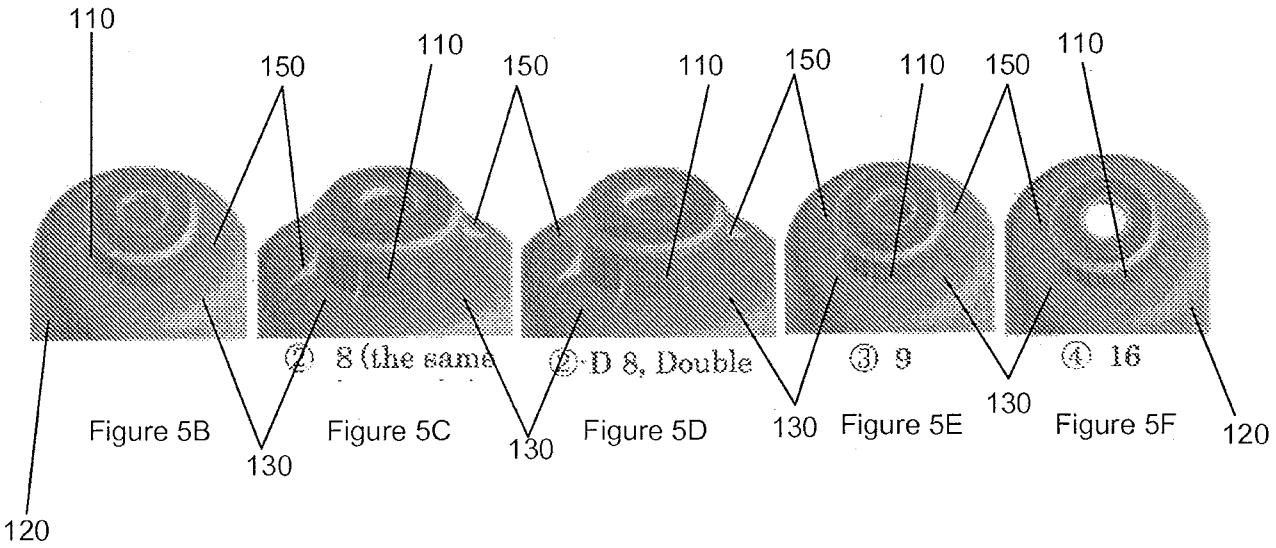

Figure 5B Figure 5C Figure 5D Figure 5E Figure 5F

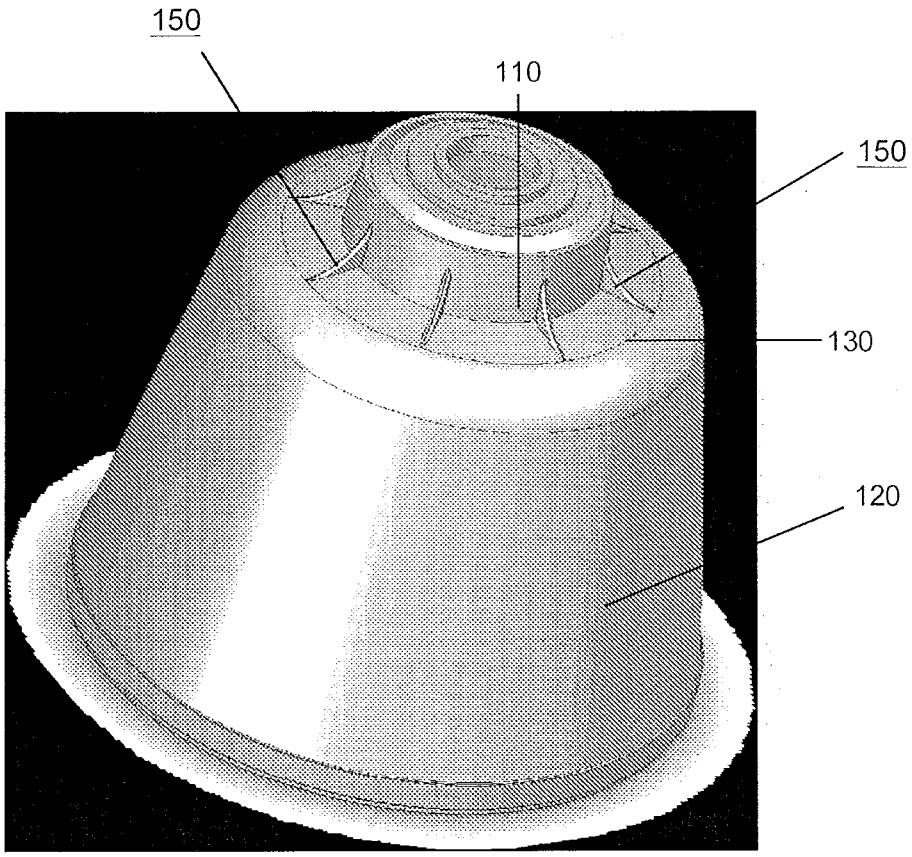

Figure 5A

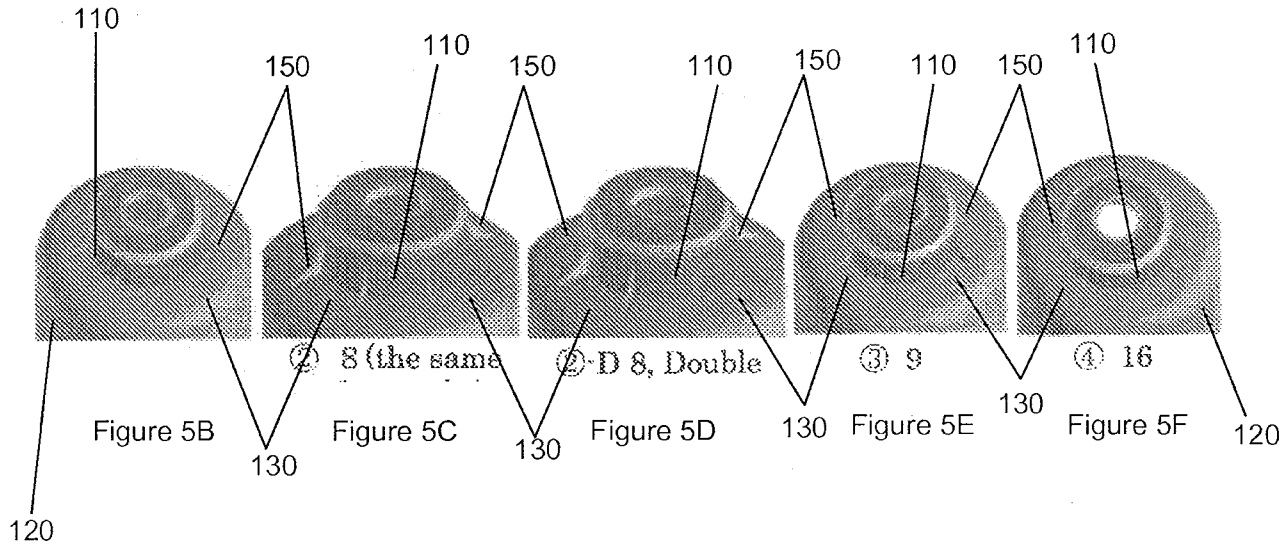

Figure 5B Figure 5C Figure 5D Figure 5E Figure 5F