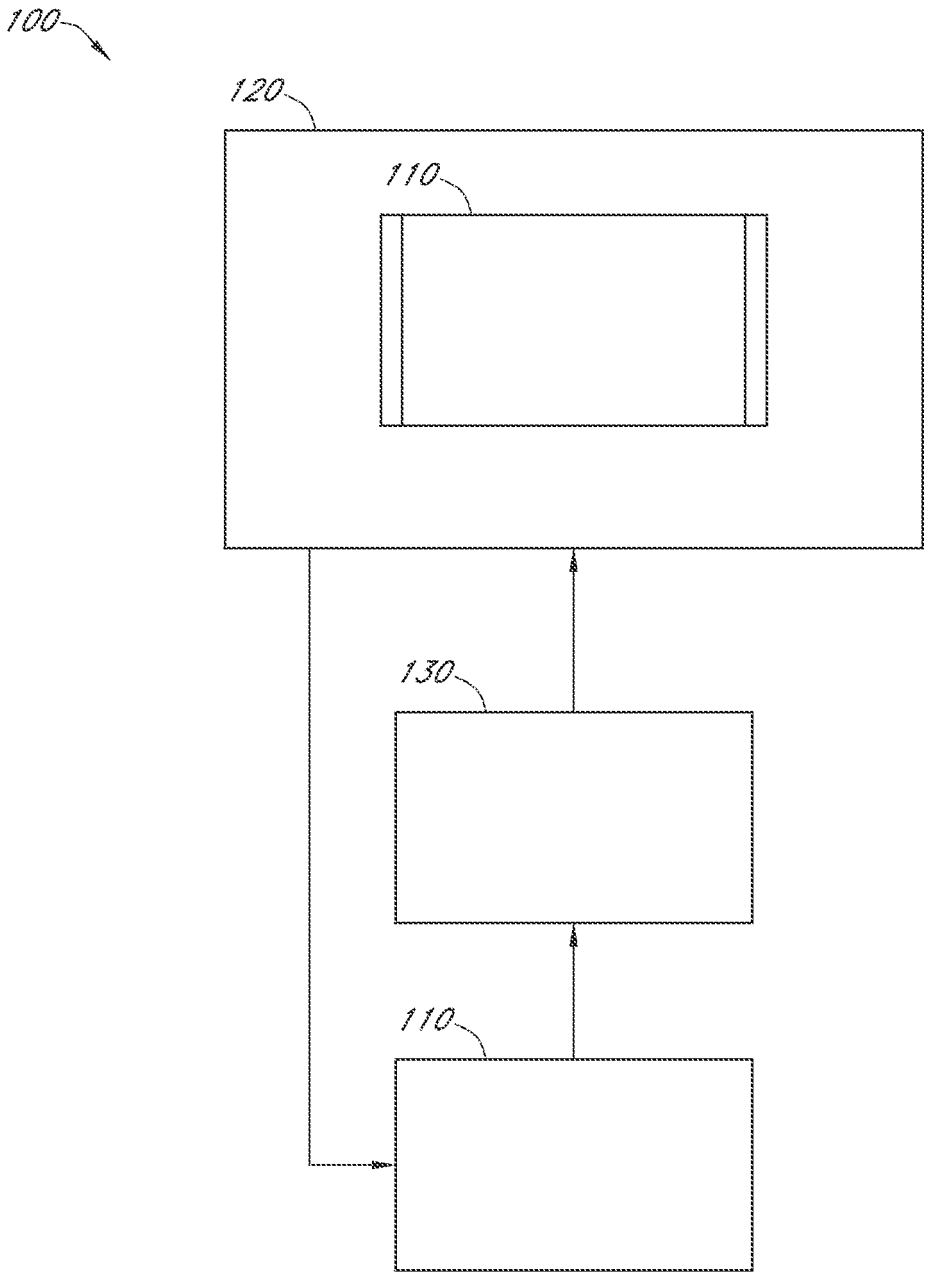

FIG. 1
(PRIOR ART)

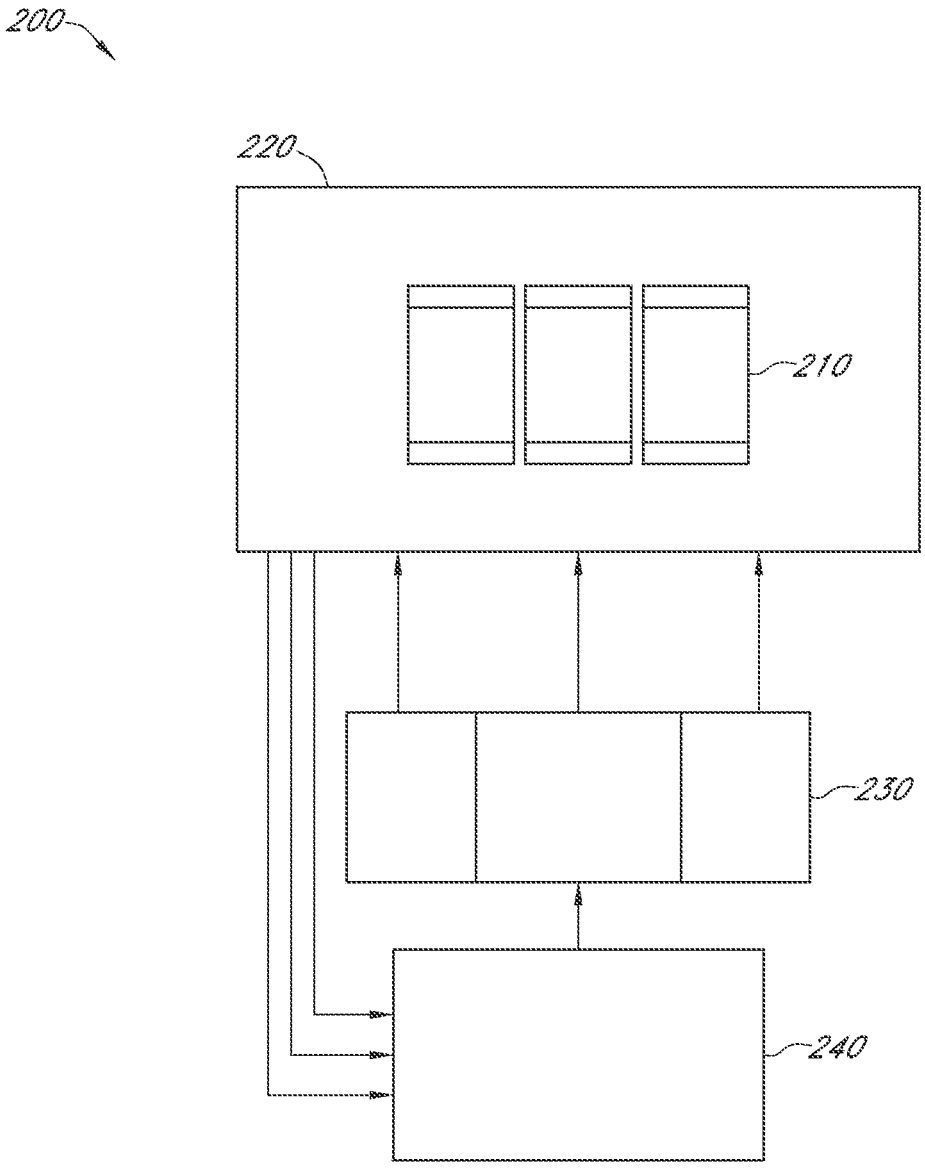

FIG. 2
(PRIOR ART)

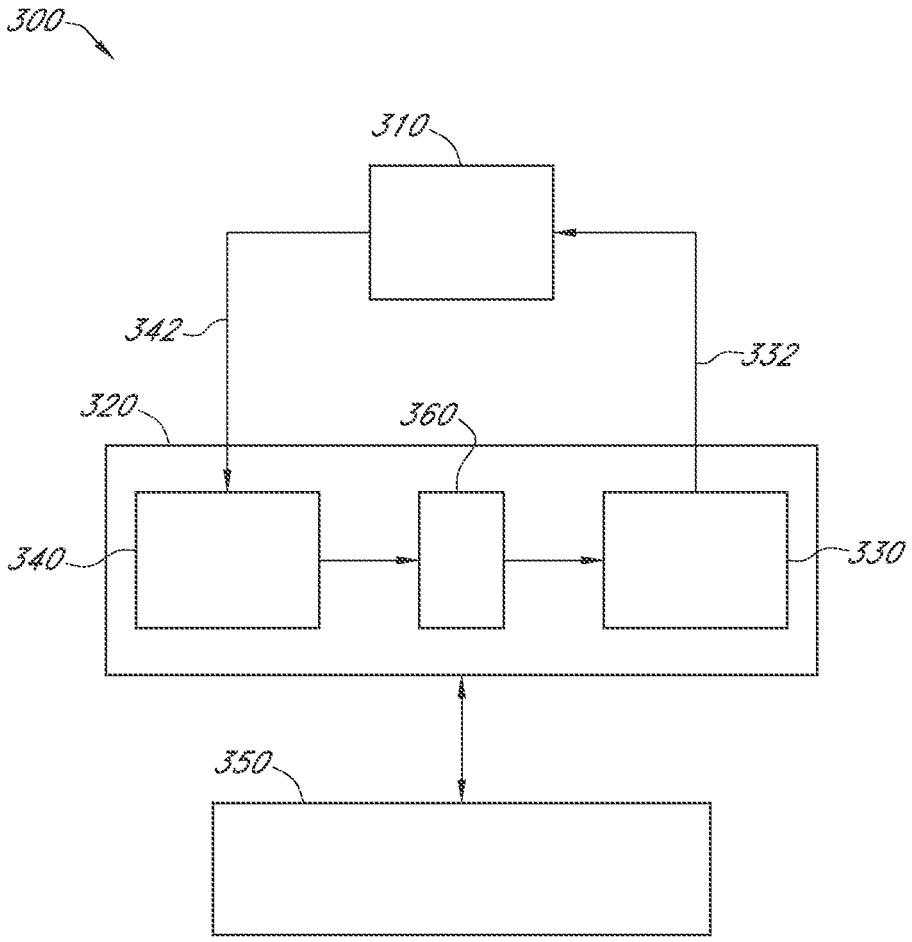

FIG. 3

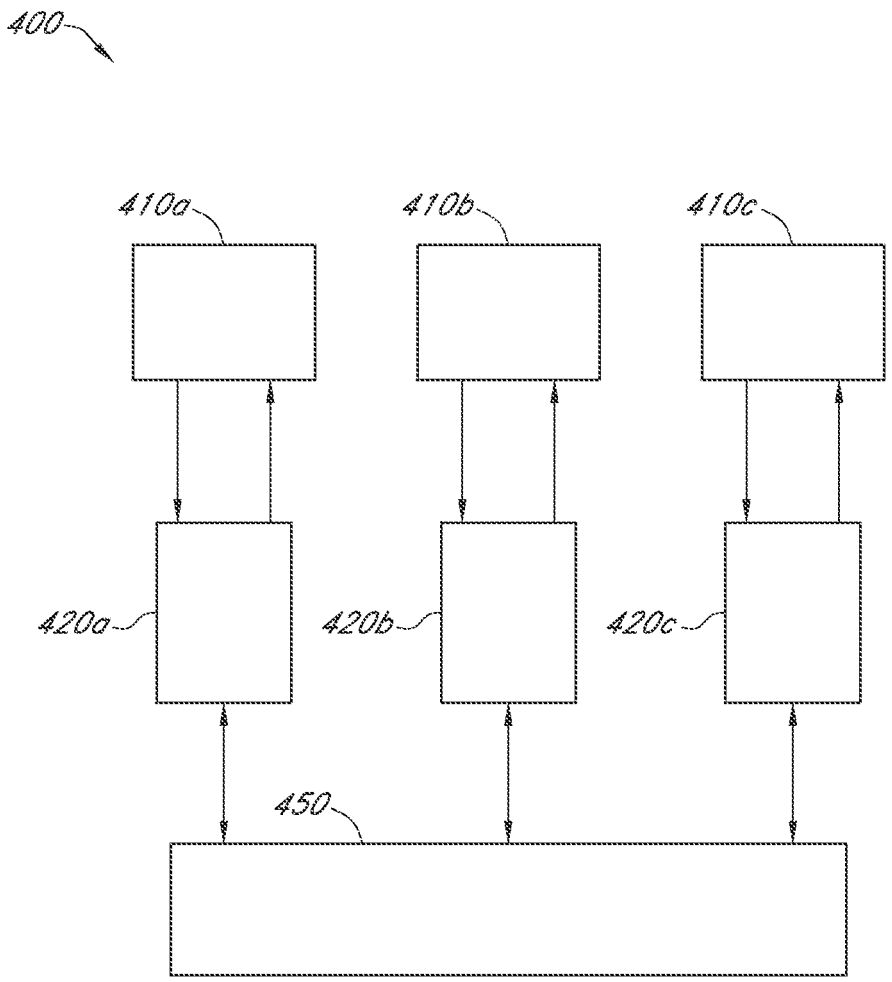

FIG. 4

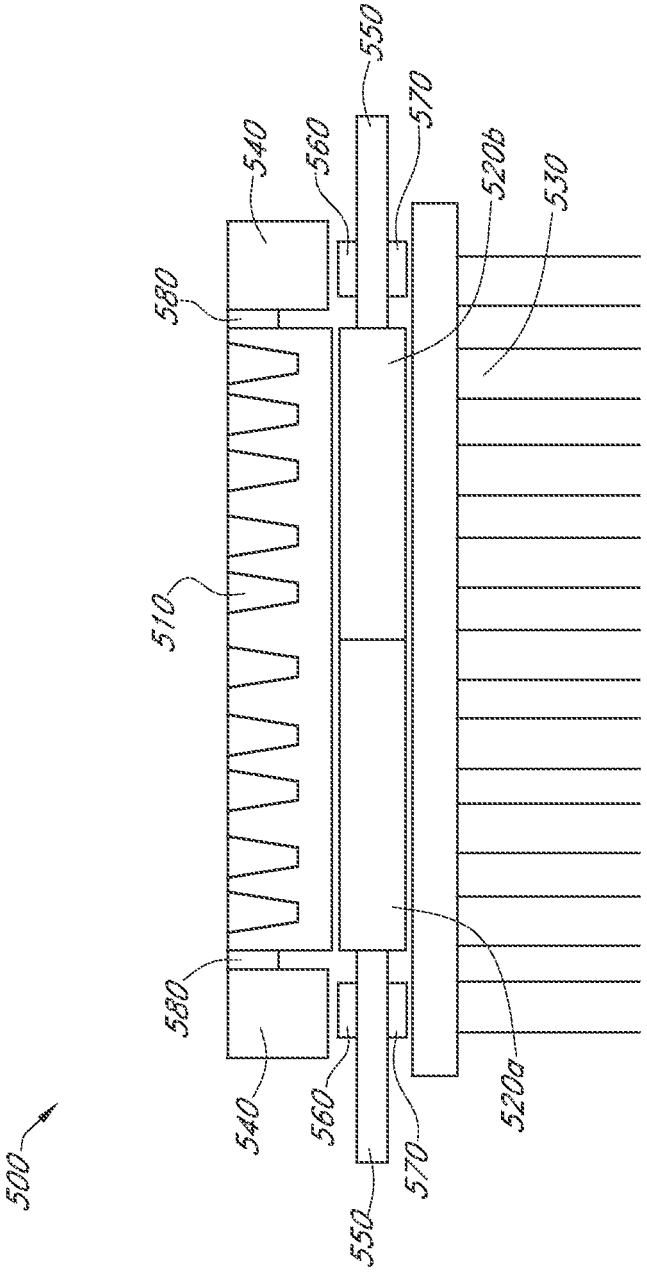

FIG. 5
(PRIOR ART)

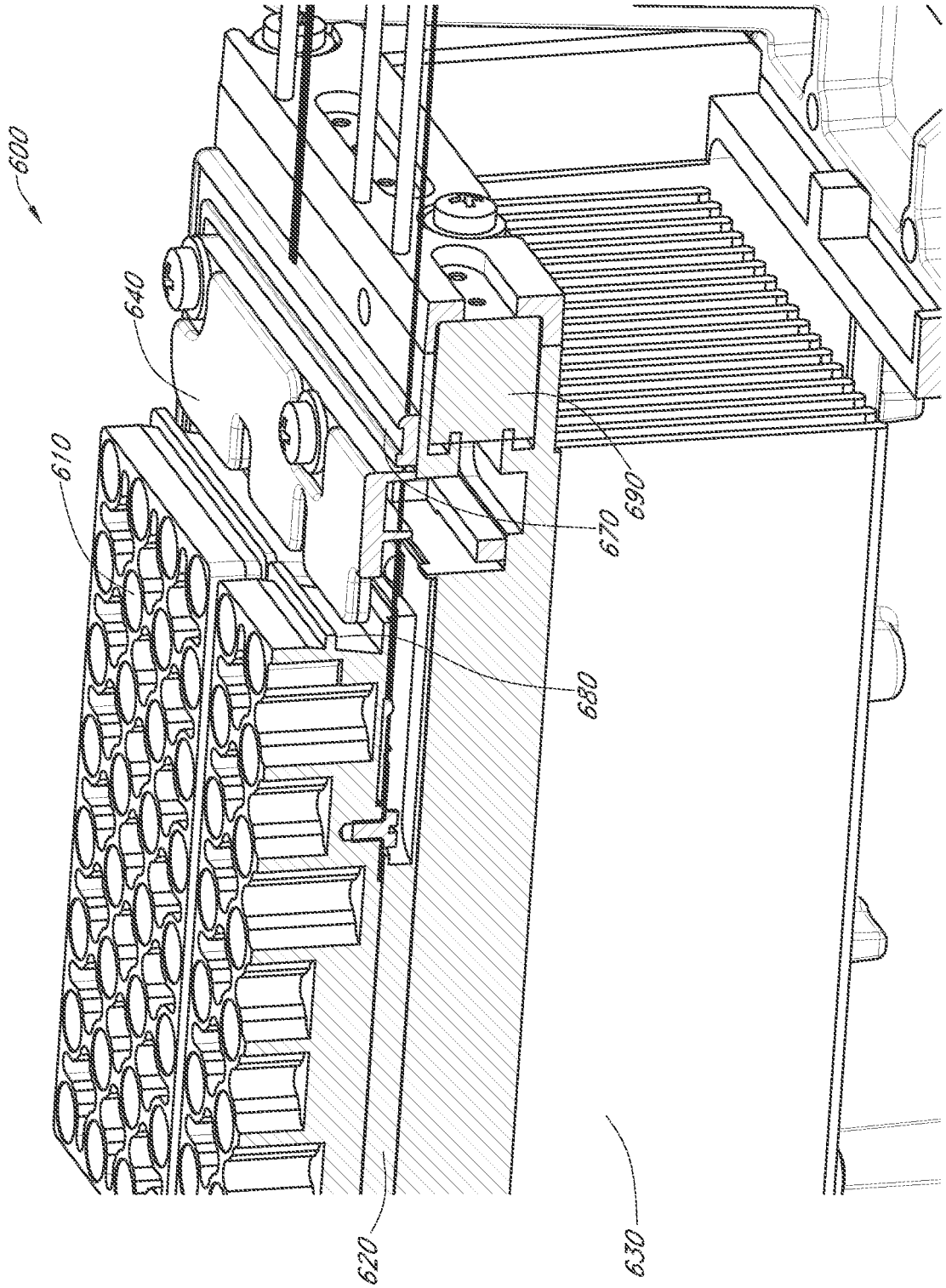

FIG. 6A

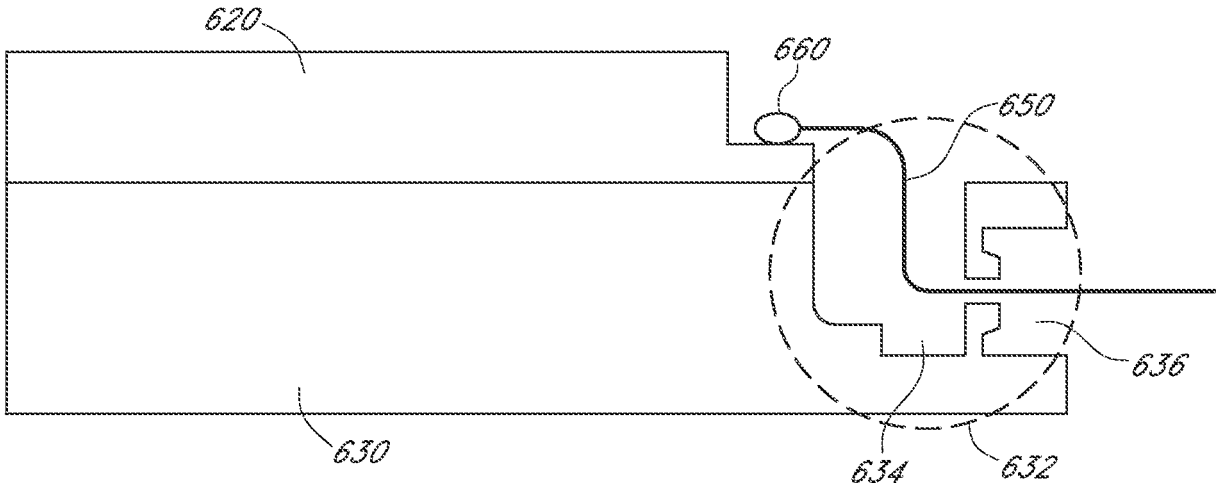

FIG. 6B

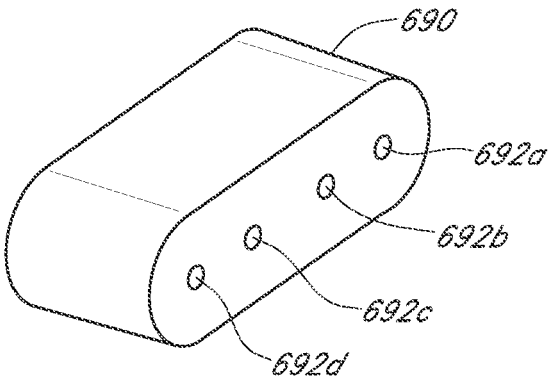

FIG. 6C

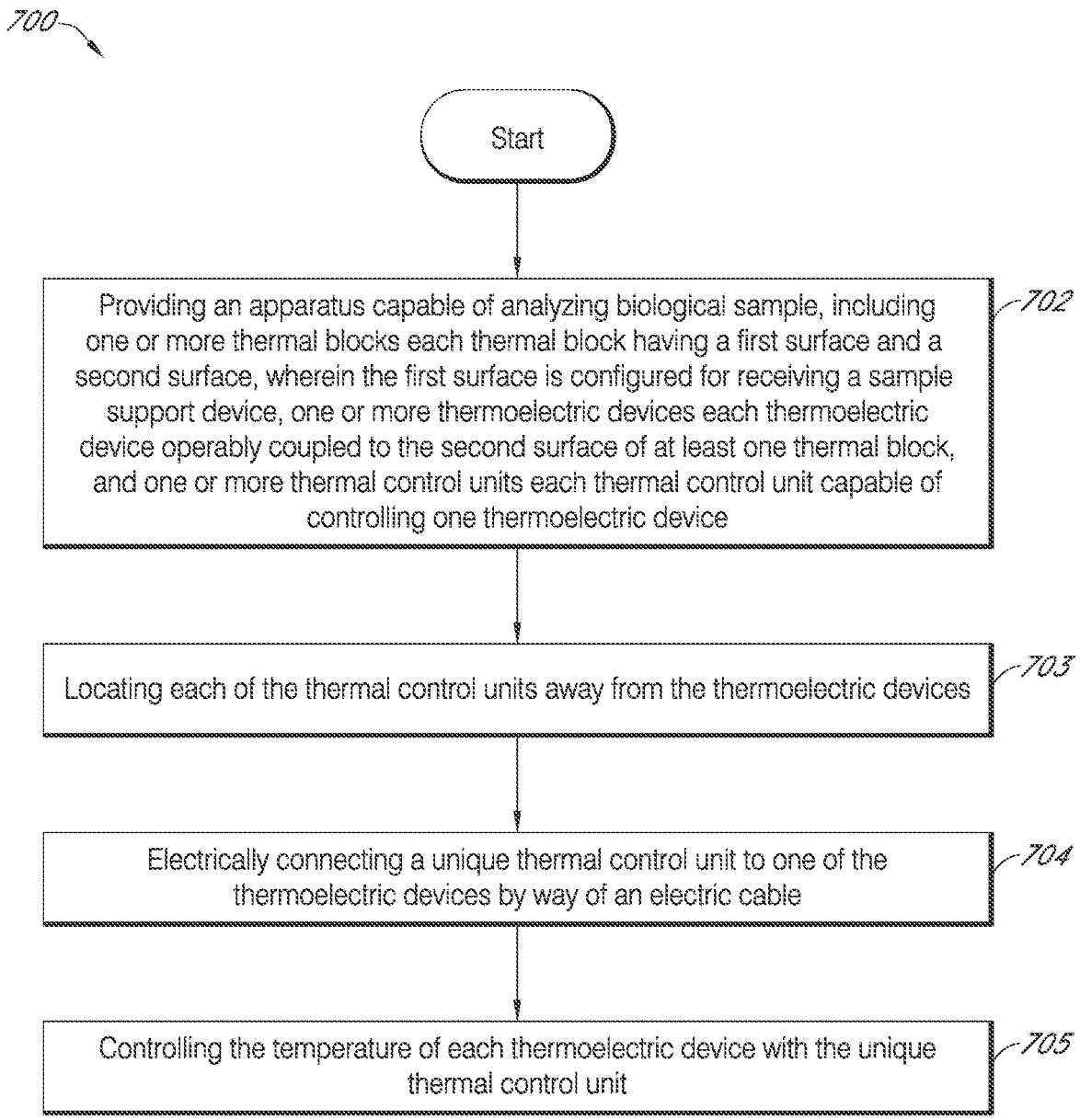
700
Start
Providing an apparatus capable of analyzing biological sample, including one or more thermal blocks each thermal block having a first surface and a second surface, wherein the first surface is configured for receiving a sample support device, one or more thermoelectric devices each thermoelectric device operably coupled to the second surface of at least one thermal block, and one or more thermal control units each thermal control unit capable of controlling one thermoelectric device
702
Locating each of the thermal control units away from the thermoelectric devices
703
Electrically connecting a unique thermal control unit to one of the thermoelectric devices by way of an electric cable
704
Controlling the temperature of each thermoelectric device with the unique thermal control unit
705

FIG. 7