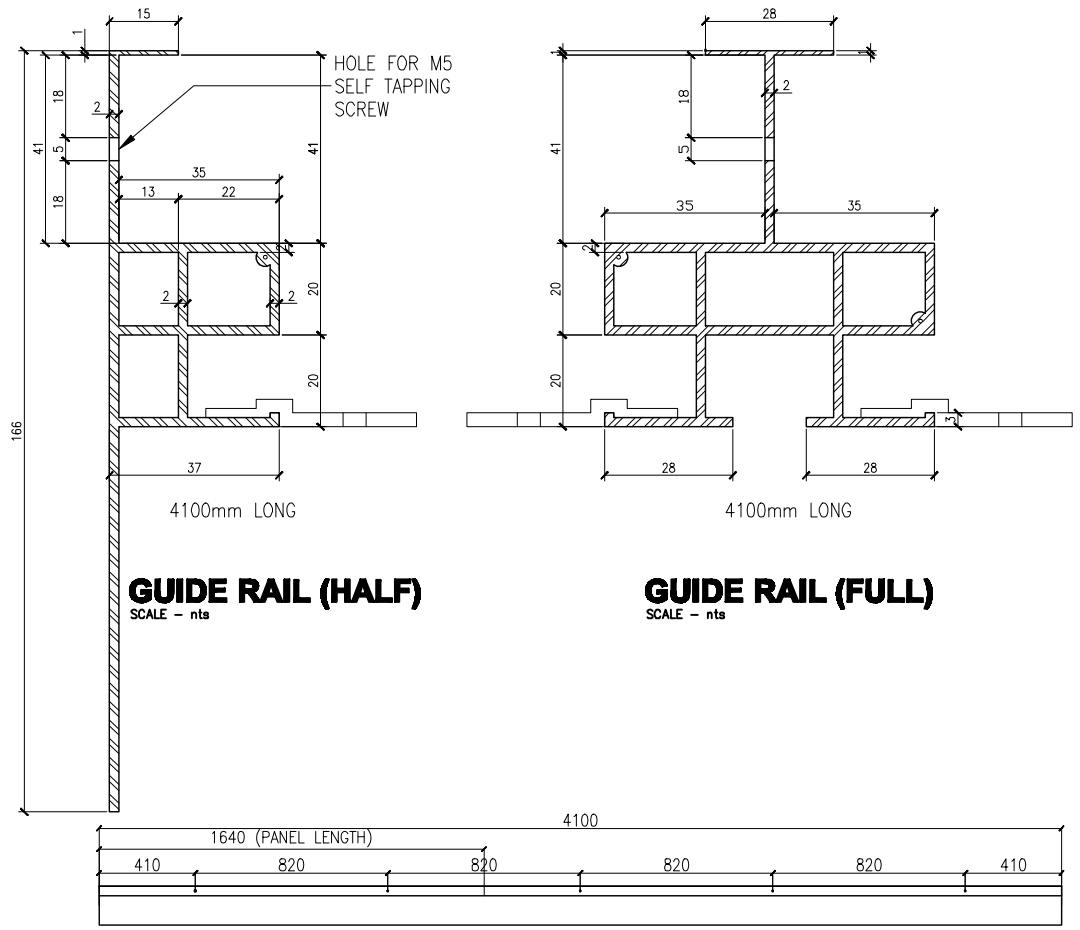

GUIDE RAIL (HALF)
SCALE – nts

GUIDE RAIL (FULL)
SCALE – nts

GUIDE RAIL FULL & HALF, HOLE FOR THE M5 SCREW SPACING

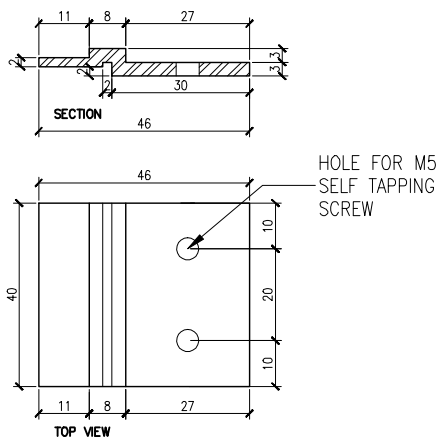

FIXED PLATE
SCALE – nts

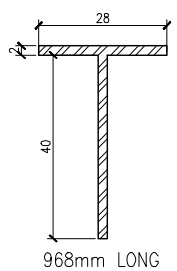

STATIONARY FLAT
SCALE – nts

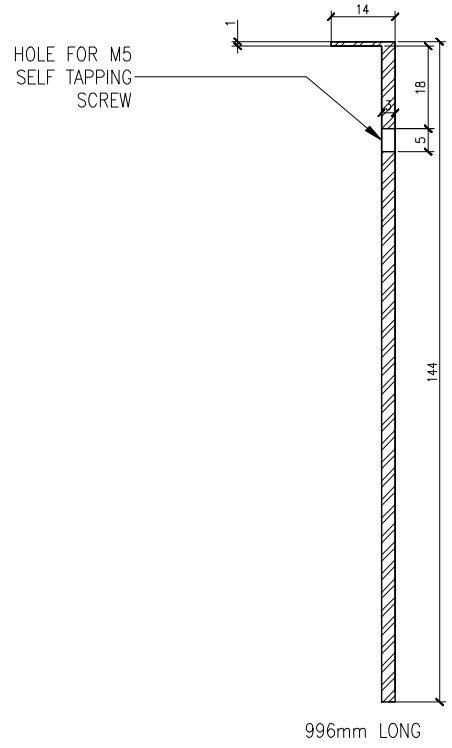

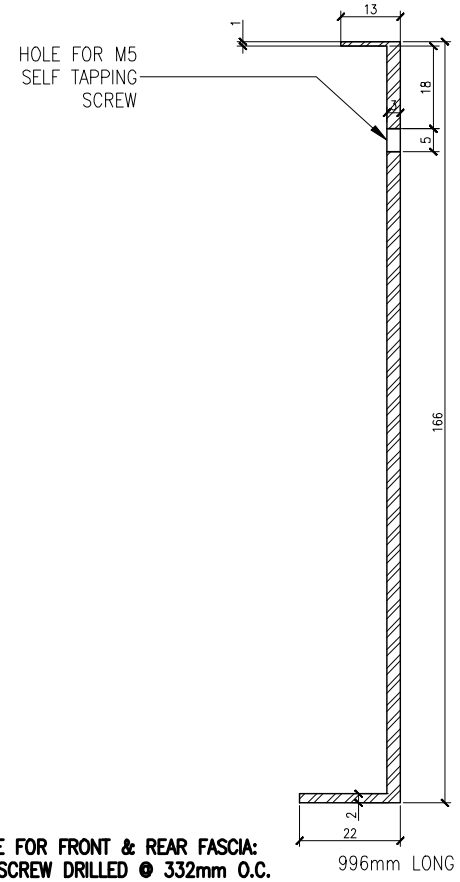

NOTE FOR FRONT & REAR FASCIA:
M5 SCREW DRILLED @ 332mm O.C.

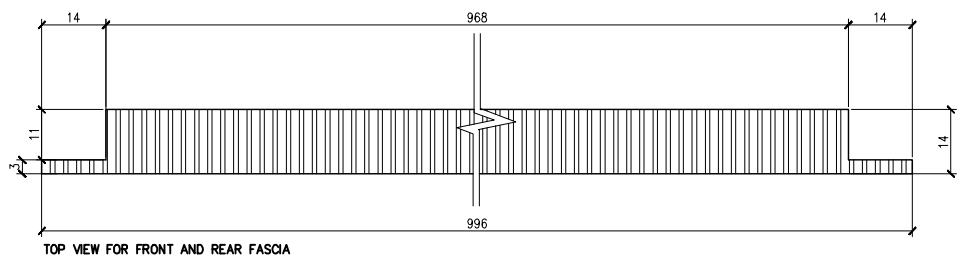

REAR FACE FASCIA
SCALE – nts

FRONT FACE FASCIA
SCALE – nts

SHOP DRAWING

CONTRACTOR:

JIE YANG ZHONGCHENG GROUP CO. LTD (SINGAPORE BRANCH)

ARCHITECT:

PROJECT TITLE:

PHOTOVOLTAIC SOLAR PANEL CONSTRUCTED AS MAIN ROOF OR SECONDARY ROOF FOR PUBLIC/PRIVATE HOUSING, COMMERCIAL BUILDING AND STATUTORY BUILDING

LOT NO. :

MUKIM NO. :

DRAWING TITLE:

PLANS, SECTION AND BLOW UP DETAILS

GENERAL NOTES:

1. THIS DRAWING SHALL NOT BE USED OTHER THAN FOR ITS INTENDED PURPOSE AS STATED HEREIN.
2. ALL DESIGN DETAILS SHOWN IN DRAWING ARE INDICATIVE OF ARCHITECTS' DESIGN INTEND ONLY. CONTRACTOR SHALL CHECK & VERIFY ALL DIMENSIONS ON SITE & SUBMIT WORKSHOP DRAWINGS, FIXING DETAILS & SAMPLES FOR 'SO' REP'S REVIEW AND APPROVAL BEFORE COMMENCEMENT OF ANY PROCUREMENT, FABRICATION AND INSTALLATION.

REVISION:	DATE

SCALE:

DRAWN BY : LCG

CHECKED BY :

DRAWING NO. : ZC - 07

SHEET NO: PAGE 7 OF 7

DATE OF ISSUE:

THE OWNERSHIP OF THE COPYRIGHT IN THIS DRAWING IS RETAINED BY ARCHITECTS VISTA PTE LTD WHOSE CONSENT MUST BE SOUGHT BEFORE ANY USE OR REPRODUCTION OF THE DRAWING OR ANY PART THEREOF CAN BE MADE.