(12) INTERNATIONAL APPLICATION PUBLISHED UNDER THE PATENT COOPERATION TREATY (PCT)

(19) World Intellectual Property Organization
International Bureau

(43) International Publication Date
3 May 2001 (03.05.2001)

PCT

(10) International Publication Number
WO 01/31801 A1

(51) International Patent Classification[7]: H04B 1/38, H04L 5/16

(21) International Application Number: PCT/US00/29726

(22) International Filing Date: 27 October 2000 (27.10.2000)

(25) Filing Language: English

(26) Publication Language: English

(30) Priority Data:
60/161,940 28 October 1999 (28.10.1999) US

(71) Applicant: POWERSMART, INC. [US/US]; 200 Reservoir Street, Needham, MA 02494 (US).

(72) Inventors: FRIEL, Daniel, D.; 4 Surrey Road, Woburn, MA 01801 (US). ZANDERS, Gary, V.; 700 Elk Ridge, Fairview, TX 75069 (US).

(74) Agents: KUSMER, Toby, H. et al.; McDermott, Will & Emery, 28 State Street, Boston, MA 02109 (US).

(81) Designated States *(national)*: AE, AG, AL, AM, AT, AU, AZ, BA, BB, BG, BR, BY, BZ, CA, CH, CN, CR, CU, CZ, DE, DK, DM, DZ, EE, ES, FI, GB, GD, GE, GH, GM, HR, HU, ID, IL, IN, IS, JP, KE, KG, KP, KR, KZ, LC, LK, LR, LS, LT, LU, LV, MA, MD, MG, MK, MN, MW, MX, MZ, NO, NZ, PL, PT, RO, RU, SD, SE, SG, SI, SK, SL, TJ, TM, TR, TT, TZ, UA, UG, UZ, VN, YU, ZA, ZW.

(84) Designated States *(regional)*: ARIPO patent (GH, GM, KE, LS, MW, MZ, SD, SL, SZ, TZ, UG, ZW), Eurasian patent (AM, AZ, BY, KG, KZ, MD, RU, TJ, TM), European patent (AT, BE, CH, CY, DE, DK, ES, FI, FR, GB, GR, IE, IT, LU, MC, NL, PT, SE), OAPI patent (BF, BJ, CF, CG, CI, CM, GA, GN, GW, ML, MR, NE, SN, TD, TG).

Published:
— *With international search report.*

For two-letter codes and other abbreviations, refer to the "Guidance Notes on Codes and Abbreviations" appearing at the beginning of each regular issue of the PCT Gazette.

(54) Title: ONE WAY SINGLE-WIRE COMMUNICATION INTERFACE

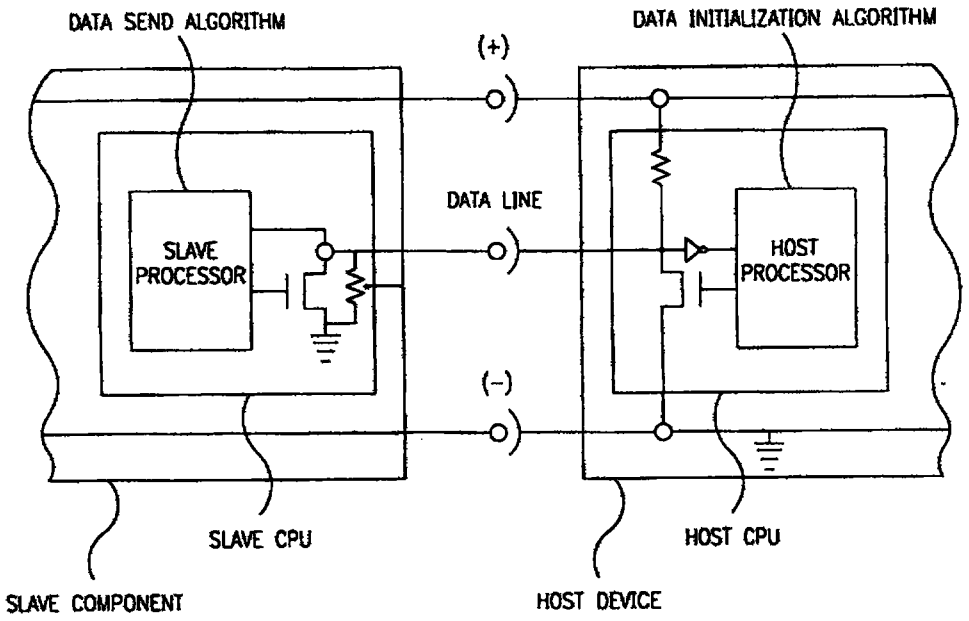

(57) Abstract: A data communication interface for transferring at least one data bit to a host processor. The interface includes a one-wire data line, and a slave processor connected to the data line and including a pull-down circuit for varying voltage on the data line. The slave processor is passive and incapable of sampling data from the data line. The slave processor is programmed to vary voltage on the data line when the data line is energined, to signal of at least one data bit.

WO 01/31801 A1