PCT WORLD INTELLECTUAL PROPERTY ORGANIZATION
International Bureau

INTERNATIONAL APPLICATION PUBLISHED UNDER THE PATENT COOPERATION TREATY (PCT)

(51) International Patent Classification 5 : A61K 31/00 — A1

(11) International Publication Number: WO 92/06681

(43) International Publication Date: 30 April 1992 (30.04.92)

(21) International Application Number: PCT/US91/07301

(22) International Filing Date: 8 October 1991 (08.10.91)

(30) Priority data:
595,387 10 October 1990 (10.10.90) US

(71)(72) Applicants and Inventors: KLATZ, Ronald, M. [US/US]; 1510 Montana Street, Chicago, IL 60614 (US). GOLDMAN, Robert, M. [US/US]; 2434 N. Greenview, Chicago, IL 60614 (US).

(74) Agents: DVORAK, George, F. et al.; 53 West Jackson Boulevard, Chicago, IL 60604 (US).

(81) Designated States: AT, AT (European patent), AU, BB, BE (European patent), BF (OAPI patent), BG, BJ (OAPI patent), BR, CA, CF (OAPI patent), CG (OAPI patent), CH, CH (European patent), CI (OAPI patent), CM (OAPI patent), CS, DE, DE (European patent), DK, DK (European patent), ES, ES (European patent), FI, FR (European patent), GA (OAPI patent), GB, GB (European patent), GN (OAPI patent), GR (European patent), HU, IT (European patent), JP, KP, KR, LK, LU, LU (European patent), MC, MG, ML (OAPI patent), MN, MR (OAPI patent), MW, NL, NL (European patent), NO, PL, RO, SD, SE, SE (European patent), SN (OAPI patent), SU+,TD (OAPI patent), TG (OAPI patent).

Published
With international search report.
Before the expiration of the time limit for amending the claims and to be republished in the event of the receipt of amendments.

(54) Title: BRAIN RESUSCITATION DEVICE AND METHOD

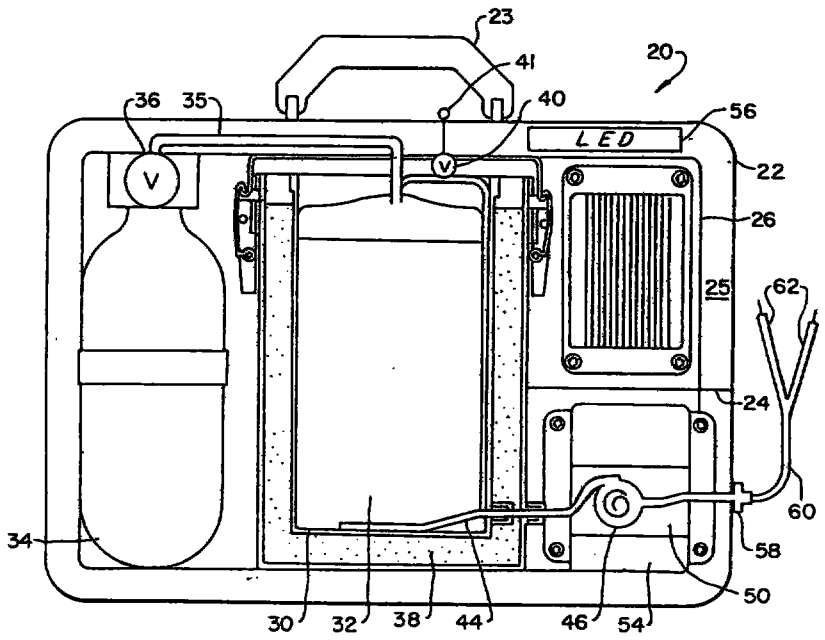

(57) Abstract

This invention discloses a method for resuscitating the brain as a result of ischemic and anoxic injuries whereby the patient survives neurologically intact. The method includes the steps of catheterizing the patient's circulatory system and introducing a temperature controlled solution to cool the brain to a coma and a state of hypothermic shock, further driving the brain into a sub-metabolic coma, oxygenating the brain and inhibiting free radicle damage, and continuing additional efforts at life support. The temperature controlled brain resuscitation solution includes barbiturates, perfluorocarbons, antioxidants, brain and neurologic tissue damage reversing and protecting agents, carrier vehicles, diluents, nutrients, and anti-coagulating agents. A device which performs this method is also disclosed. This device includes a fluid reservoir (30), an oxygen tank (34), a heat exchanger (38) and removable catheter lines (60).

+ See back of page

THIS SHEET HAS BEEN REPLACED