(12) INTERNATIONAL APPLICATION PUBLISHED UNDER THE PATENT COOPERATION TREATY (PCT)

(19) World Intellectual Property Organization
International Bureau

(43) International Publication Date
13 September 2007 (13.09.2007)

PCT

(10) International Publication Number
WO 2007/102908 A3

(51) International Patent Classification:
H04Q 7/22 (2006.01) *H04L 12/28* (2006.01)

(21) International Application Number:
PCT/US2006/061959

(22) International Filing Date:
12 December 2006 (12.12.2006)

(25) Filing Language: English

(26) Publication Language: English

(30) Priority Data:
60/750,234 13 December 2005 (13.12.2005) US
11/550,955 19 October 2006 (19.10.2006) US

(71) Applicant *(for all designated States except US)*: **QUALCOMM Incorporated** [US/US]; 5775 Morehouse Drive, San Diego, California 92121 (US).

(72) Inventors; and

(75) Inventors/Applicants *(for US only)*: **REZAIIFAR, Ramin** [US/US]; 10896 Caminito Arcada, San Diego, California 92131 (US). **MOHANTY, Bibhu P.** [US/US]; 10716 Stallions Lane, San Diego, California 92130 (US).

(74) Agents: **WADSWORTH, Philip R.** et al.; 5775 Morehouse Drive, San Diego, California 92121 (US).

(81) Designated States *(unless otherwise indicated, for every kind of national protection available)*: AE, AG, AL, AM, AT, AU, AZ, BA, BB, BG, BR, BW, BY, BZ, CA, CH, CN, CO, CR, CU, CZ, DE, DK, DM, DZ, EC, EE, EG, ES, FI, GB, GD, GE, GH, GM, GT, HN, HR, HU, ID, IL, IN, IS, JP, KE, KG, KM, KN, KP, KR, KZ, LA, LC, LK, LR, LS, LT, LU, LV, LY, MA, MD, MG, MK, MN, MW, MX, MY, MZ, NA, NG, NI, NO, NZ, OM, PG, PH, PL, PT, RO, RS, RU, SC, SD, SE, SG, SK, SL, SM, SV, SY, TJ, TM, TN, TR, TT, TZ, UA, UG, US, UZ, VC, VN, ZA, ZM, ZW.

(84) Designated States *(unless otherwise indicated, for every kind of regional protection available)*: ARIPO (BW, GH, GM, KE, LS, MW, MZ, NA, SD, SL, SZ, TZ, UG, ZM, ZW), Eurasian (AM, AZ, BY, KG, KZ, MD, RU, TJ, TM), European (AT, BE, BG, CH, CY, CZ, DE, DK, EE, ES, FI, FR, GB, GR, HU, IE, IS, IT, LT, LU, LV, MC, NL, PL, PT, RO, SE, SI, SK, TR), OAPI (BF, BJ, CF, CG, CI, CM, GA, GN, GQ, GW, ML, MR, NE, SN, TD, TG).

Declarations under Rule 4.17:

— *as to applicant's entitlement to apply for and be granted a patent (Rule 4.17(ii))*

— *as to the applicant's entitlement to claim the priority of the earlier application (Rule 4.17(iii))*

Published:

— *with international search report*

— *before the expiration of the time limit for amending the claims and to be republished in the event of receipt of amendments*

(88) Date of publication of the international search report:
13 March 2008

(54) Title: SYSTEM AND METHOD FOR DELIVERING SHORT MESSAGES ON DO AND 1X NETWORKS

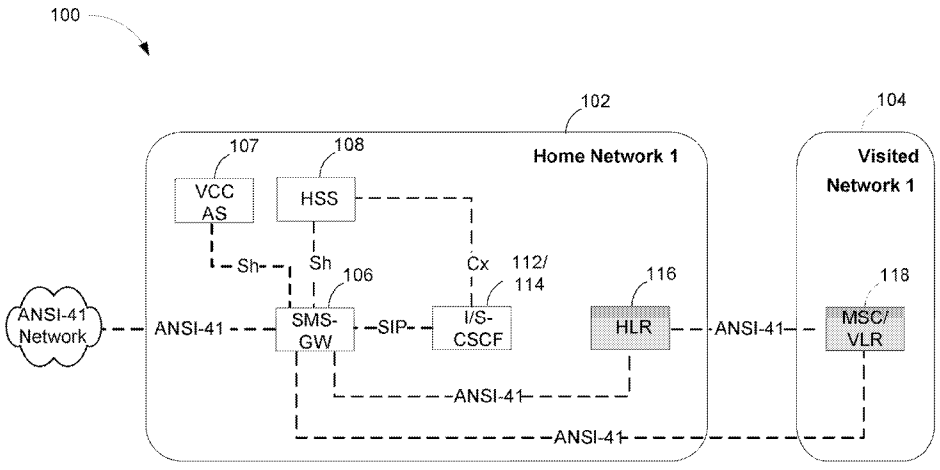

(57) Abstract: A method for delivering SMS to ATs in a first communication network providing DO and 1x interfaces and for offloading the delivery of the SMS from a second communication network including an MSC, comprising monitoring a DO control channel for pages by an AT and delivering the SMS in SIP to the AT over the DO interface. The method may further comprise tuning the AT to the DO interface and determining whether the AT is SIP registered for using the DO interface. An application server determines whether the AT is SIP registered for using the DO interface. When the DO interface is not available, the SMS may be delivered over the 1x interface and the method further comprises the AT sending a special SMS to an SMS gateway, which causes the application server to remember that the AT is now monitoring the first communication network including a circuit-switched network.

WO 2007/102908 A3