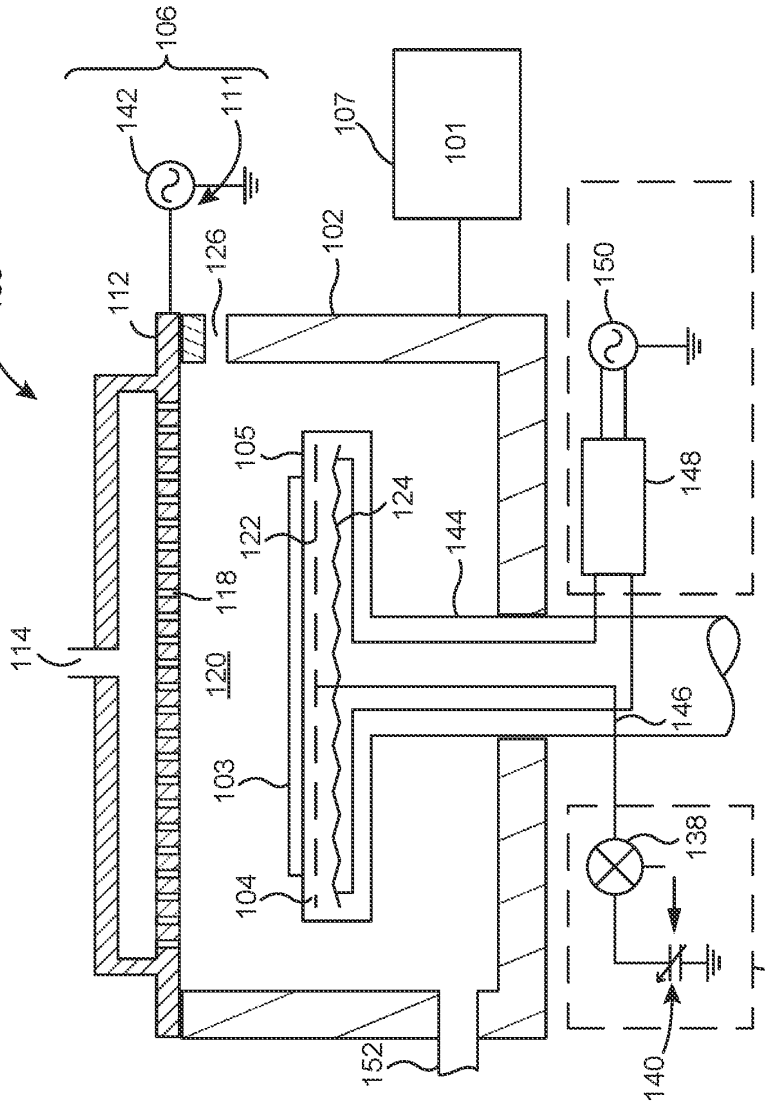
100
106
142
111
107
101
102
126
112
150
105
124
122
144
148
118
114
120
146
103
138
104
136
152
140

FIG. 1

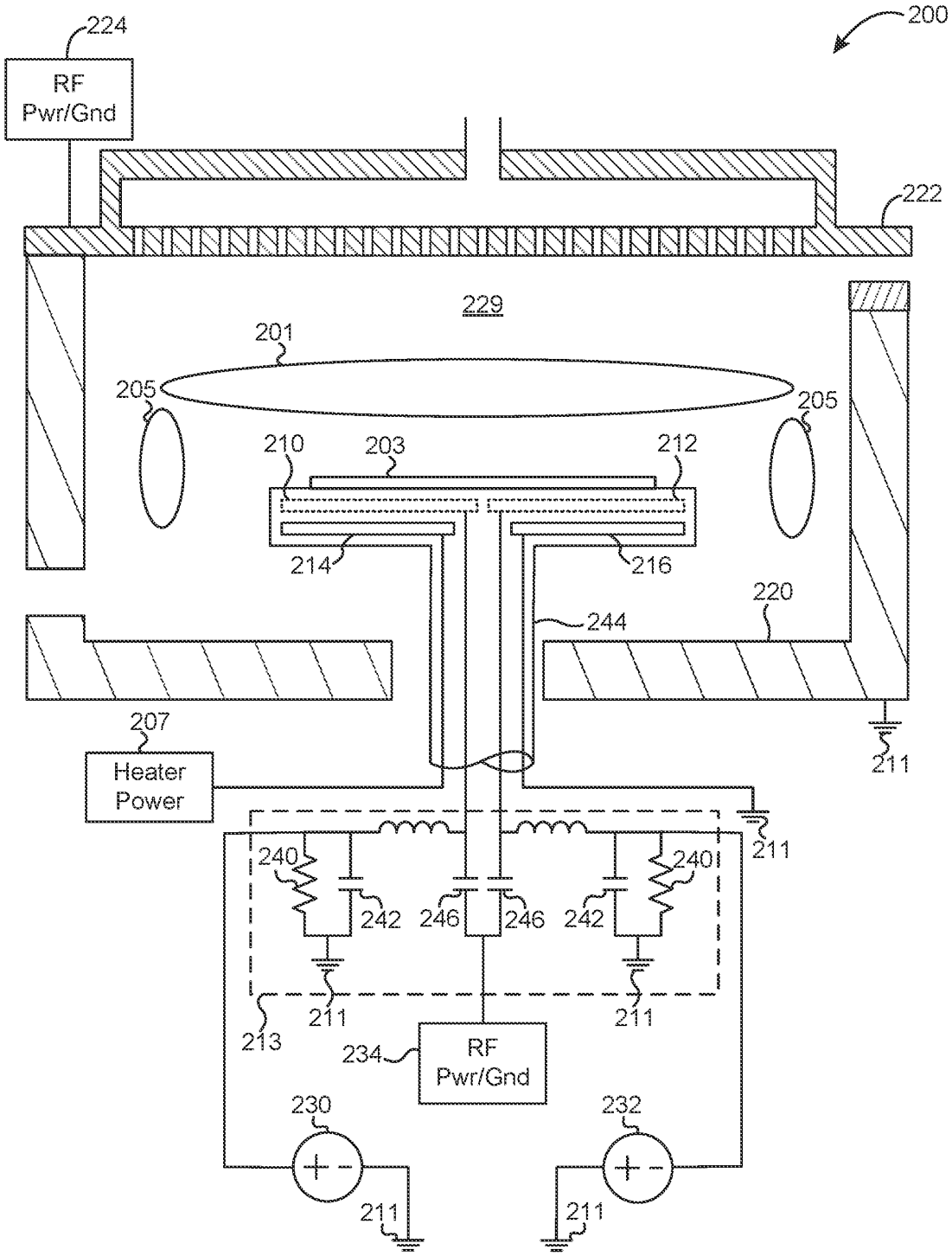
224
RF
Pwr/Gnd
200
222
229
201
205
205
210
203
212
214
216
220
244
207
Heater
Power
211
240
242
246
246
242
240
211
211
213
234
RF
Pwr/Gnd
230
232
211
211

FIG. 2

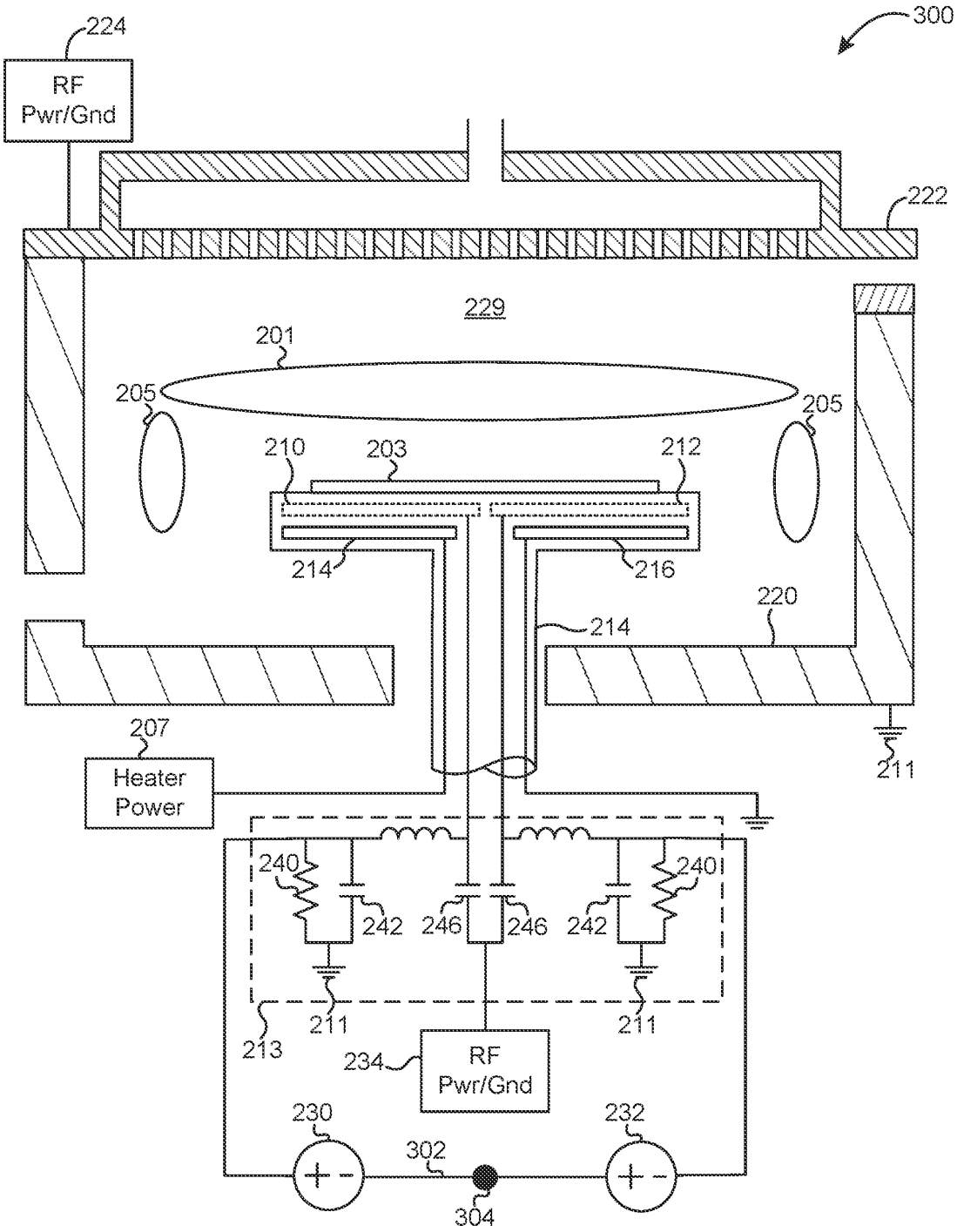
300
224
RF
Pwr/Gnd
222
229
201
205
205
210
203
212
214
216
220
214
207
Heater
Power
211
240
240
242
246
246
242
211
211
213
234
RF
Pwr/Gnd
230
232
302
304

FIG. 3

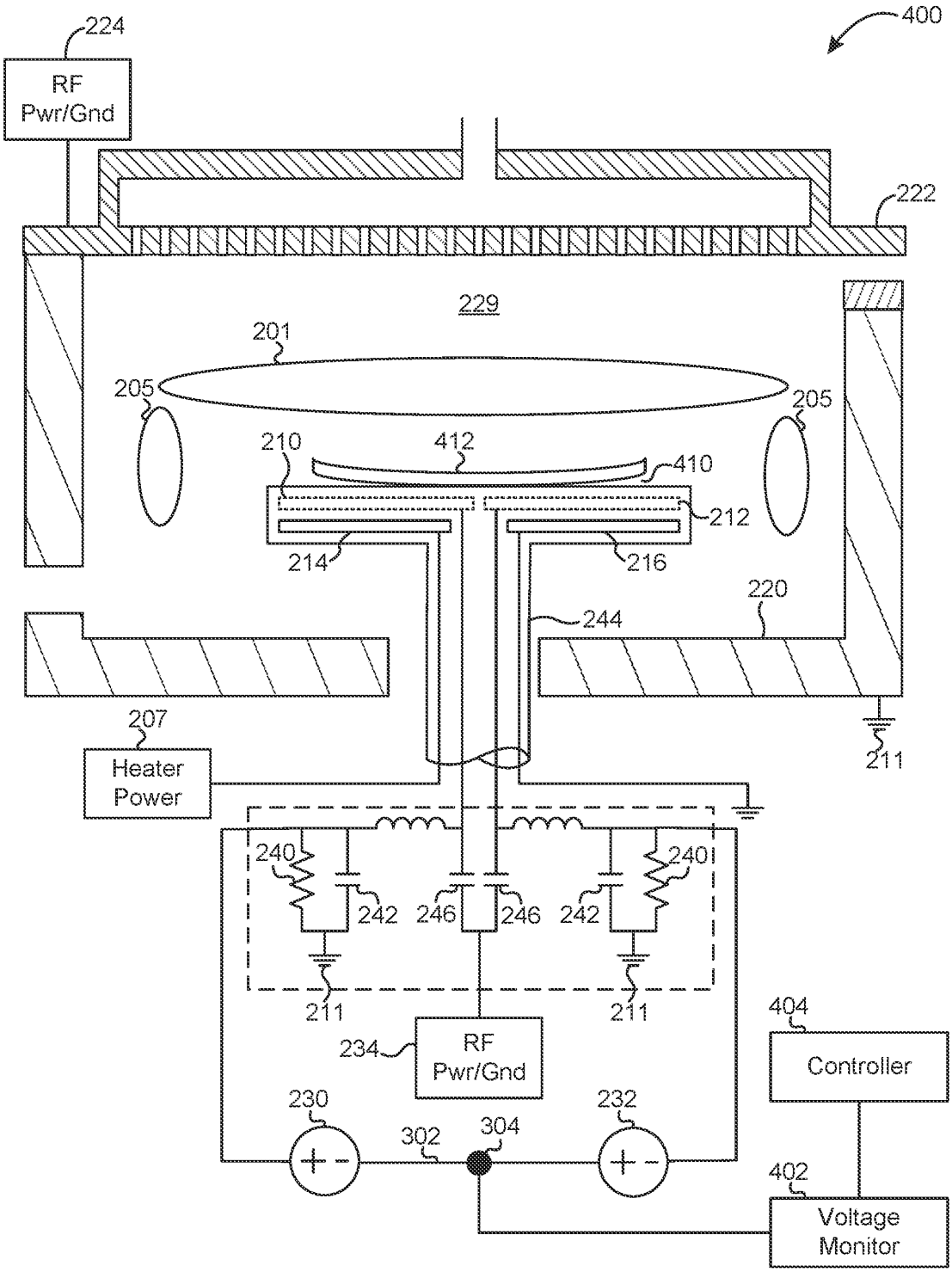
400
224
RF
Pwr/Gnd
222
229
201
205
205
210
412
410
212
214
216
220
244
207
Heater
Power
211
240
240
242
246
246
242
211
211
234
RF
Pwr/Gnd
404
Controller
230
232
302
304
402
Voltage
Monitor

FIG. 4

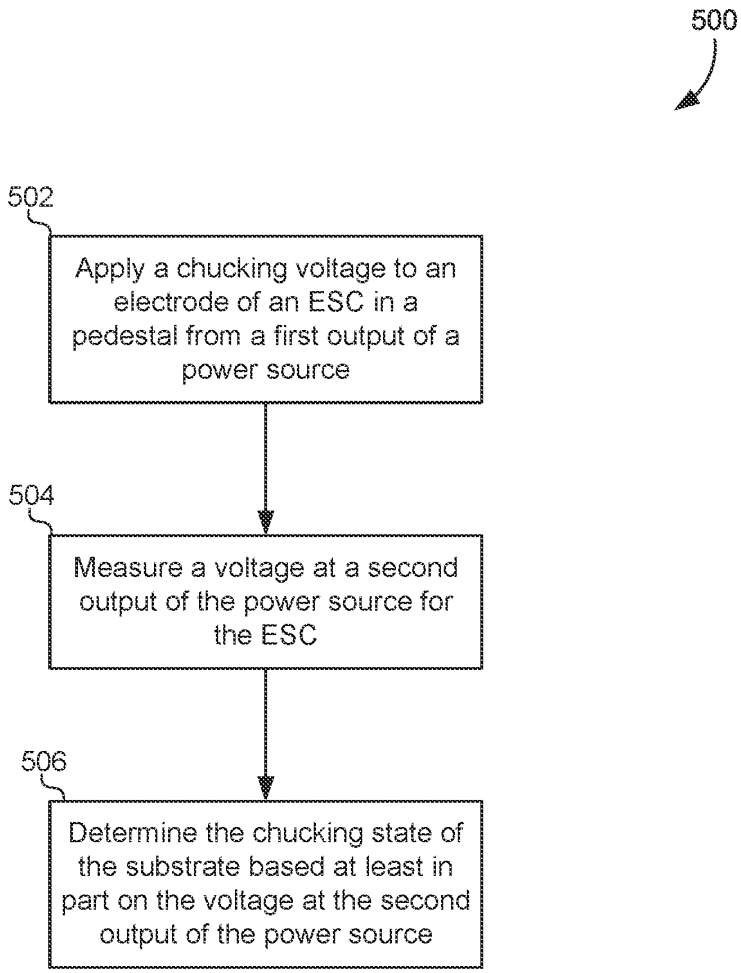
500
502
Apply a chucking voltage to an electrode of an ESC in a pedestal from a first output of a power source
504
Measure a voltage at a second output of the power source for the ESC
506
Determine the chucking state of the substrate based at least in part on the voltage at the second output of the power source

FIG. 5

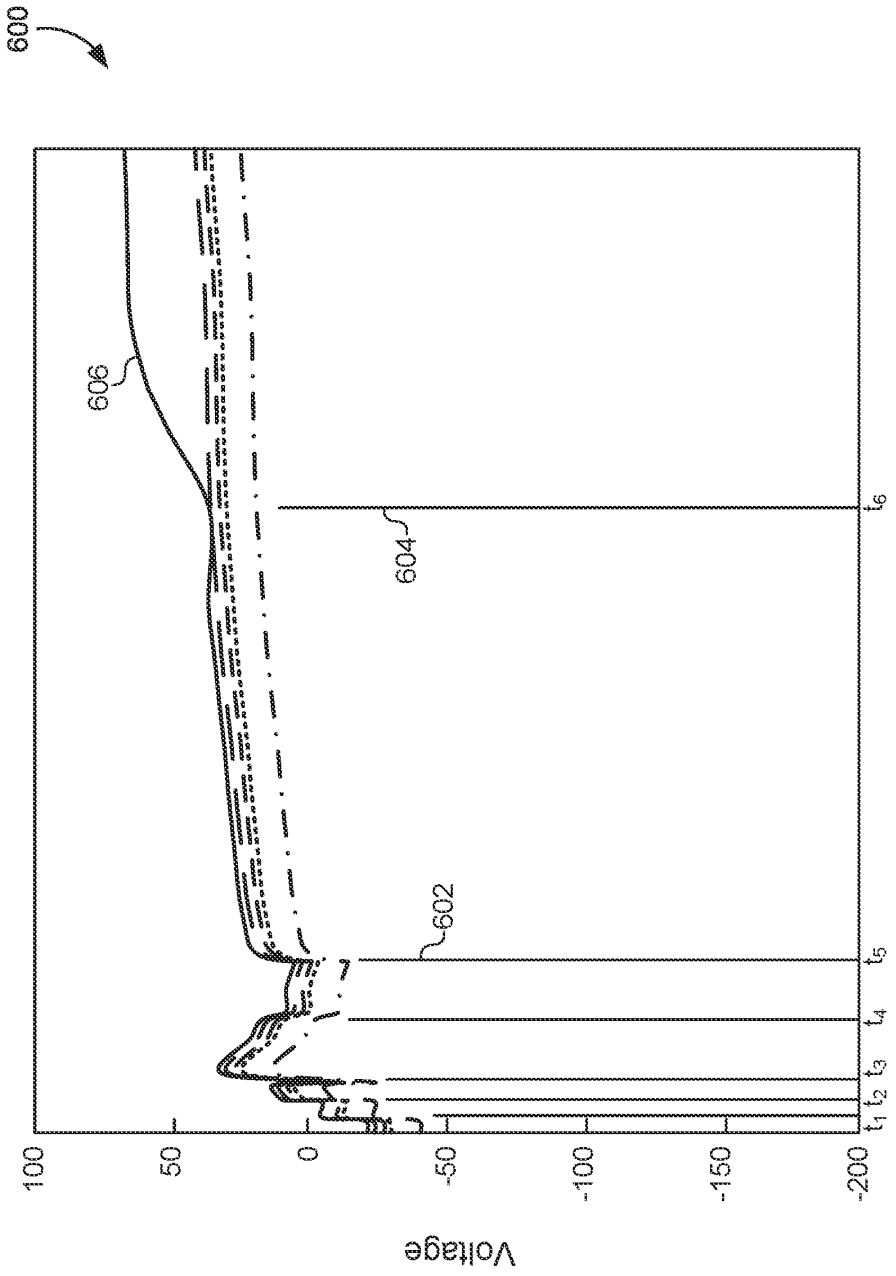
600
606
604
602
100
50
0
-50
-100
-150
-200
Voltage
t_1 t_2 t_3 t_4 t_5 t_6
Time

FIG. 6

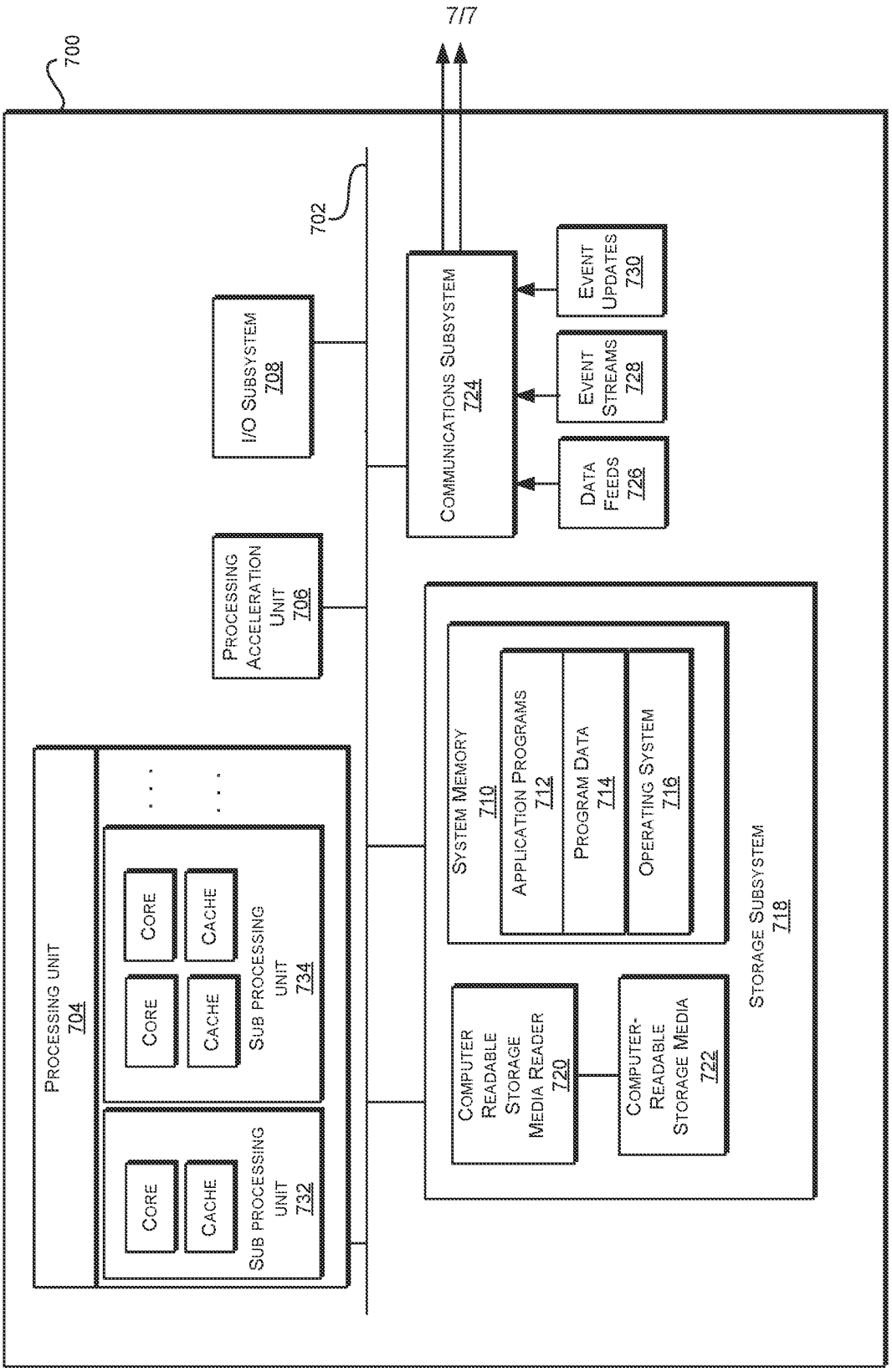
700
777
702
I/O SUBSYSTEM 708
COMMUNICATIONS SUBSYSTEM 724
EVENT UPDATES 730
EVENT STREAMS 728
DATA FEEDS 726
PROCESSING ACCELERATION UNIT 706
PROCESSING UNIT 704
CORE
CACHE
SUB PROCESSING UNIT 732
SUB PROCESSING UNIT 734
SYSTEM MEMORY 710
APPLICATION PROGRAMS 712
PROGRAM DATA 714
OPERATING SYSTEM 716
COMPUTER READABLE STORAGE MEDIA READER 720
COMPUTER-READABLE STORAGE MEDIA 722
STORAGE SUBSYSTEM 718

FIG. 7