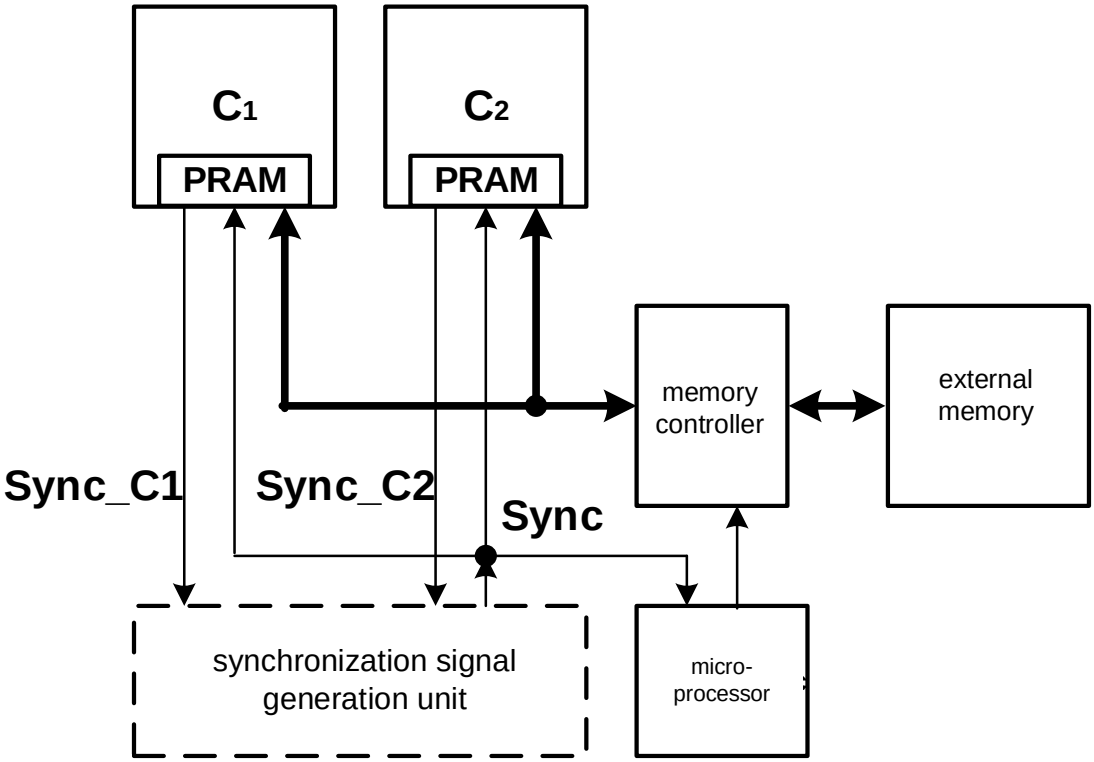
C1
C2
PRAM
PRAM
memory controller
external memory
Sync_C1
Sync_C2
Sync
synchronization signal generation unit
micro-processor

FIG. 4

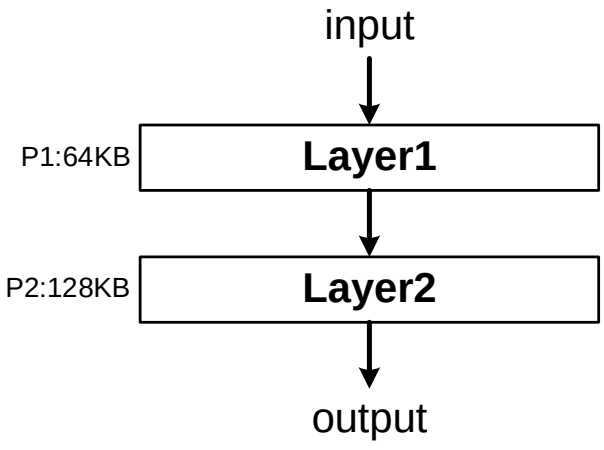
input
P1:64KB
Layer1
P2:128KB
Layer2
output

FIG. 5