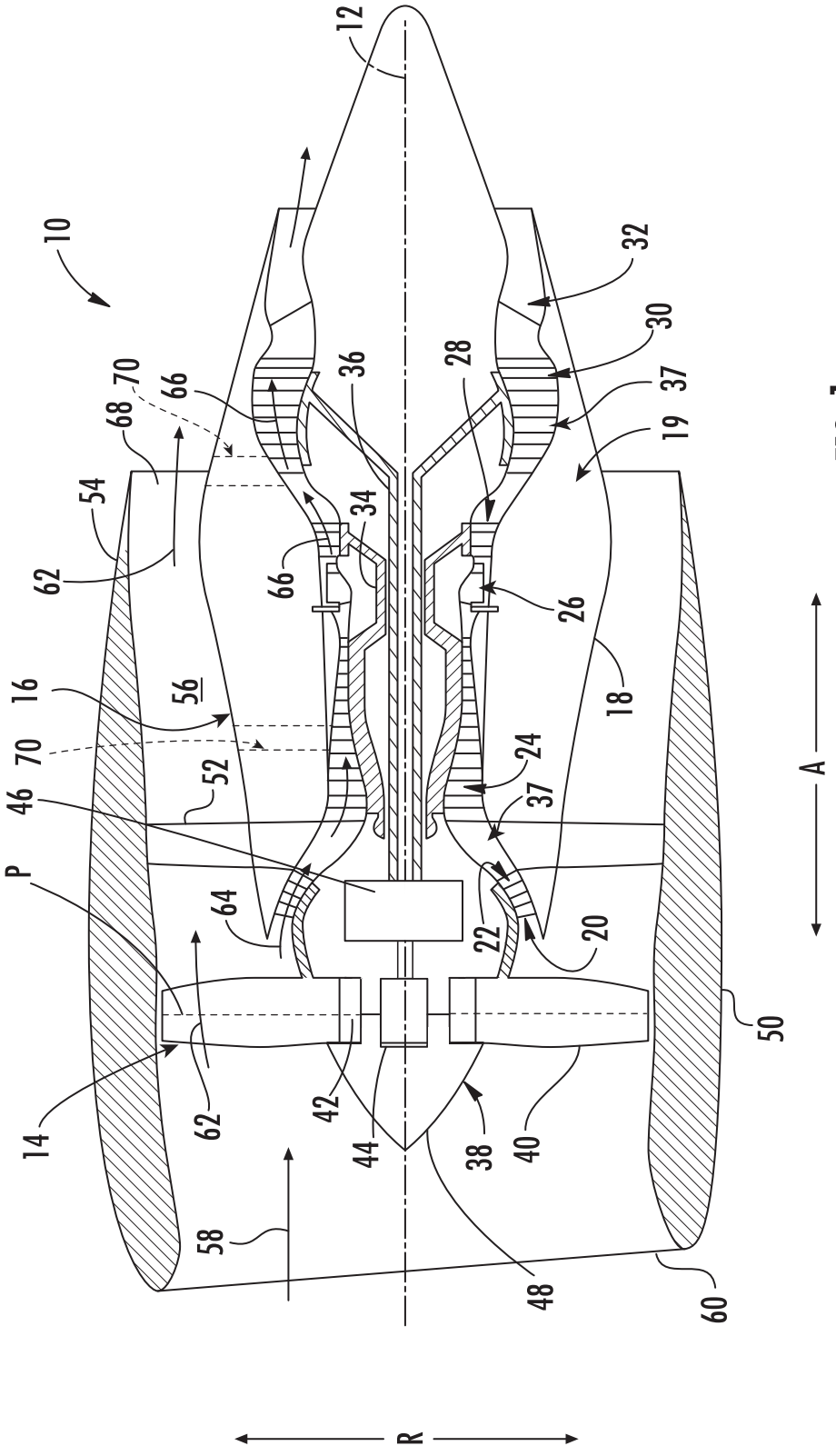
10
12
14
16
18
19
20
22
24
26
28
30
32
34
36
37
38
40
42
44
46
48
50
52
54
56
58
60
62
64
66
68
70
P
A
R

FIG. 1

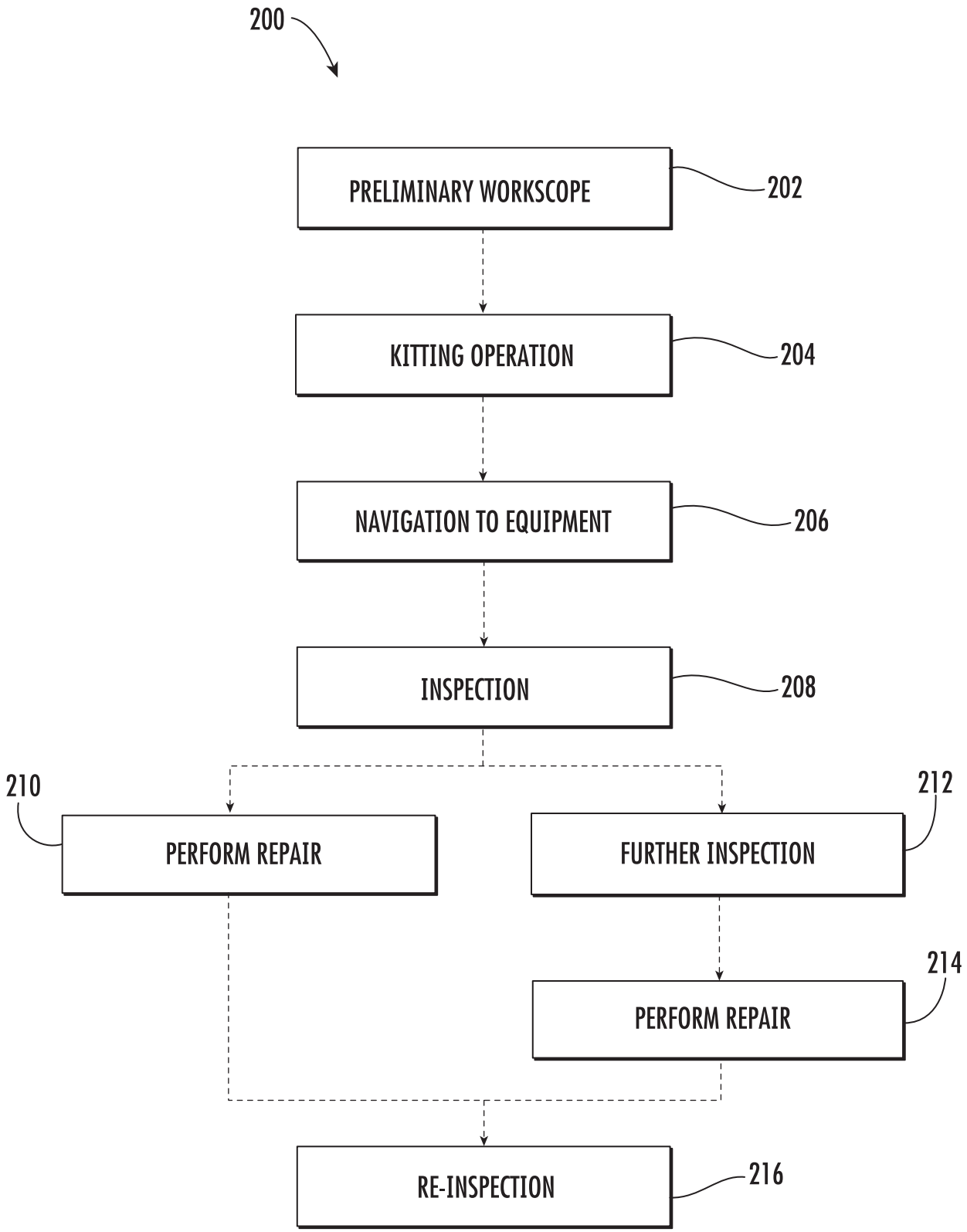
200
PRELIMINARY WORKSCOPE
202
KITTING OPERATION
204
NAVIGATION TO EQUIPMENT
206
INSPECTION
208
210
PERFORM REPAIR
212
FURTHER INSPECTION
214
PERFORM REPAIR
RE-INSPECTION
216

FIG. 2

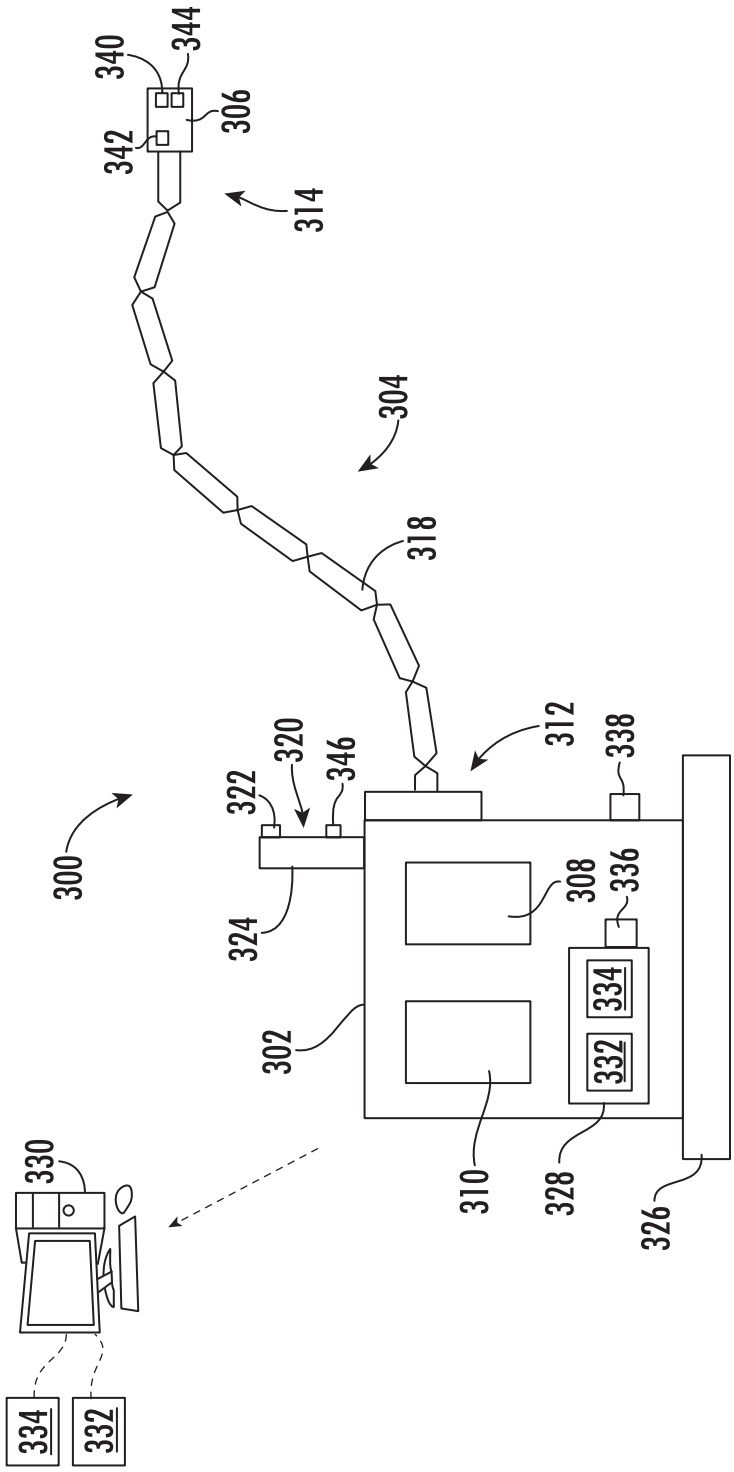
340
344
306
342
314
304
318
312
338
320
346
322
324
308
336
334
332
302
310
328
326
330
334
332
300

FIG. 3

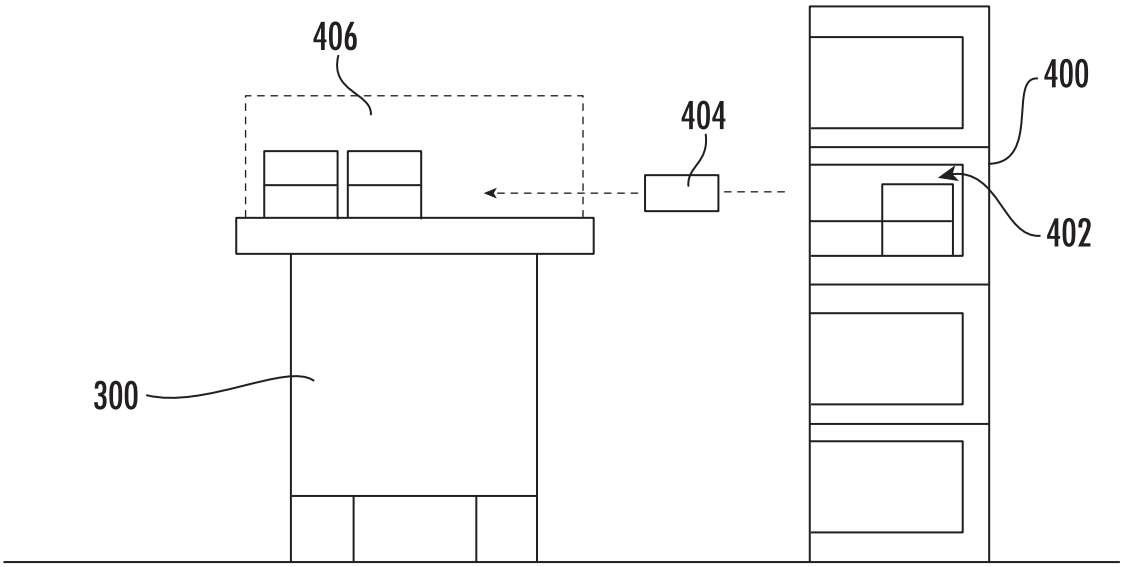
406
404
400
402
300

FIG. 4

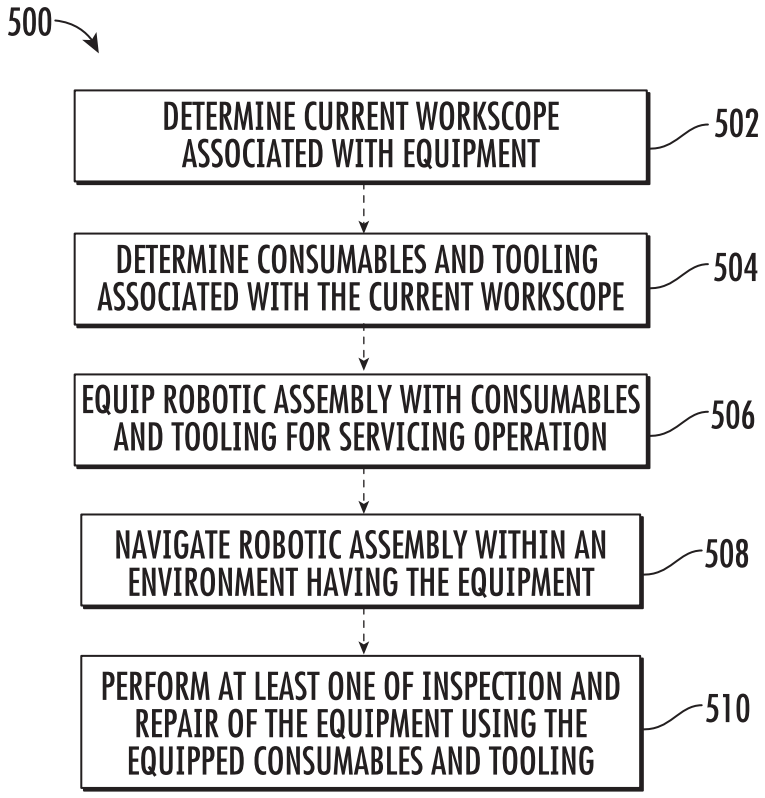
500
DETERMINE CURRENT WORKSCOPE ASSOCIATED WITH EQUIPMENT
502
DETERMINE CONSUMABLES AND TOOLING ASSOCIATED WITH THE CURRENT WORKSCOPE
504
EQUIP ROBOTIC ASSEMBLY WITH CONSUMABLES AND TOOLING FOR SERVICING OPERATION
506
NAVIGATE ROBOTIC ASSEMBLY WITHIN AN ENVIRONMENT HAVING THE EQUIPMENT
508
PERFORM AT LEAST ONE OF INSPECTION AND REPAIR OF THE EQUIPMENT USING THE EQUIPPED CONSUMABLES AND TOOLING
510

FIG. 5

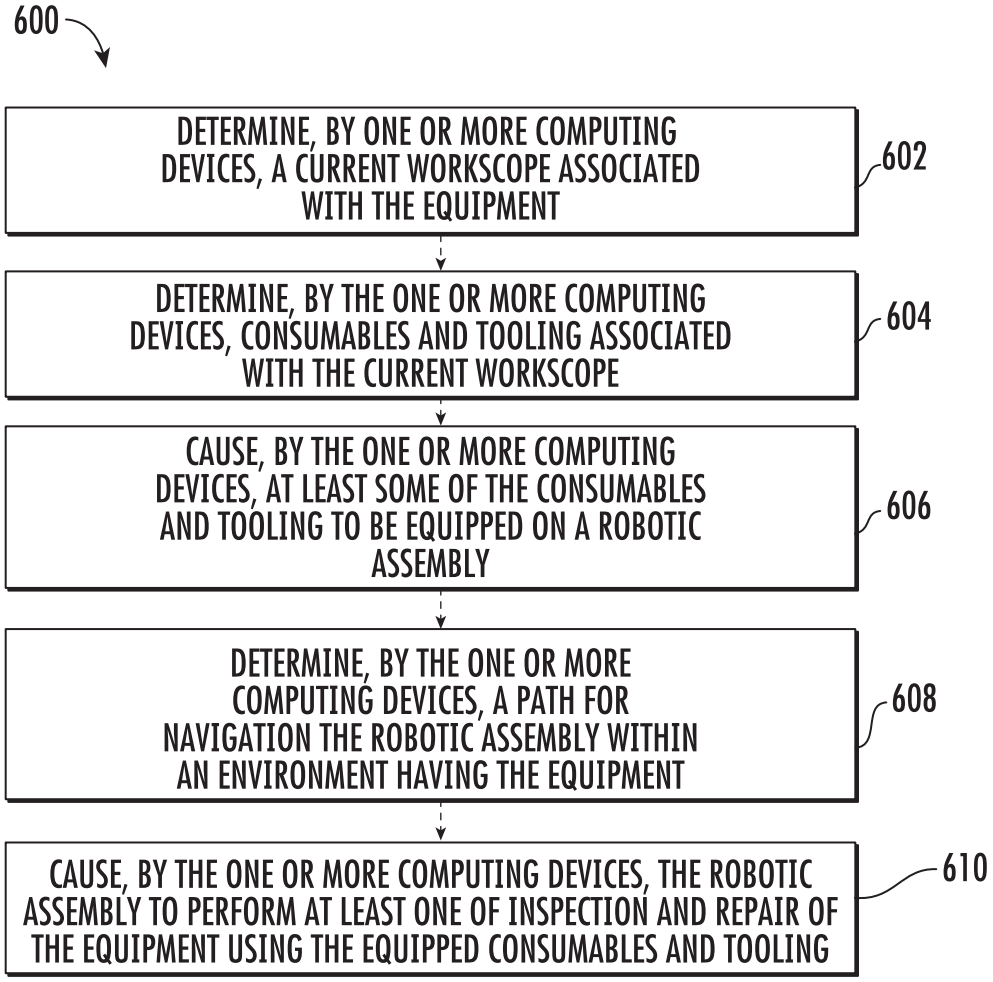
600
DETERMINE, BY ONE OR MORE COMPUTING DEVICES, A CURRENT WORKSCOPE ASSOCIATED WITH THE EQUIPMENT
602
DETERMINE, BY THE ONE OR MORE COMPUTING DEVICES, CONSUMABLES AND TOOLING ASSOCIATED WITH THE CURRENT WORKSCOPE
604
CAUSE, BY THE ONE OR MORE COMPUTING DEVICES, AT LEAST SOME OF THE CONSUMABLES AND TOOLING TO BE EQUIPPED ON A ROBOTIC ASSEMBLY
606
DETERMINE, BY THE ONE OR MORE COMPUTING DEVICES, A PATH FOR NAVIGATION THE ROBOTIC ASSEMBLY WITHIN AN ENVIRONMENT HAVING THE EQUIPMENT
608
CAUSE, BY THE ONE OR MORE COMPUTING DEVICES, THE ROBOTIC ASSEMBLY TO PERFORM AT LEAST ONE OF INSPECTION AND REPAIR OF THE EQUIPMENT USING THE EQUIPPED CONSUMABLES AND TOOLING
610

FIG. 6

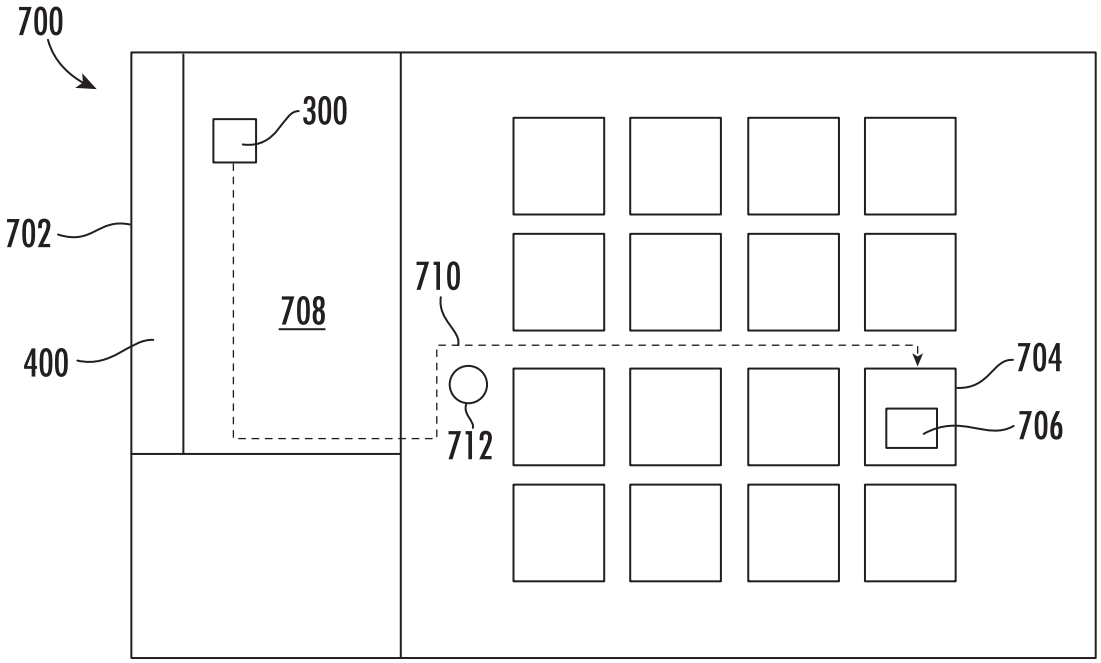
700
300
702
708
710
400
704
706
712

FIG. 7

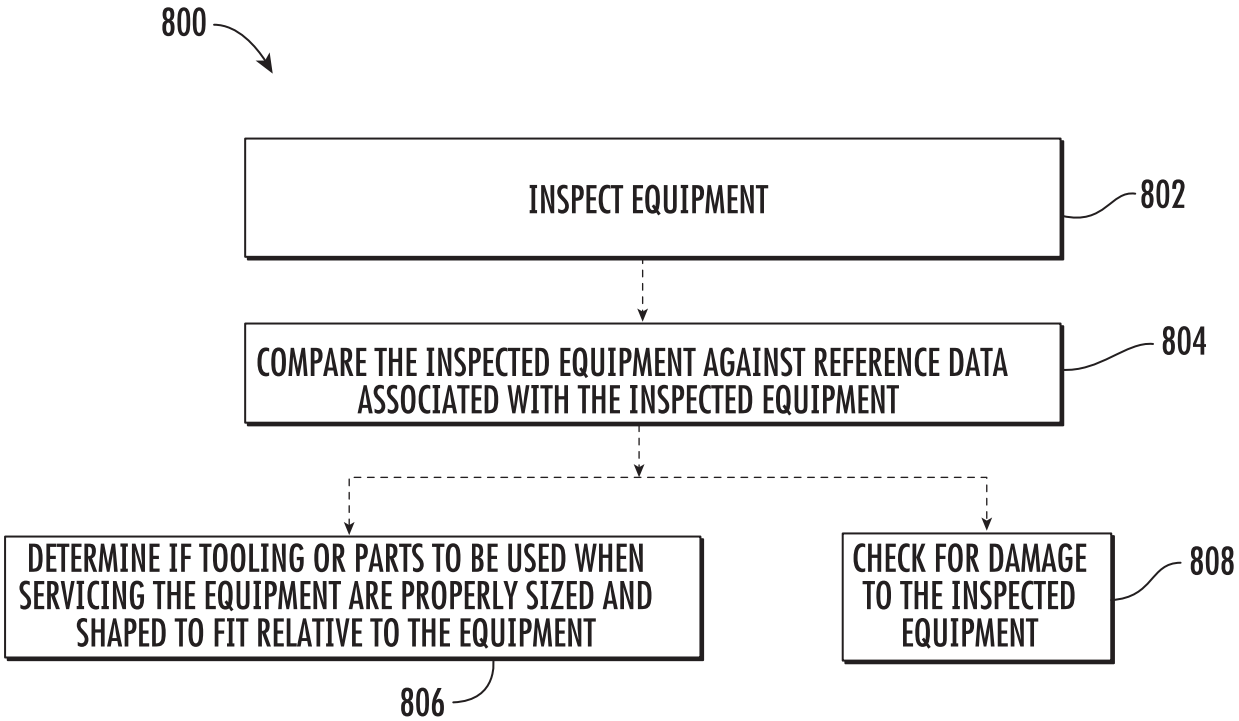
800
INSPECT EQUIPMENT
802
COMPARE THE INSPECTED EQUIPMENT AGAINST REFERENCE DATA ASSOCIATED WITH THE INSPECTED EQUIPMENT
804
DETERMINE IF TOOLING OR PARTS TO BE USED WHEN SERVICING THE EQUIPMENT ARE PROPERLY SIZED AND SHAPED TO FIT RELATIVE TO THE EQUIPMENT
806
CHECK FOR DAMAGE TO THE INSPECTED EQUIPMENT
808

FIG. 8

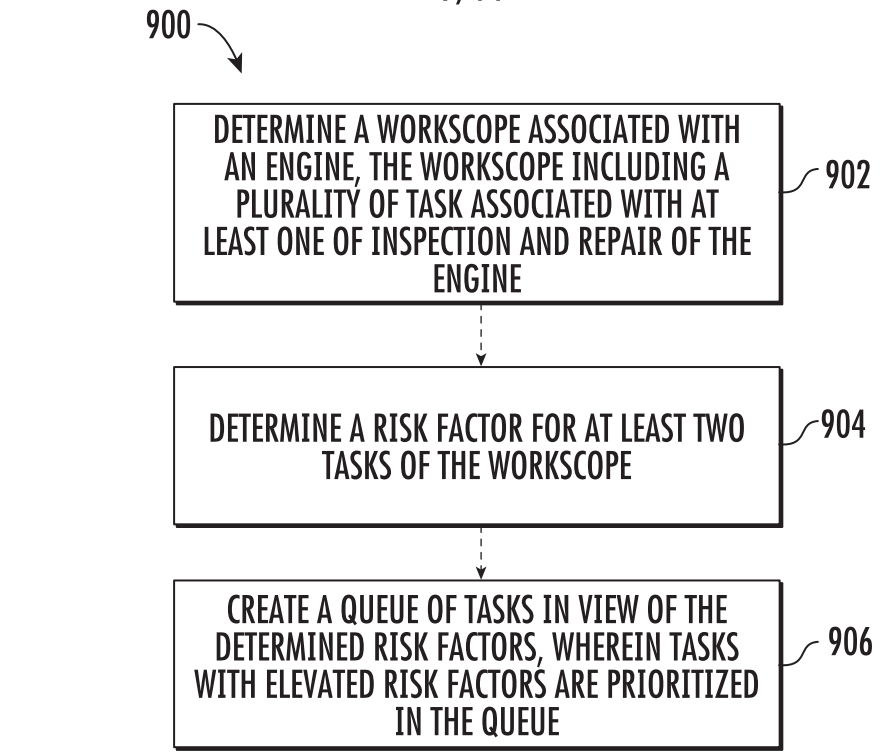
900
DETERMINE A WORKSCOPE ASSOCIATED WITH AN ENGINE, THE WORKSCOPE INCLUDING A PLURALITY OF TASK ASSOCIATED WITH AT LEAST ONE OF INSPECTION AND REPAIR OF THE ENGINE
902
DETERMINE A RISK FACTOR FOR AT LEAST TWO TASKS OF THE WORKSCOPE
904
CREATE A QUEUE OF TASKS IN VIEW OF THE DETERMINED RISK FACTORS, WHEREIN TASKS WITH ELEVATED RISK FACTORS ARE PRIORITIZED IN THE QUEUE
906

FIG. 9

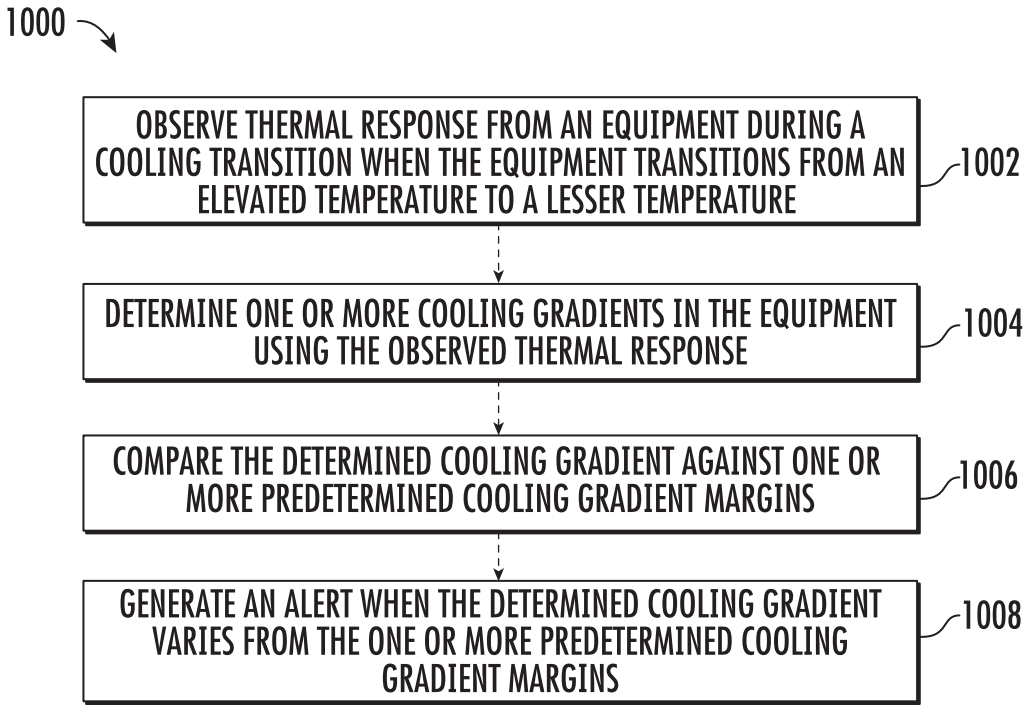
1000
OBSERVE THERMAL RESPONSE FROM AN EQUIPMENT DURING A COOLING TRANSITION WHEN THE EQUIPMENT TRANSITIONS FROM AN ELEVATED TEMPERATURE TO A LESSER TEMPERATURE
1002
DETERMINE ONE OR MORE COOLING GRADIENTS IN THE EQUIPMENT USING THE OBSERVED THERMAL RESPONSE
1004
COMPARE THE DETERMINED COOLING GRADIENT AGAINST ONE OR MORE PREDETERMINED COOLING GRADIENT MARGINS
1006
GENERATE AN ALERT WHEN THE DETERMINED COOLING GRADIENT VARIES FROM THE ONE OR MORE PREDETERMINED COOLING GRADIENT MARGINS
1008

FIG. 10

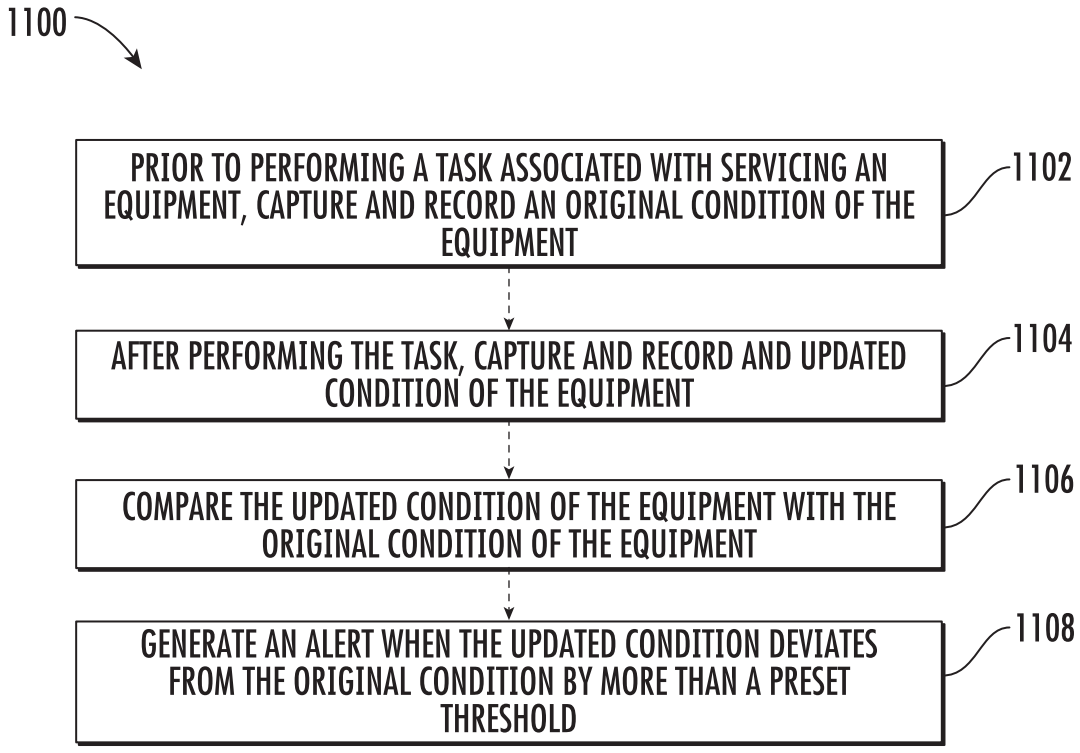
1100
PRIOR TO PERFORMING A TASK ASSOCIATED WITH SERVICING AN EQUIPMENT, CAPTURE AND RECORD AN ORIGINAL CONDITION OF THE EQUIPMENT
1102
AFTER PERFORMING THE TASK, CAPTURE AND RECORD AND UPDATED CONDITION OF THE EQUIPMENT
1104
COMPARE THE UPDATED CONDITION OF THE EQUIPMENT WITH THE ORIGINAL CONDITION OF THE EQUIPMENT
1106
GENERATE AN ALERT WHEN THE UPDATED CONDITION DEVIATES FROM THE ORIGINAL CONDITION BY MORE THAN A PRESET THRESHOLD
1108

FIG. 11

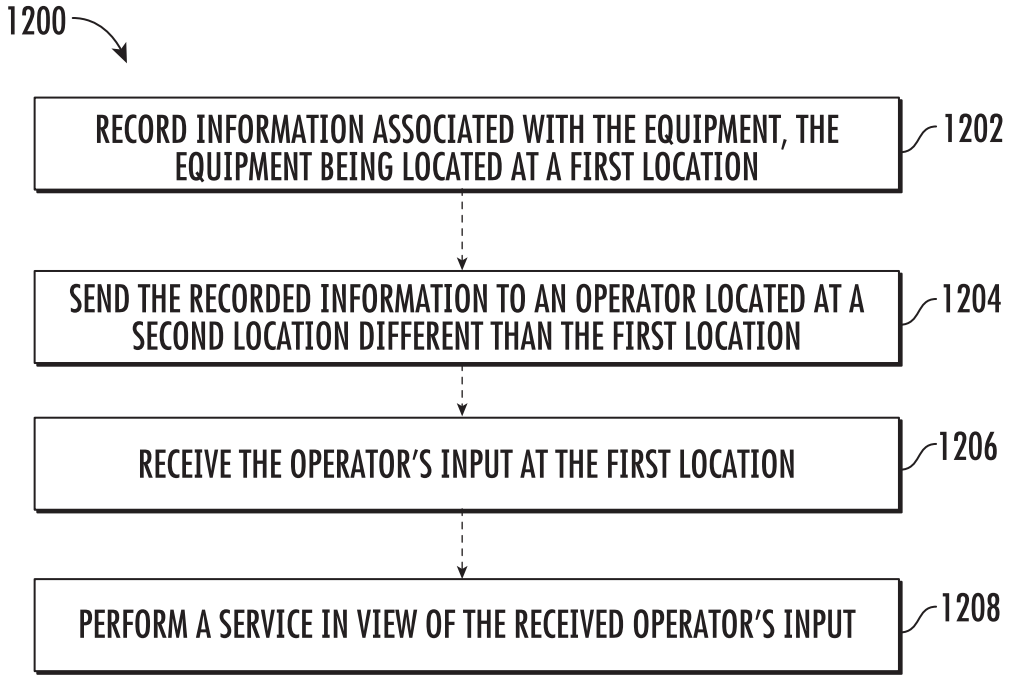
1200
RECORD INFORMATION ASSOCIATED WITH THE EQUIPMENT, THE EQUIPMENT BEING LOCATED AT A FIRST LOCATION
1202
SEND THE RECORDED INFORMATION TO AN OPERATOR LOCATED AT A SECOND LOCATION DIFFERENT THAN THE FIRST LOCATION
1204
RECEIVE THE OPERATOR'S INPUT AT THE FIRST LOCATION
1206
PERFORM A SERVICE IN VIEW OF THE RECEIVED OPERATOR'S INPUT
1208

FIG. 12

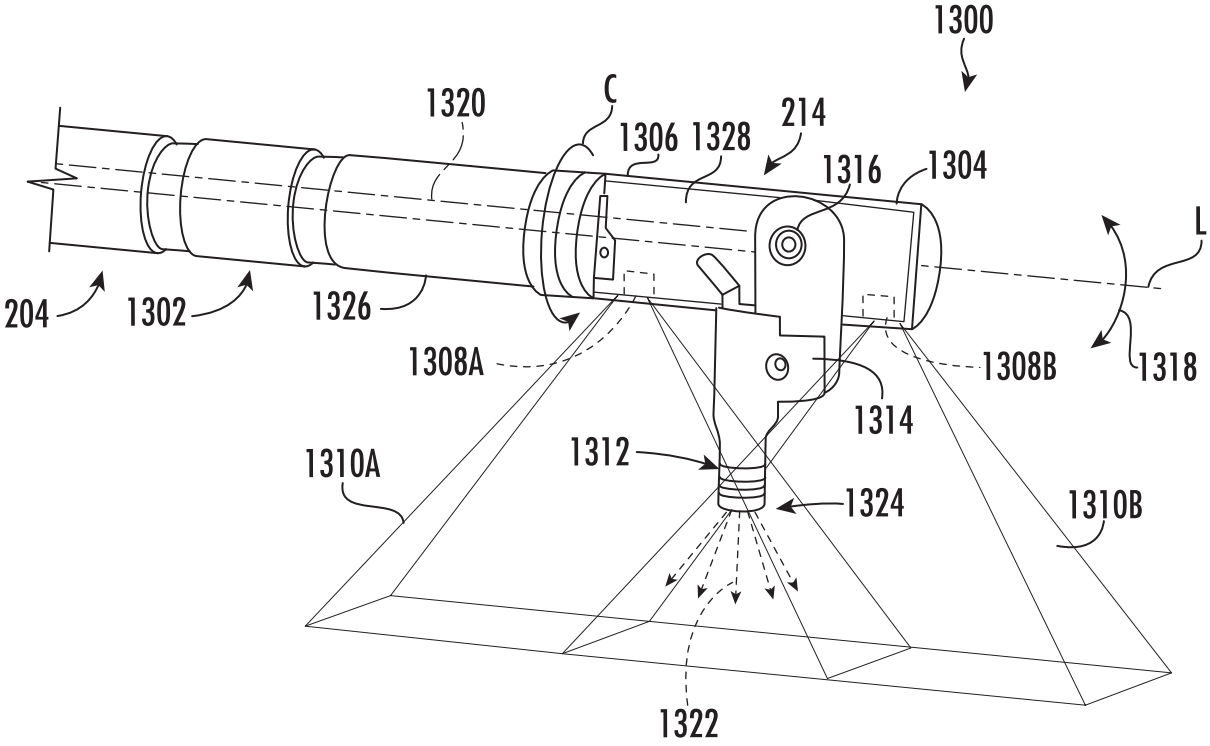
1300
1320
C
1306
1328
214
1316
1304
L
204
1302
1326
1308A
1308B
1318
1314
1312
1310A
1324
1310B
1322

FIG. 13

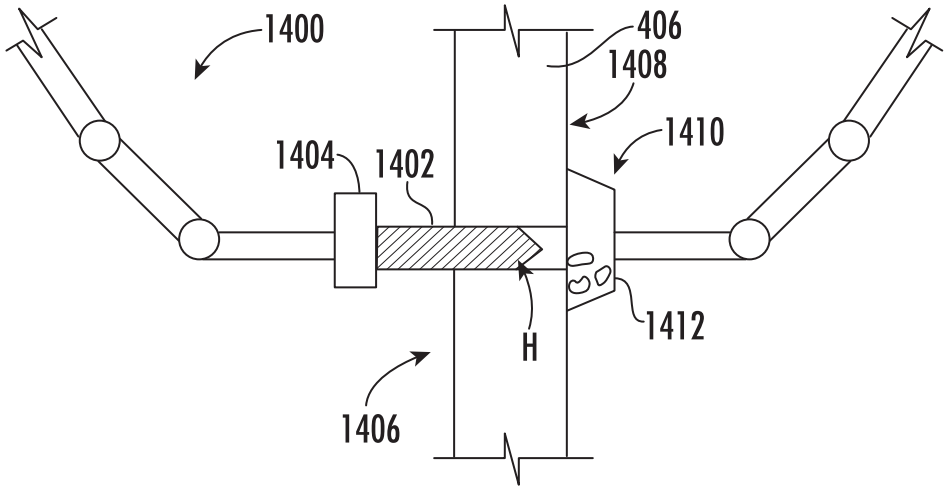
1400
406
1408
1410
1404
1402
H
1412
1406

FIG. 14

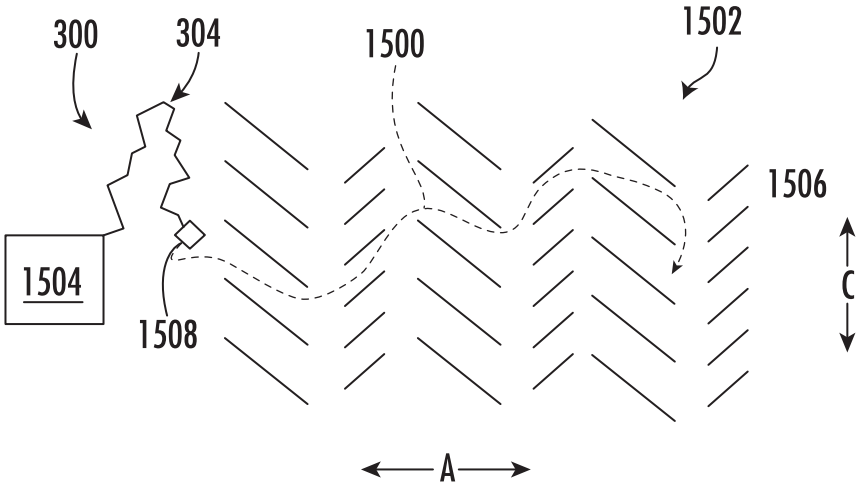
300
304
1500
1502
1506
1504
1508
C
A

FIG. 15

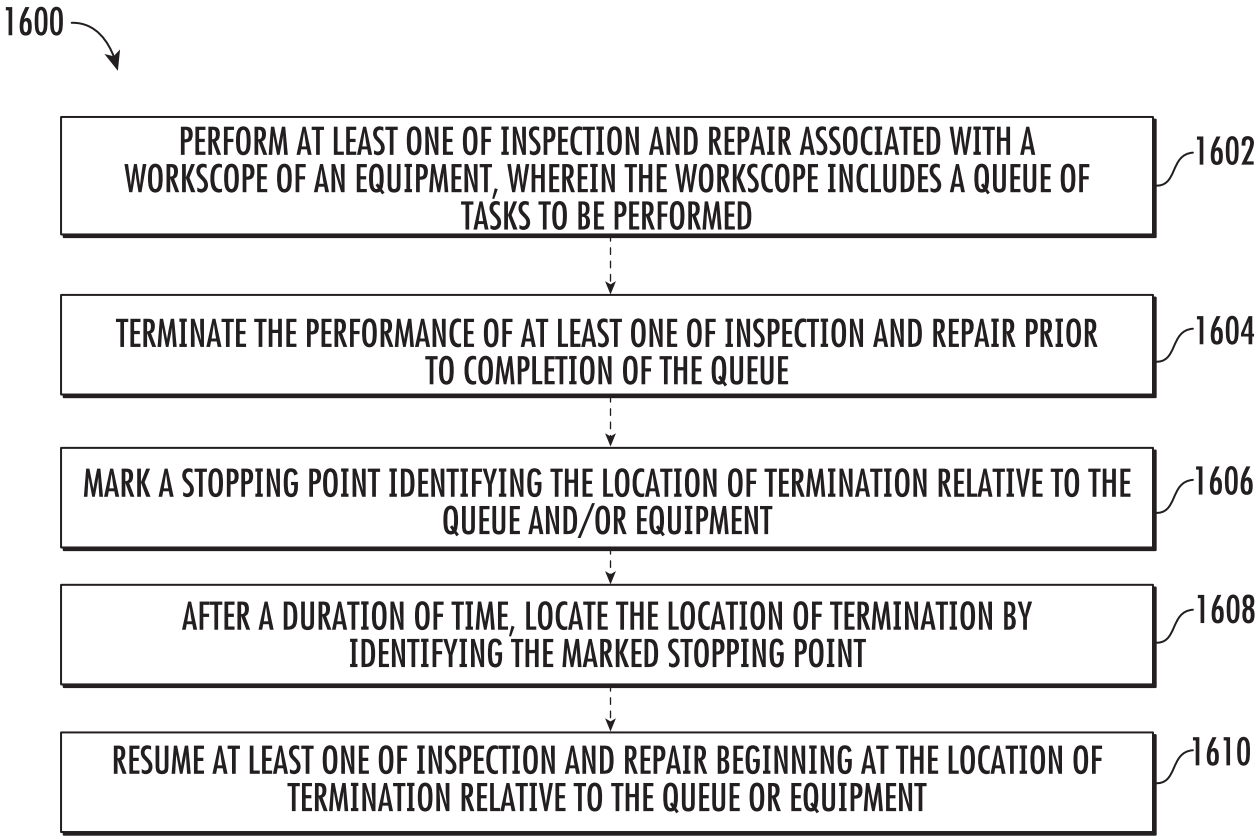
1600
PERFORM AT LEAST ONE OF INSPECTION AND REPAIR ASSOCIATED WITH A WORKSCOPE OF AN EQUIPMENT, WHEREIN THE WORKSCOPE INCLUDES A QUEUE OF TASKS TO BE PERFORMED
1602
TERMINATE THE PERFORMANCE OF AT LEAST ONE OF INSPECTION AND REPAIR PRIOR TO COMPLETION OF THE QUEUE
1604
MARK A STOPPING POINT IDENTIFYING THE LOCATION OF TERMINATION RELATIVE TO THE QUEUE AND/OR EQUIPMENT
1606
AFTER A DURATION OF TIME, LOCATE THE LOCATION OF TERMINATION BY IDENTIFYING THE MARKED STOPPING POINT
1608
RESUME AT LEAST ONE OF INSPECTION AND REPAIR BEGINNING AT THE LOCATION OF TERMINATION RELATIVE TO THE QUEUE OR EQUIPMENT
1610

FIG. 16

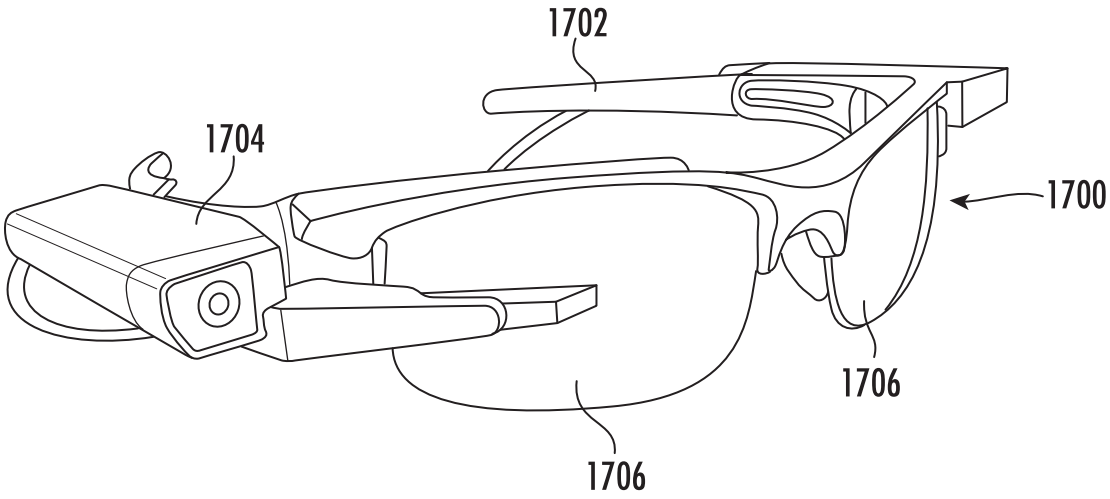
1702
1704
1700
1706
1706

FIG. 17

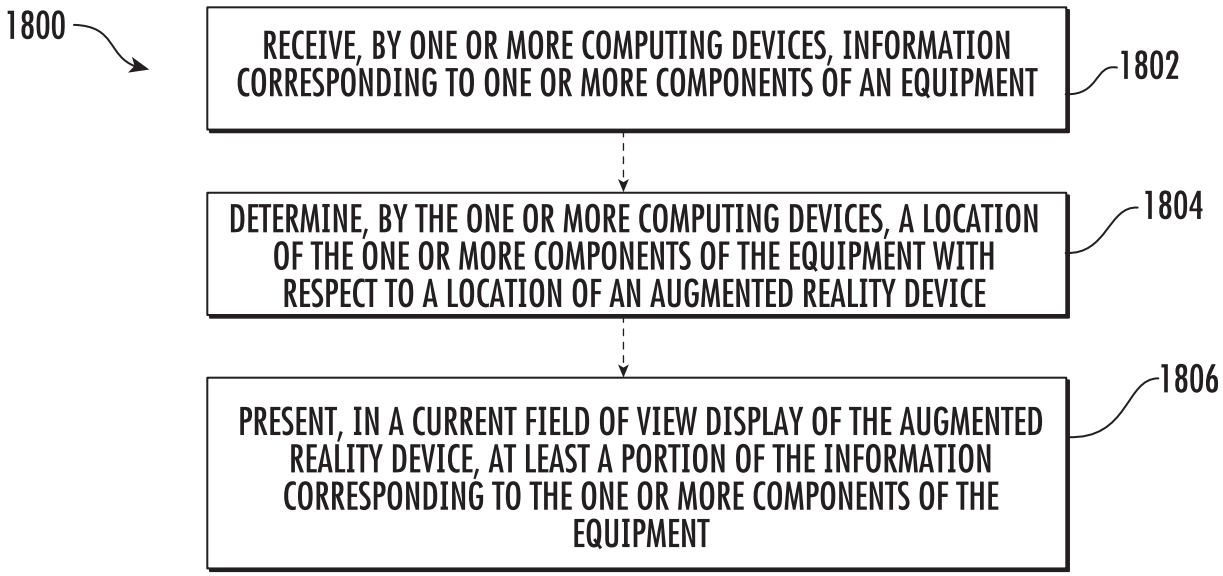
1800
RECEIVE, BY ONE OR MORE COMPUTING DEVICES, INFORMATION CORRESPONDING TO ONE OR MORE COMPONENTS OF AN EQUIPMENT
1802
DETERMINE, BY THE ONE OR MORE COMPUTING DEVICES, A LOCATION OF THE ONE OR MORE COMPONENTS OF THE EQUIPMENT WITH RESPECT TO A LOCATION OF AN AUGMENTED REALITY DEVICE
1804
PRESENT, IN A CURRENT FIELD OF VIEW DISPLAY OF THE AUGMENTED REALITY DEVICE, AT LEAST A PORTION OF THE INFORMATION CORRESPONDING TO THE ONE OR MORE COMPONENTS OF THE EQUIPMENT
1806

FIG. 18

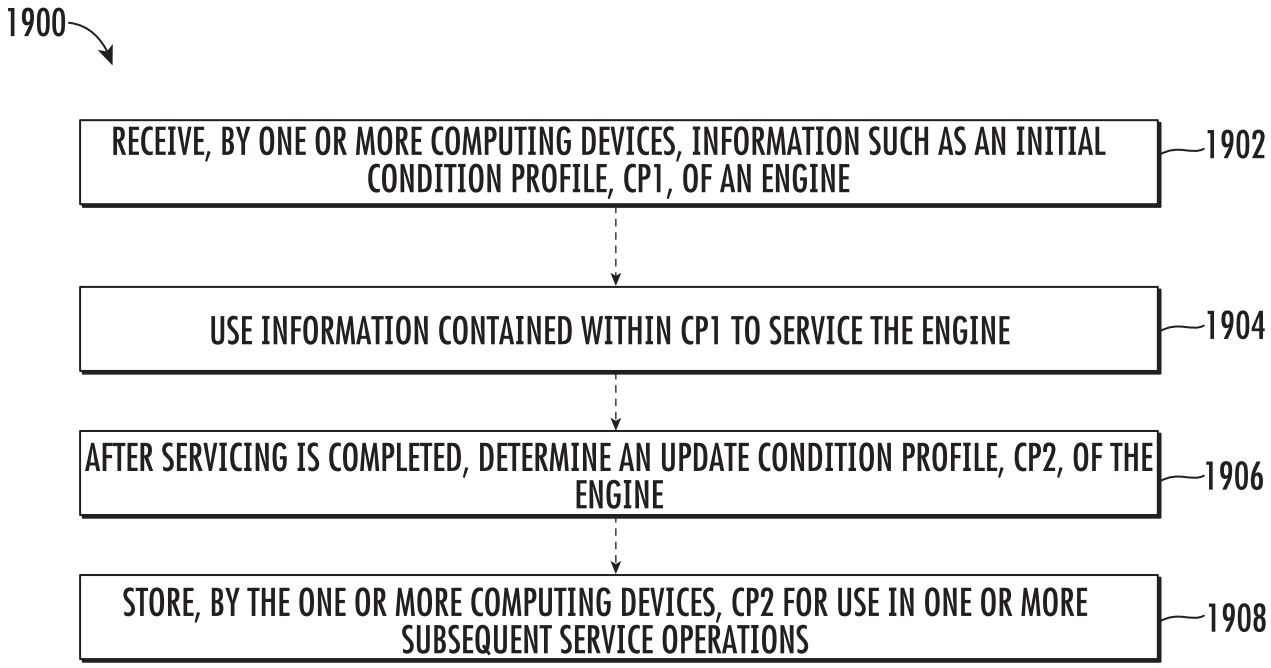
1900
RECEIVE, BY ONE OR MORE COMPUTING DEVICES, INFORMATION SUCH AS AN INITIAL CONDITION PROFILE, CP1, OF AN ENGINE
1902
USE INFORMATION CONTAINED WITHIN CP1 TO SERVICE THE ENGINE
1904
AFTER SERVICING IS COMPLETED, DETERMINE AN UPDATE CONDITION PROFILE, CP2, OF THE ENGINE
1906
STORE, BY THE ONE OR MORE COMPUTING DEVICES, CP2 FOR USE IN ONE OR MORE SUBSEQUENT SERVICE OPERATIONS
1908

FIG. 19

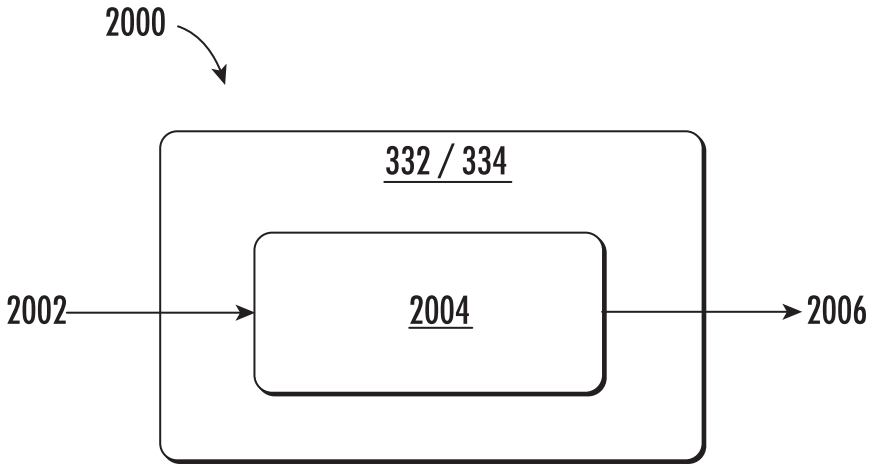
2000
332 / 334
2002
2004
2006

FIG. 20

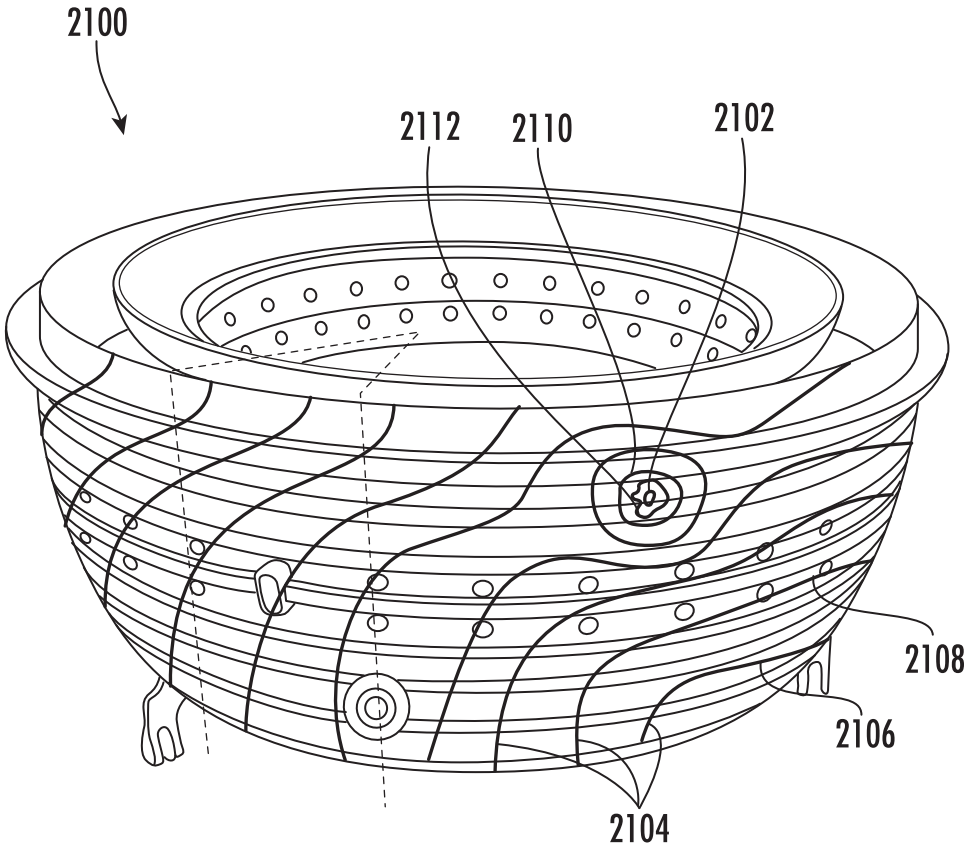

FIG. 21

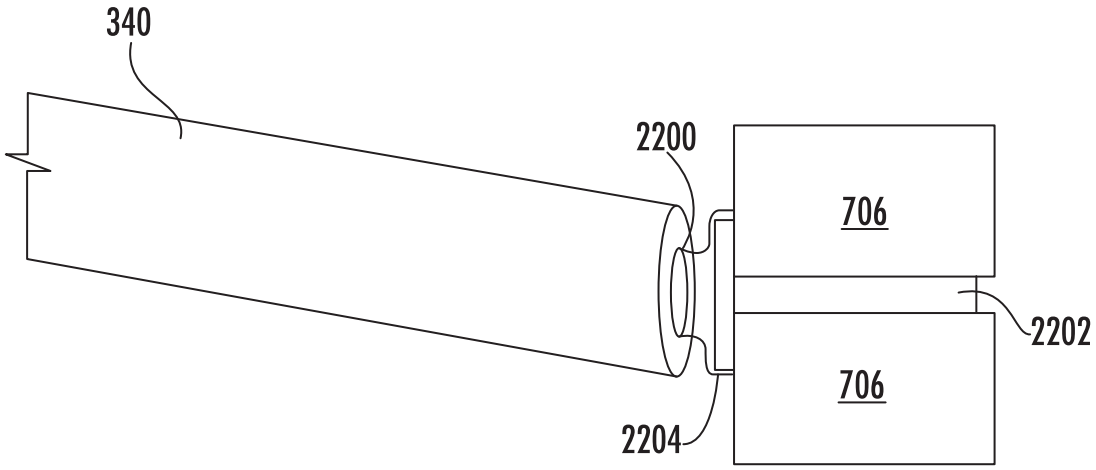

FIG. 22

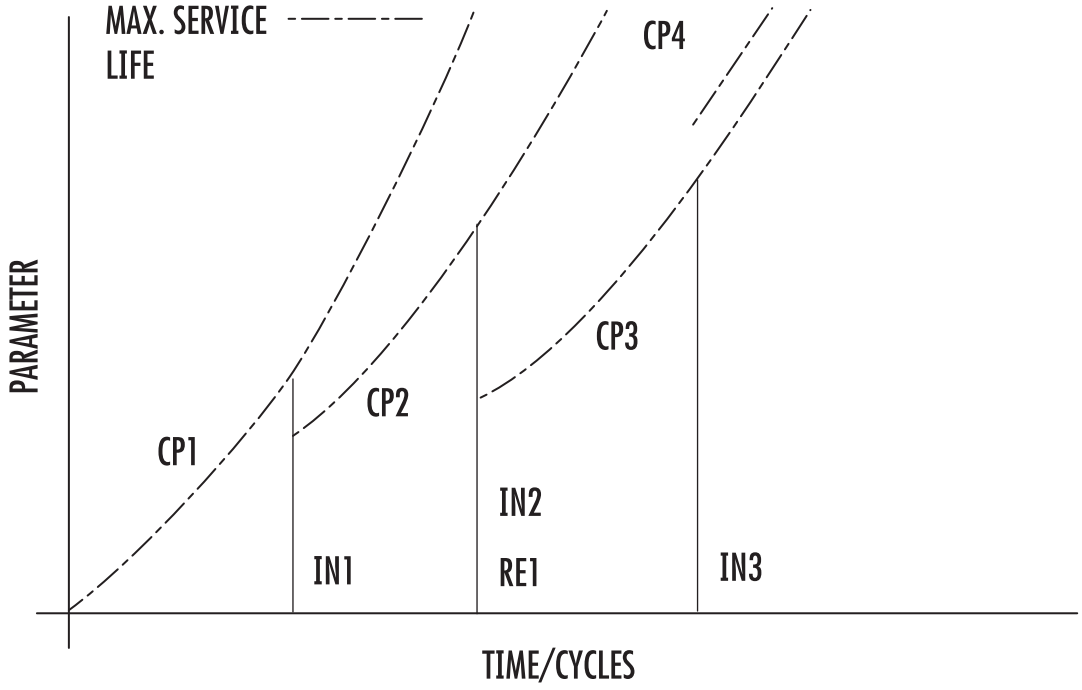
MAX. SERVICE LIFE
CP4
PARAMETER
CP3
CP2
CP1
IN2
IN1
RE1
IN3
TIME/CYCLES

FIG. 23