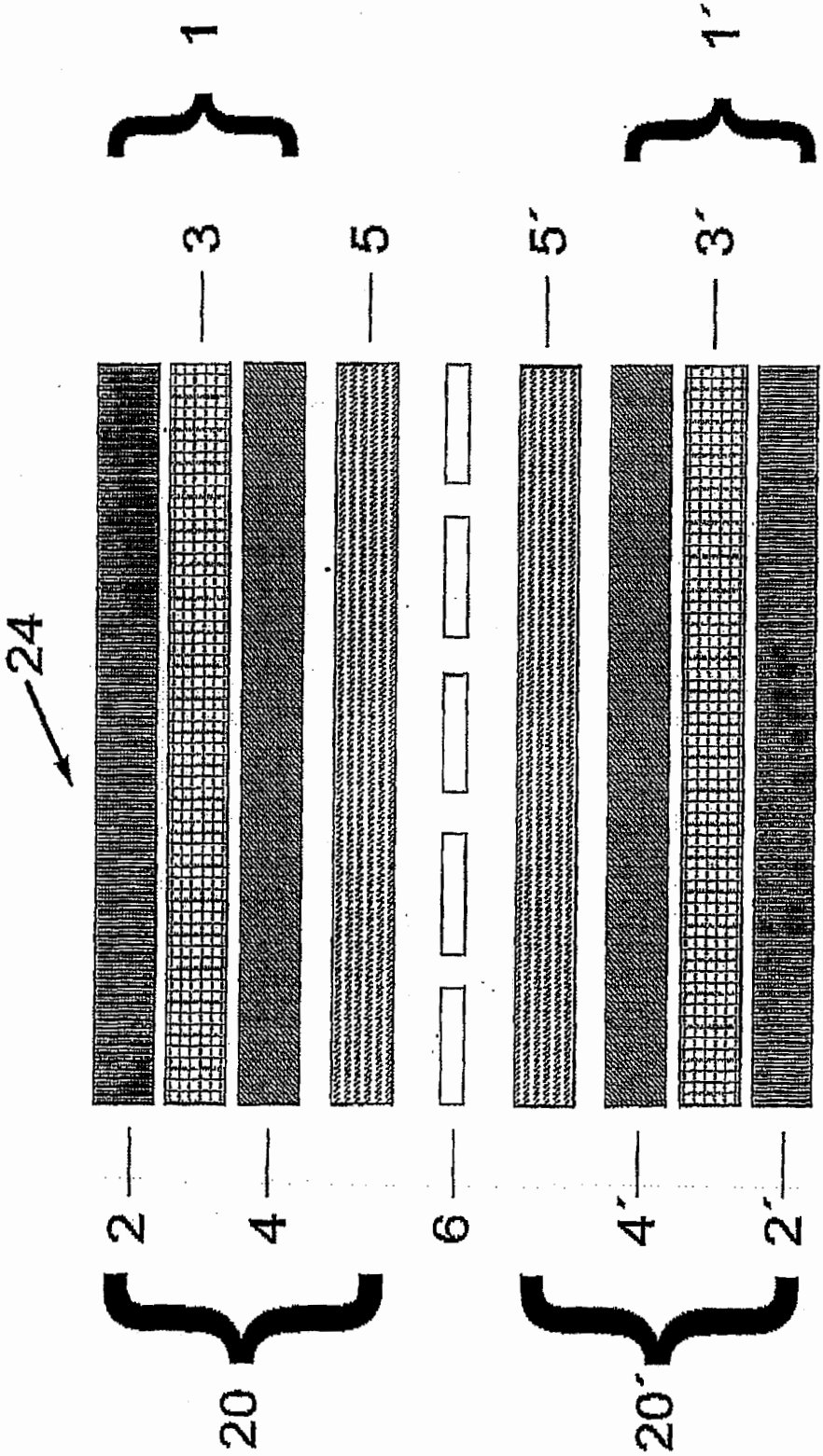

figure 1

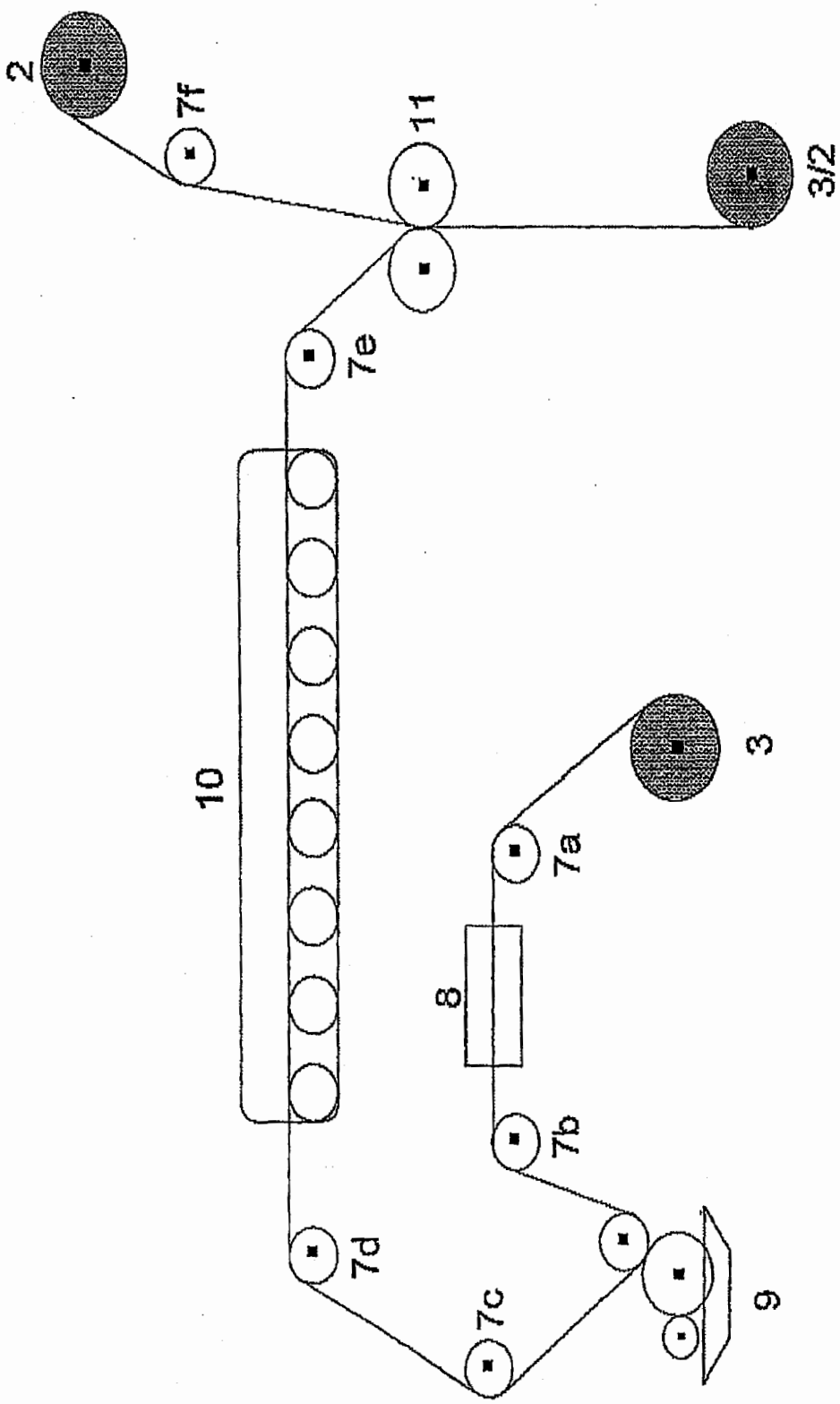

figure 2

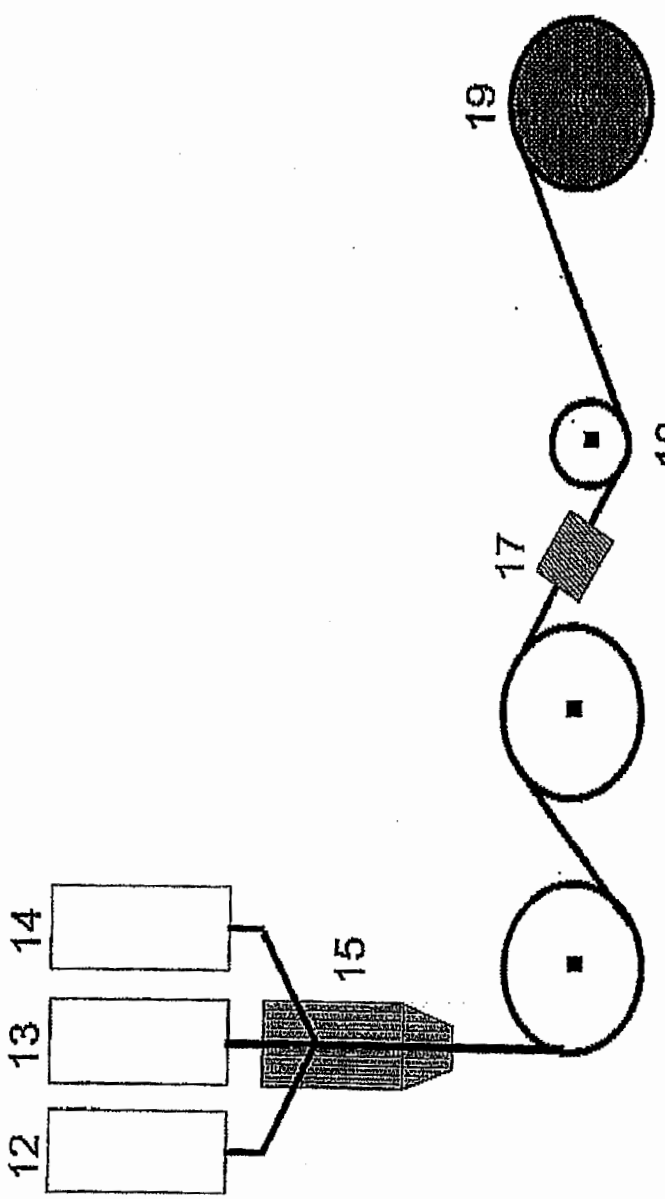

figure 3

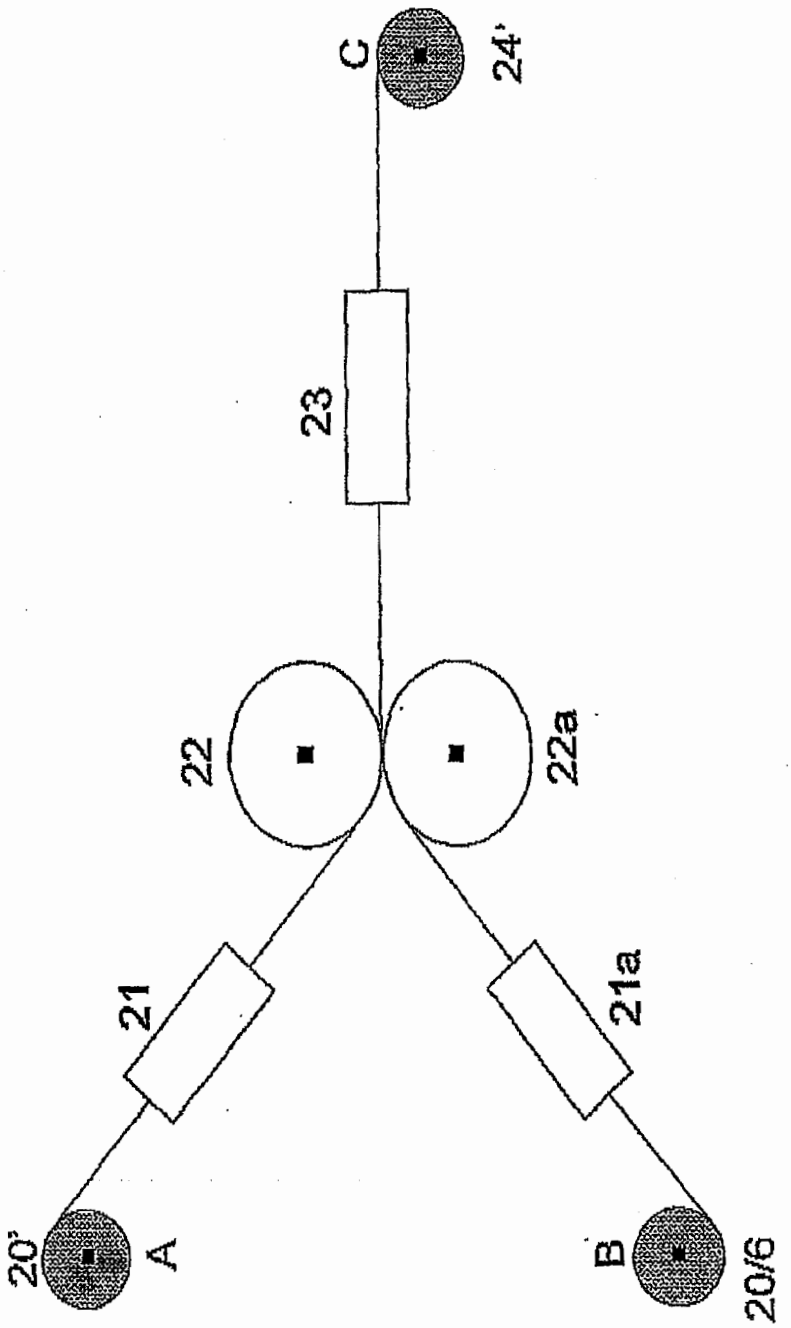

figure 4