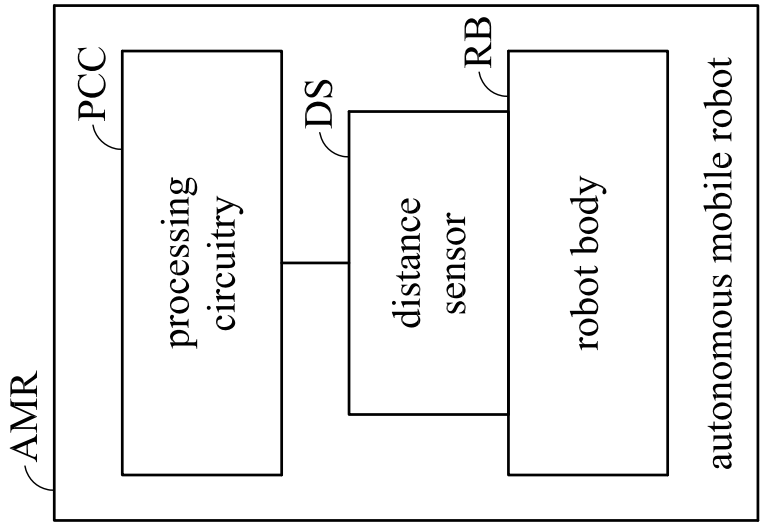
AMR
PCC
processing circuitry
DS
distance sensor
RB
robot body
autonomous mobile robot

FIG. 1

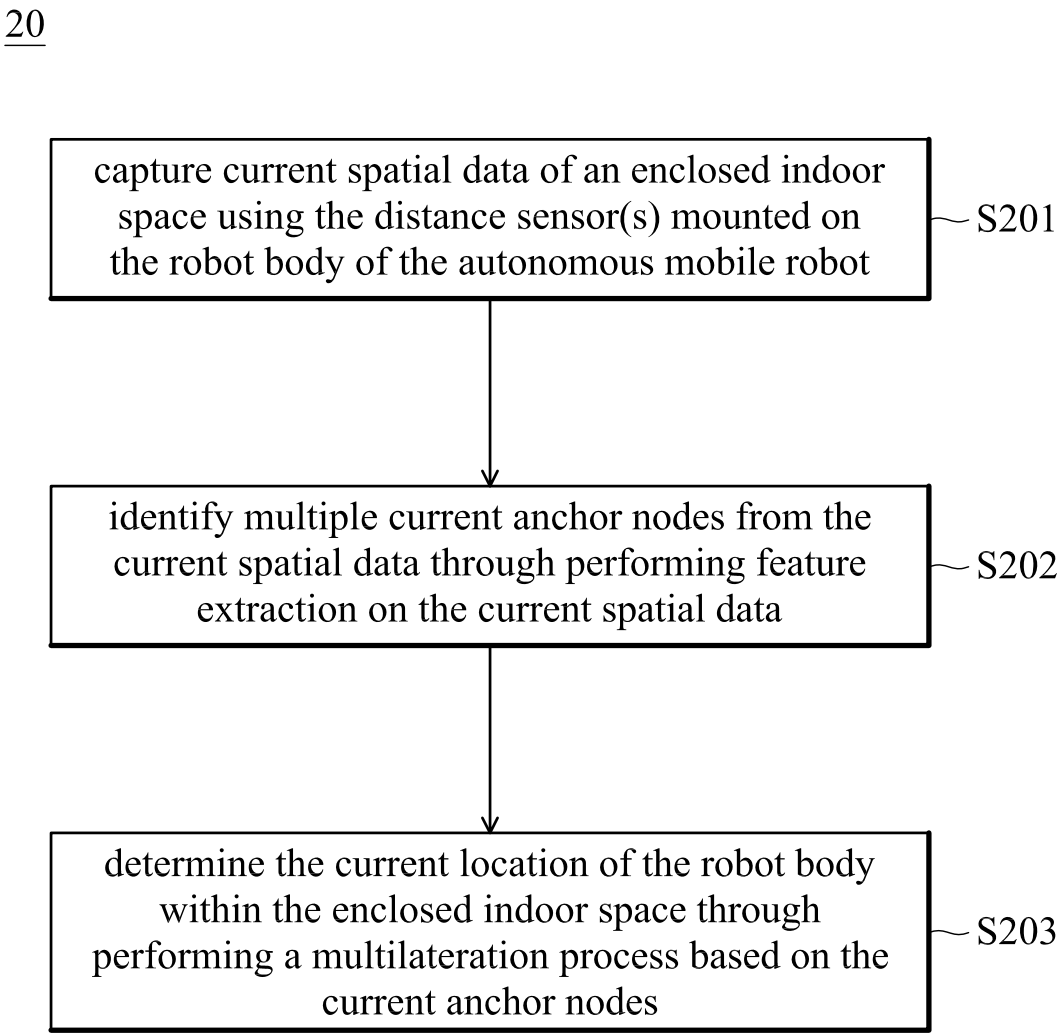
20
capture current spatial data of an enclosed indoor space using the distance sensor(s) mounted on the robot body of the autonomous mobile robot
S201
identify multiple current anchor nodes from the current spatial data through performing feature extraction on the current spatial data
S202
determine the current location of the robot body within the enclosed indoor space through performing a multilateration process based on the current anchor nodes
S203

FIG. 2

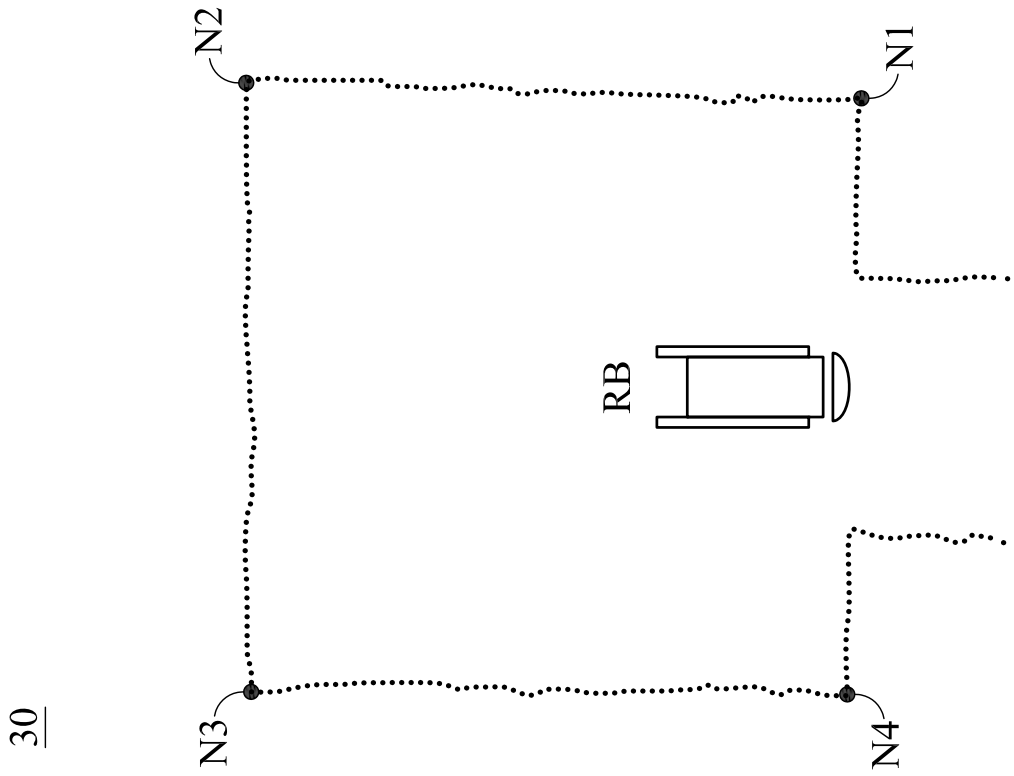

FIG. 3

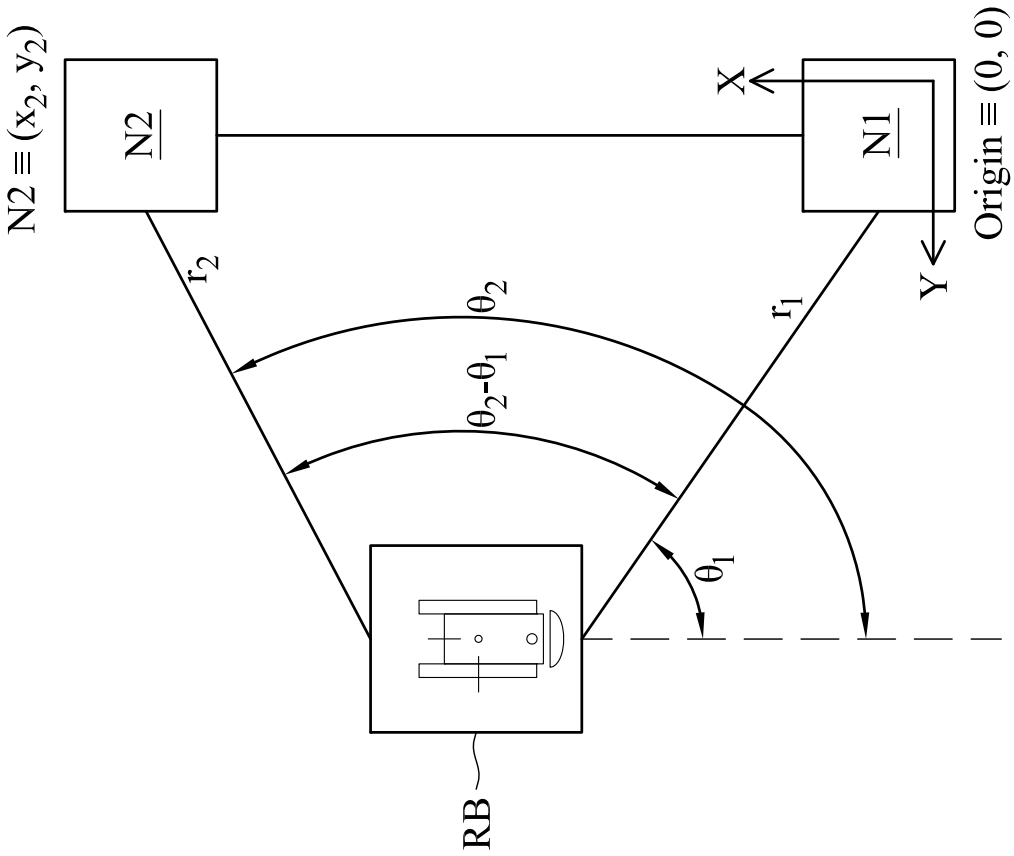

FIG. 4A

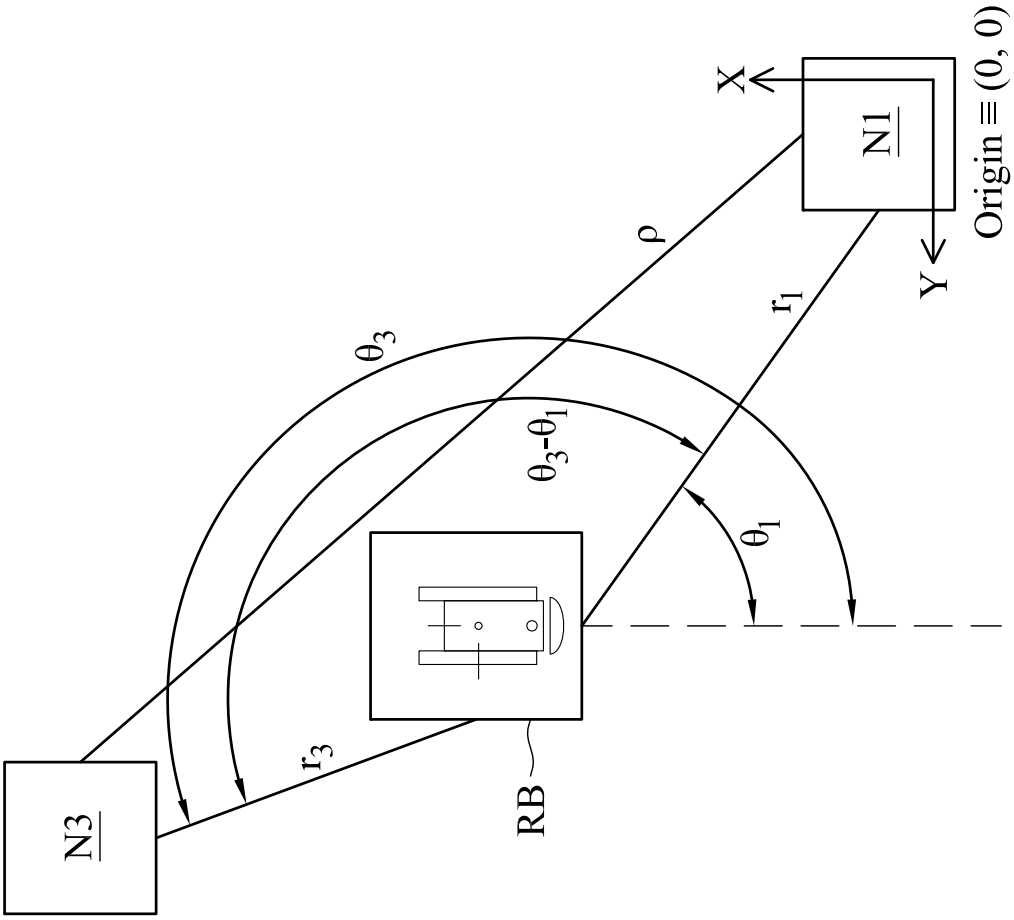

FIG. 4B

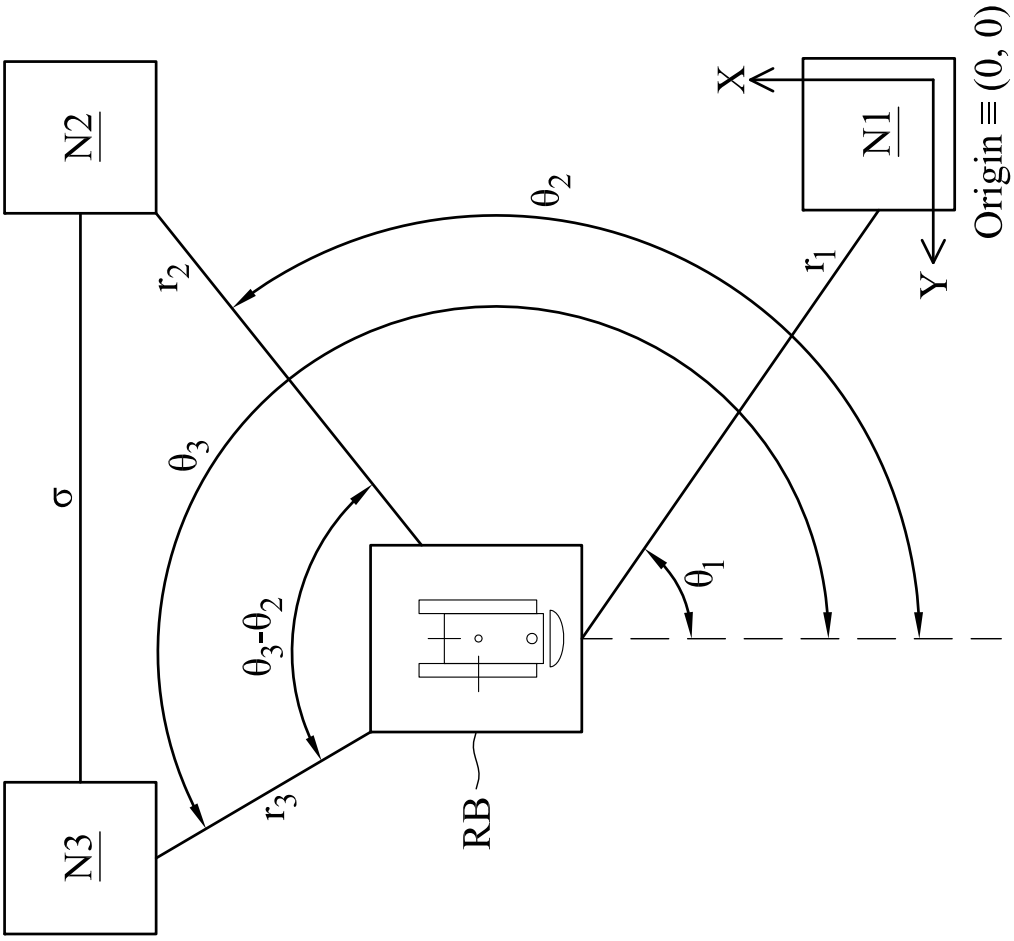

FIG. 4C

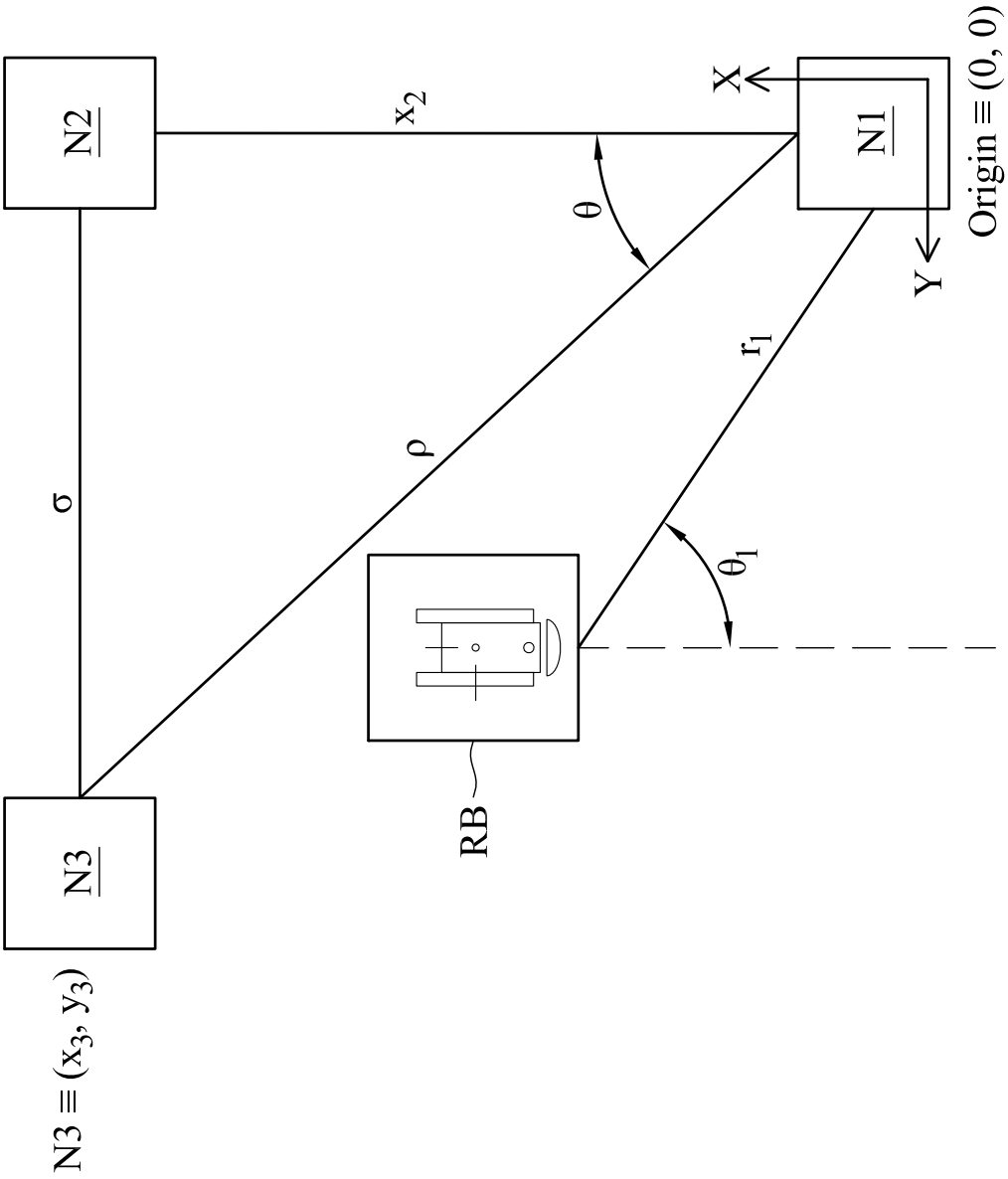

FIG. 4D

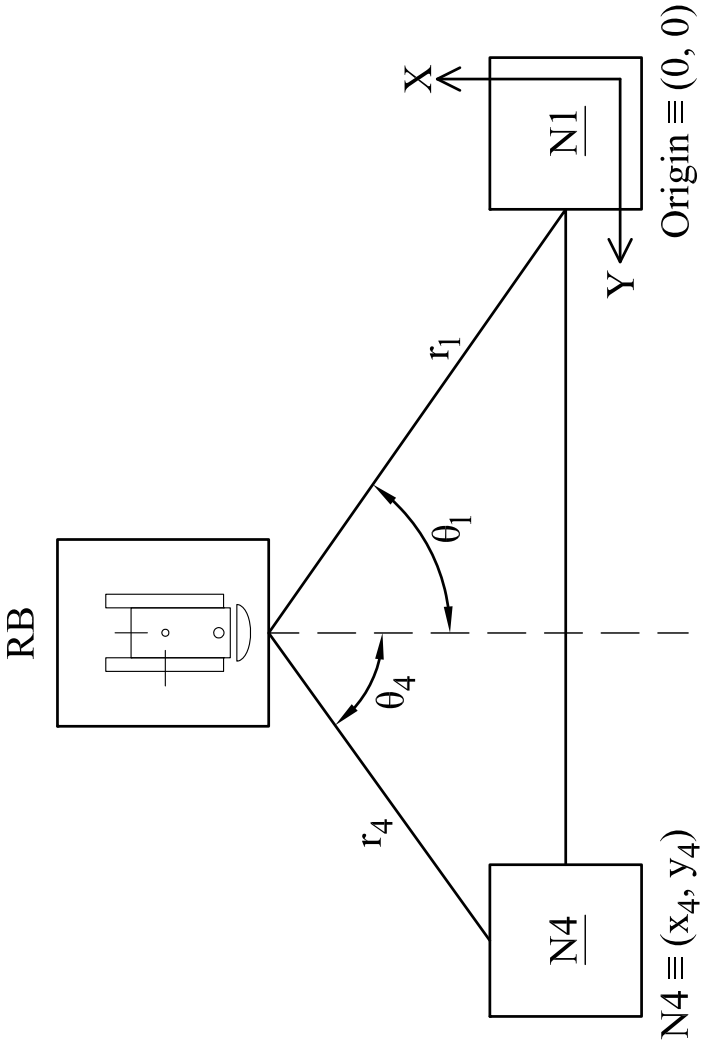

FIG. 4E

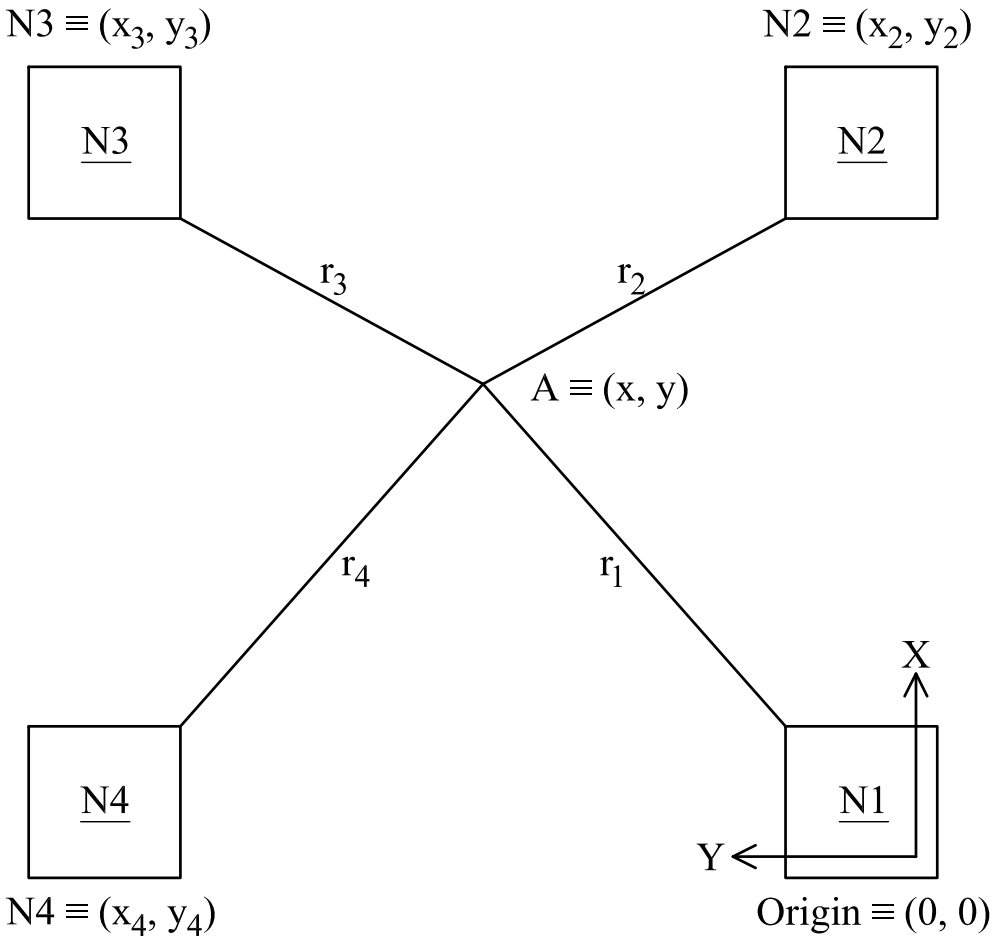

FIG. 4F

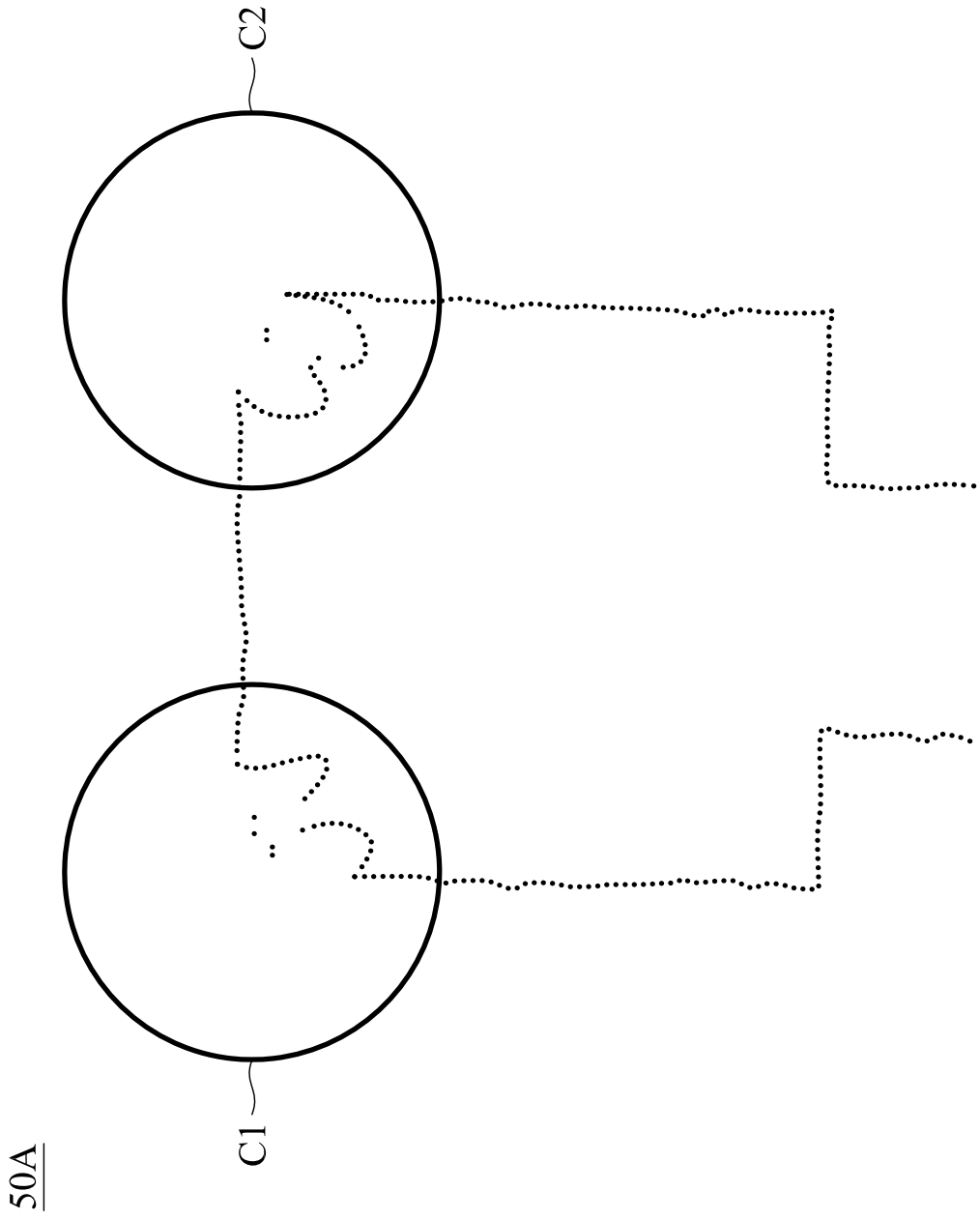

FIG. 5A

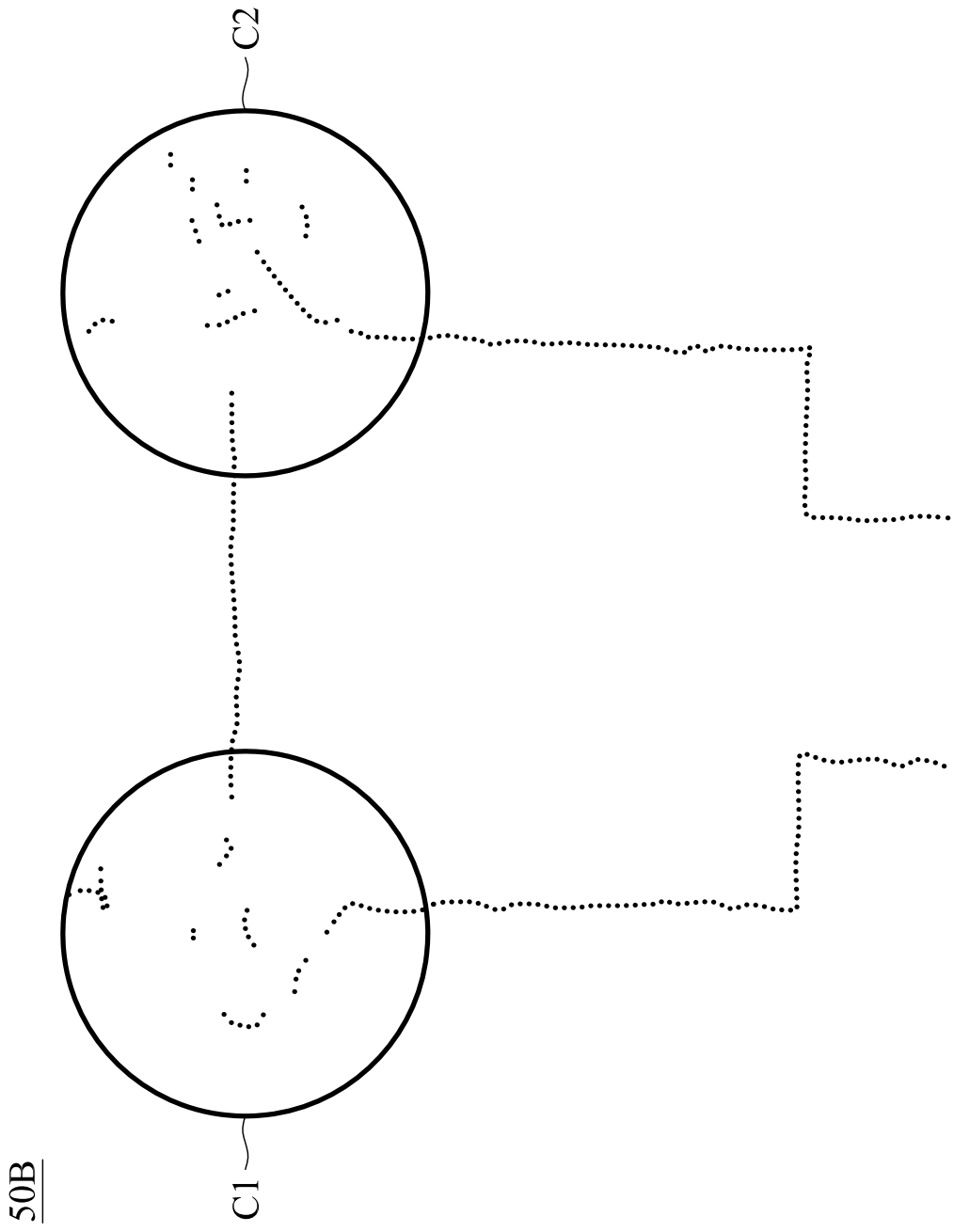

FIG. 5B

60A

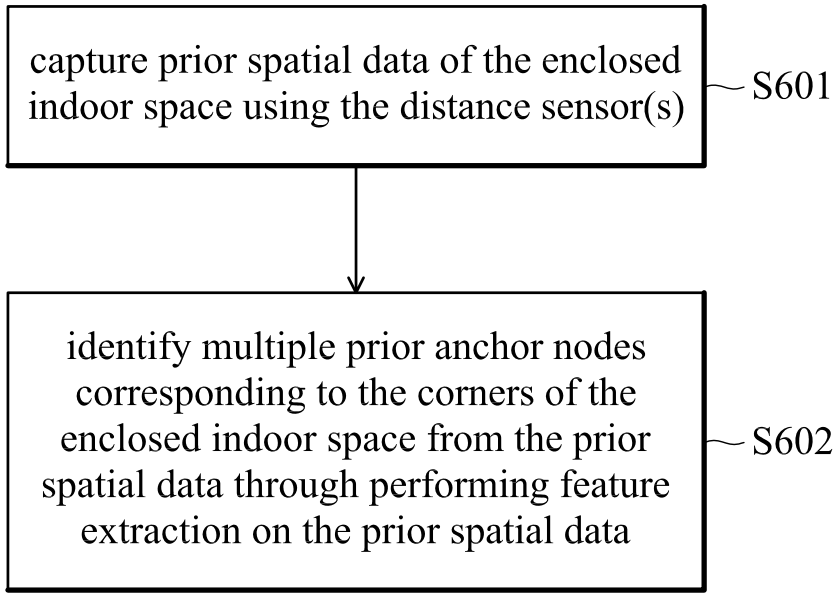

FIG. 6A

60B

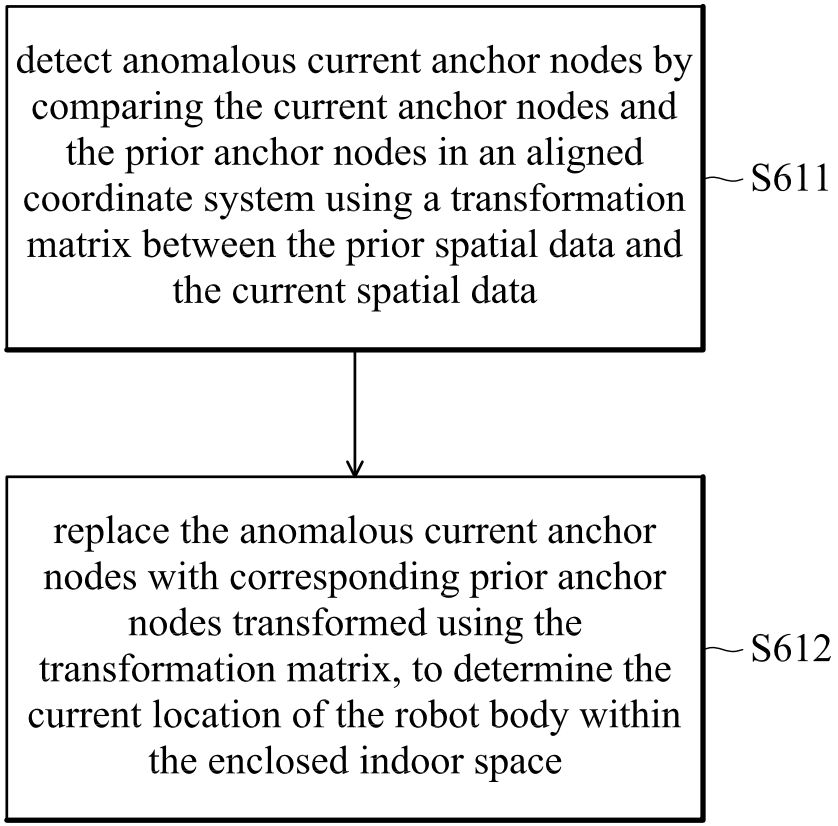

FIG. 6B