12/04/02
2002021160

(12) INTERNATIONAL APPLICATION PUBLISHED UNDER THE PATENT COOPERATION TREATY (PCT)

(19) World Intellectual Property Organization
International Bureau

(43) International Publication Date
17 May 2001 (17.05.2001)

PCT

(10) International Publication Number
WO 01/35384 A1

(51) International Patent Classification[7]: G09G 3/36

(21) International Application Number: PCT/US00/25714

(22) International Filing Date:
19 September 2000 (19.09.2000)

(25) Filing Language: English

(26) Publication Language: English

(30) Priority Data:
09/436,064 8 November 1999 (08.11.1999) US

(71) Applicant: ATMEL CORPORATION [US/US]; 2325 Orchard Parkway, San Jose, CA 95131 (US).

(72) Inventors: PATHAK, Saroj; 12998 Robleda Road, Los Altos Hills, CA 94022 (US). PAYNE, James, E.; 214 Crows Nest Drive, Boulder Creek, CA 95005 (US).

(74) Agent: SCHNECK, Thomas; Law Offices of Thomas Schneck, P.O. Box 2-E, San Jose, CA 95109-0005 (US).

(81) Designated States *(national)*: CA, CN, JP, KR, NO, SG.

(84) Designated States *(regional)*: European patent (AT, BE, CH, CY, DE, DK, ES, FI, FR, GB, GR, IE, IT, LU, MC, NL, PT, SE).

Published:
— *With international search report.*

For two-letter codes and other abbreviations, refer to the "Guidance Notes on Codes and Abbreviations" appearing at the beginning of each regular issue of the PCT Gazette.

(54) Title: DRIVE CIRCUIT FOR LIQUID CRYSTAL DISPLAY CELL

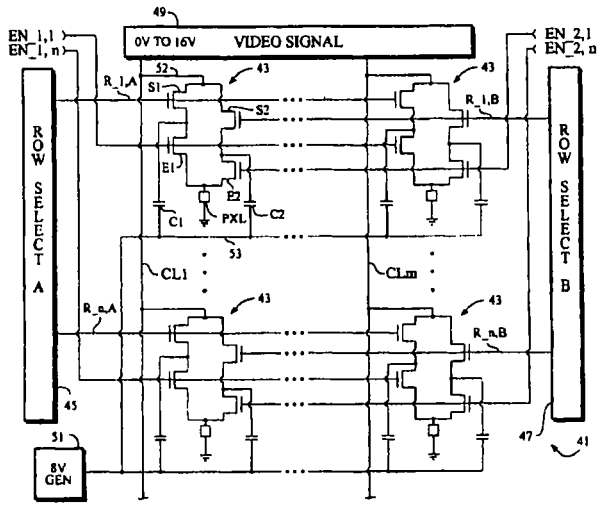


162162


ACTION

(57) Abstract: A driver circuit for use in an array (41) of picture elements (43) in a liquid crystal display is capable of displaying one set of image data while receiving a second set of image data. A first select switch transistor (S1) responsive to a first select signal (R_1,A) controls the coupling of a first image to a first storage capacitor (C1). A second select switch transistor (S2) responsive to a second select signal (R_1,B) controls the coupling of a second image to a second storage capacitor (C2). The first storage capacitor (C1) may be selectively coupled to an output node (PXL) by means of a first enable switch transistor (E1) responsive to a first enable signal (EN_1,1). The second storage capacitor (C2) may be selectively coupled to the same output node (PXL) by means of a second enable switch transistor (E2) responsive to a second enable signal (EN_2,1). By proper manipulation of the switch transistors, one storage capacitor may be coupled to the output node while the other storage capacitor is isolated from the output node and receiving new image data.

WO 01/35384 A1