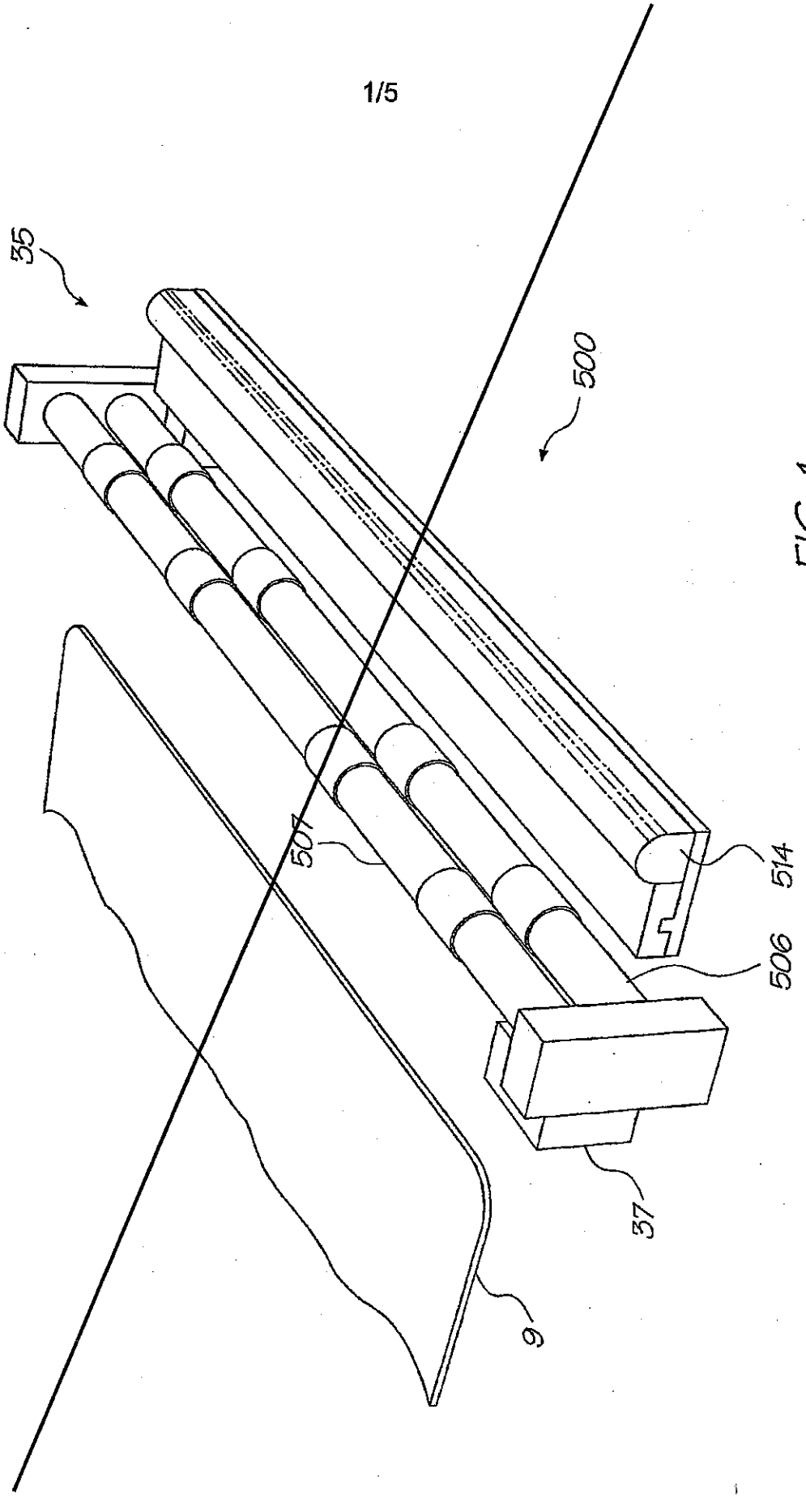

FIG. 1

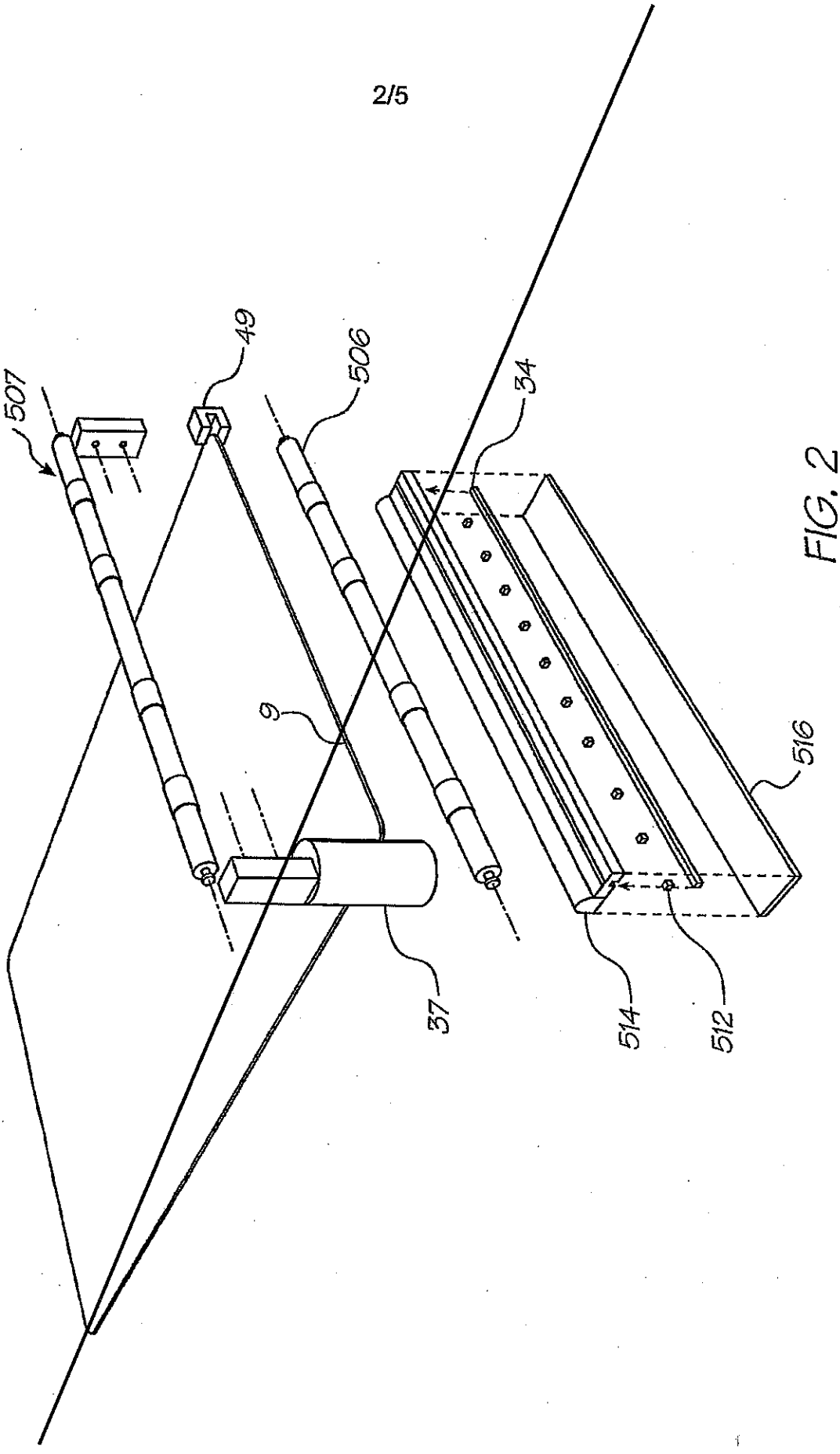

FIG. 2

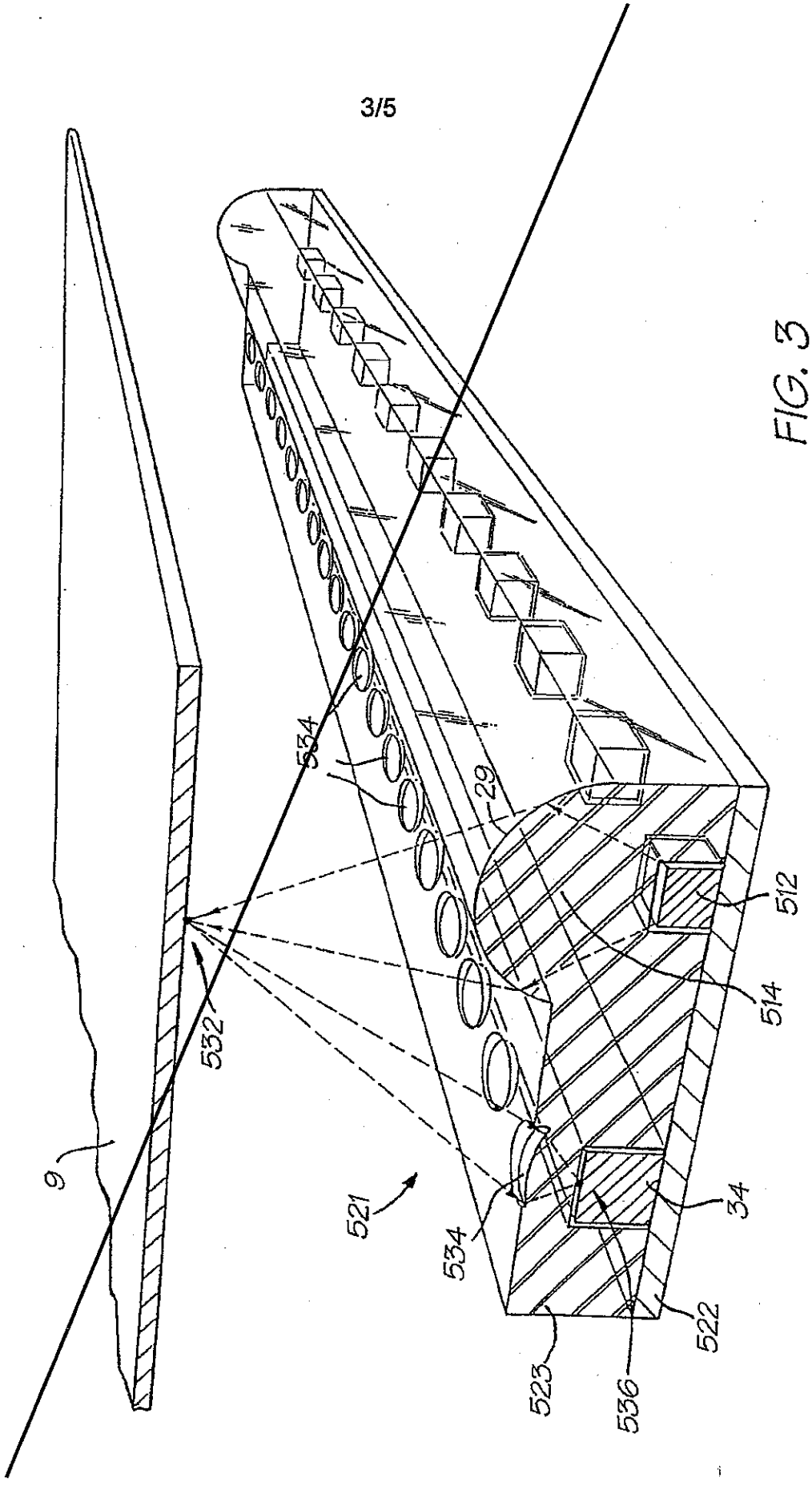

FIG. 3

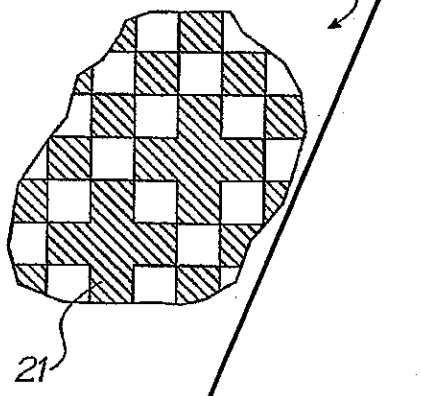
25
21

FIG. 4

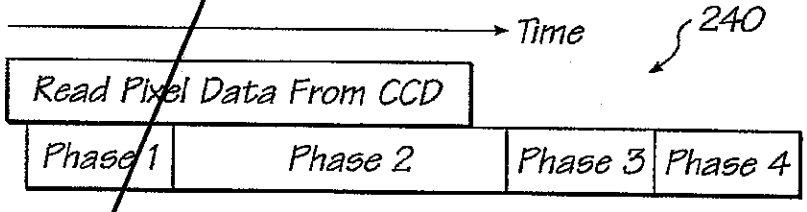
Time
240
Read Pixel Data From CCD
Phase 1
Phase 2
Phase 3
Phase 4

FIG. 5

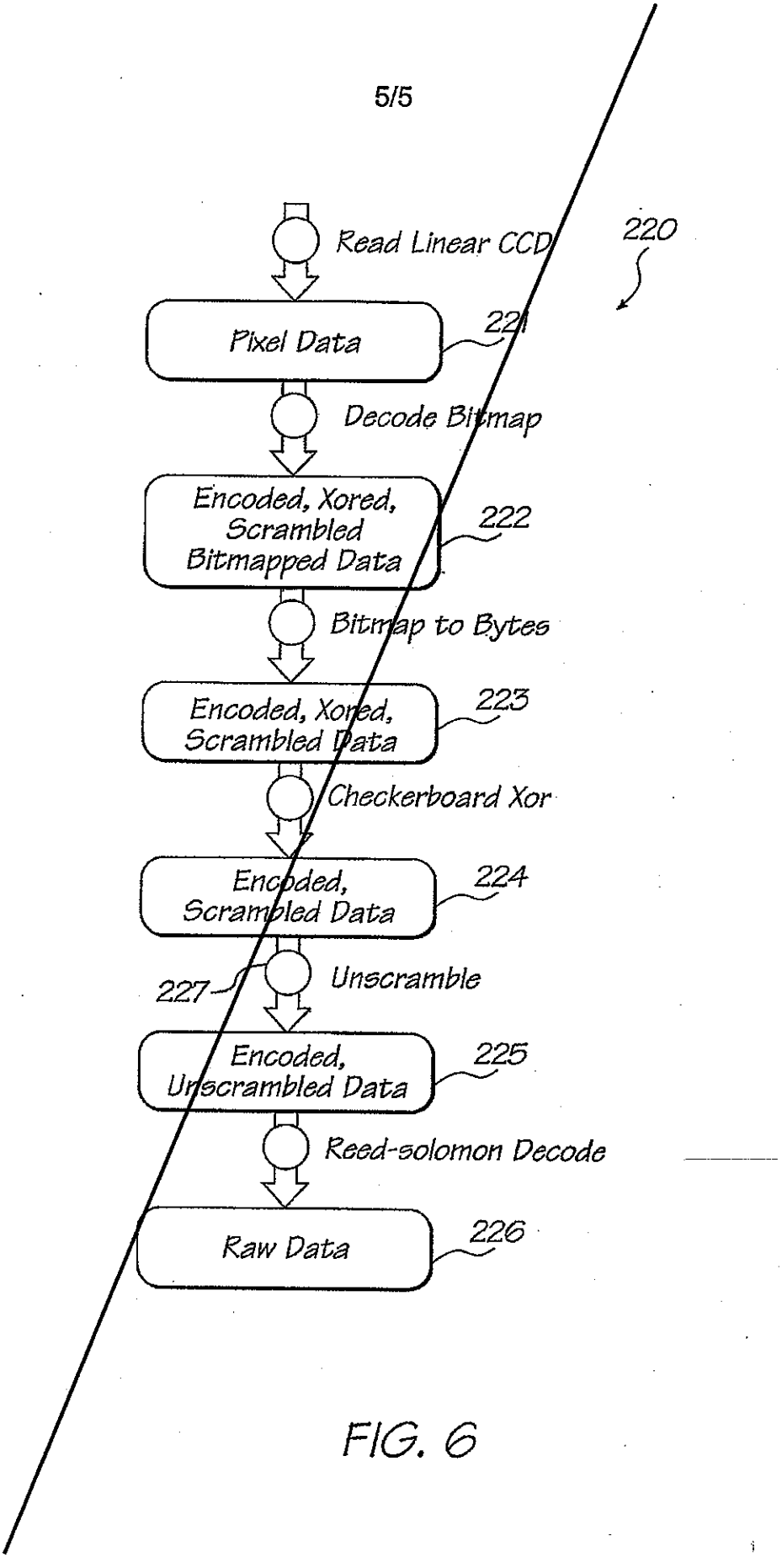
Read Linear CCD
220
Pixel Data
221
Decode Bitmap
Encoded, Xored, Scrambled Bitmapped Data
222
Bitmap to Bytes
Encoded, Xored, Scrambled Data
223
Checkerboard Xor
Encoded, Scrambled Data
224
227
Unscramble
Encoded, Unscrambled Data
225
Reed-solomon Decode
Raw Data
226

FIG. 6

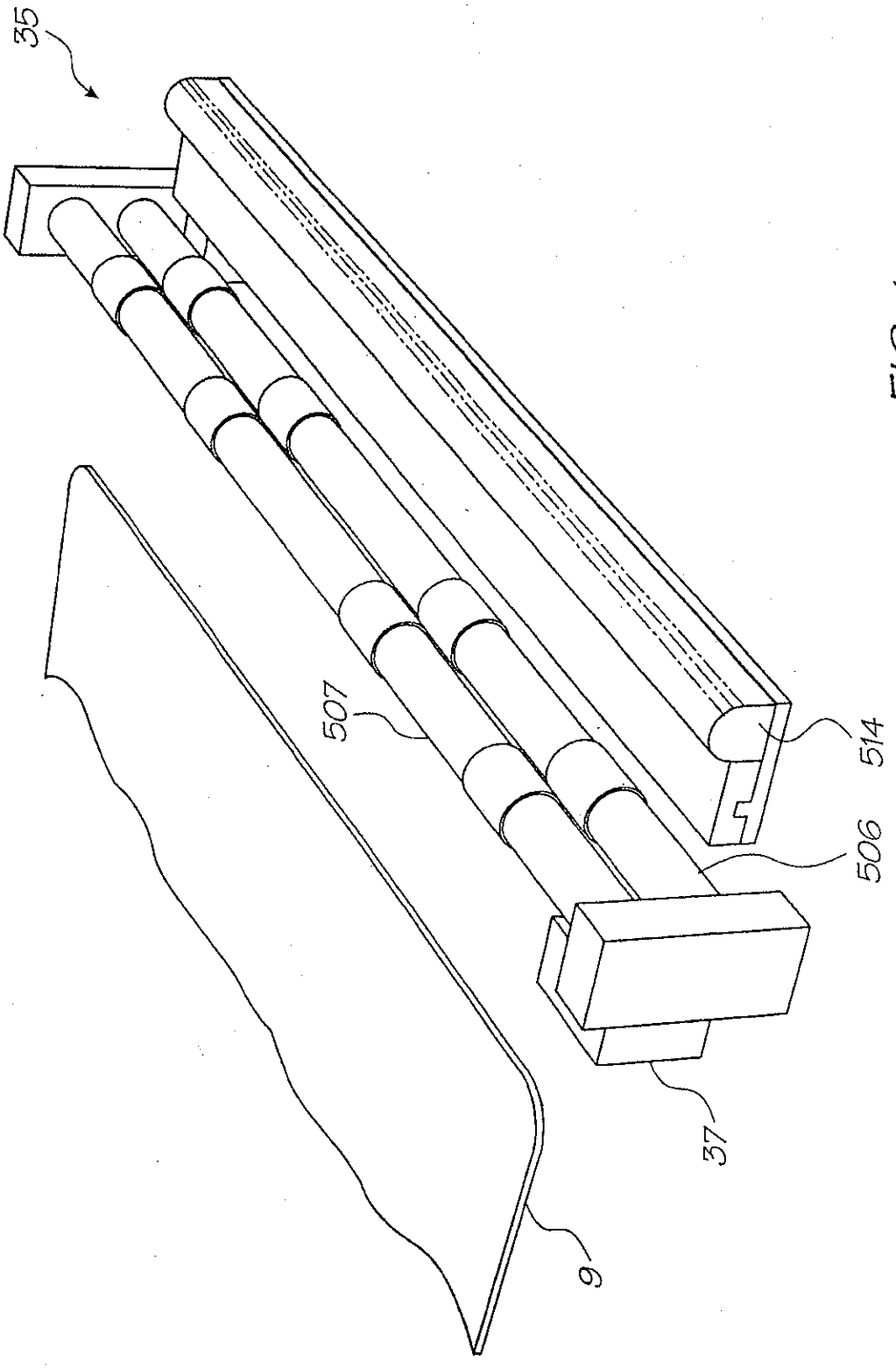

FIG. 1

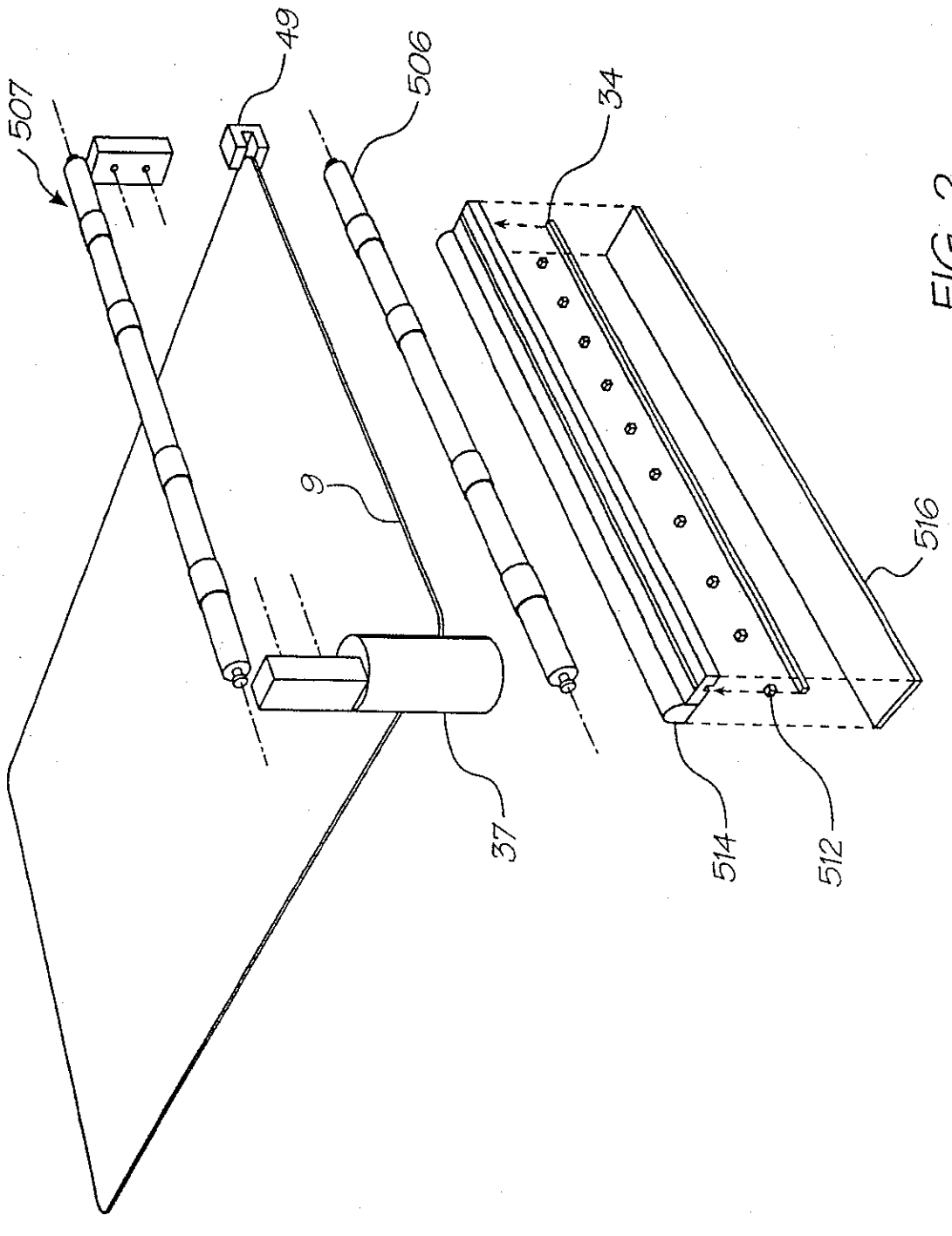

FIG. 2

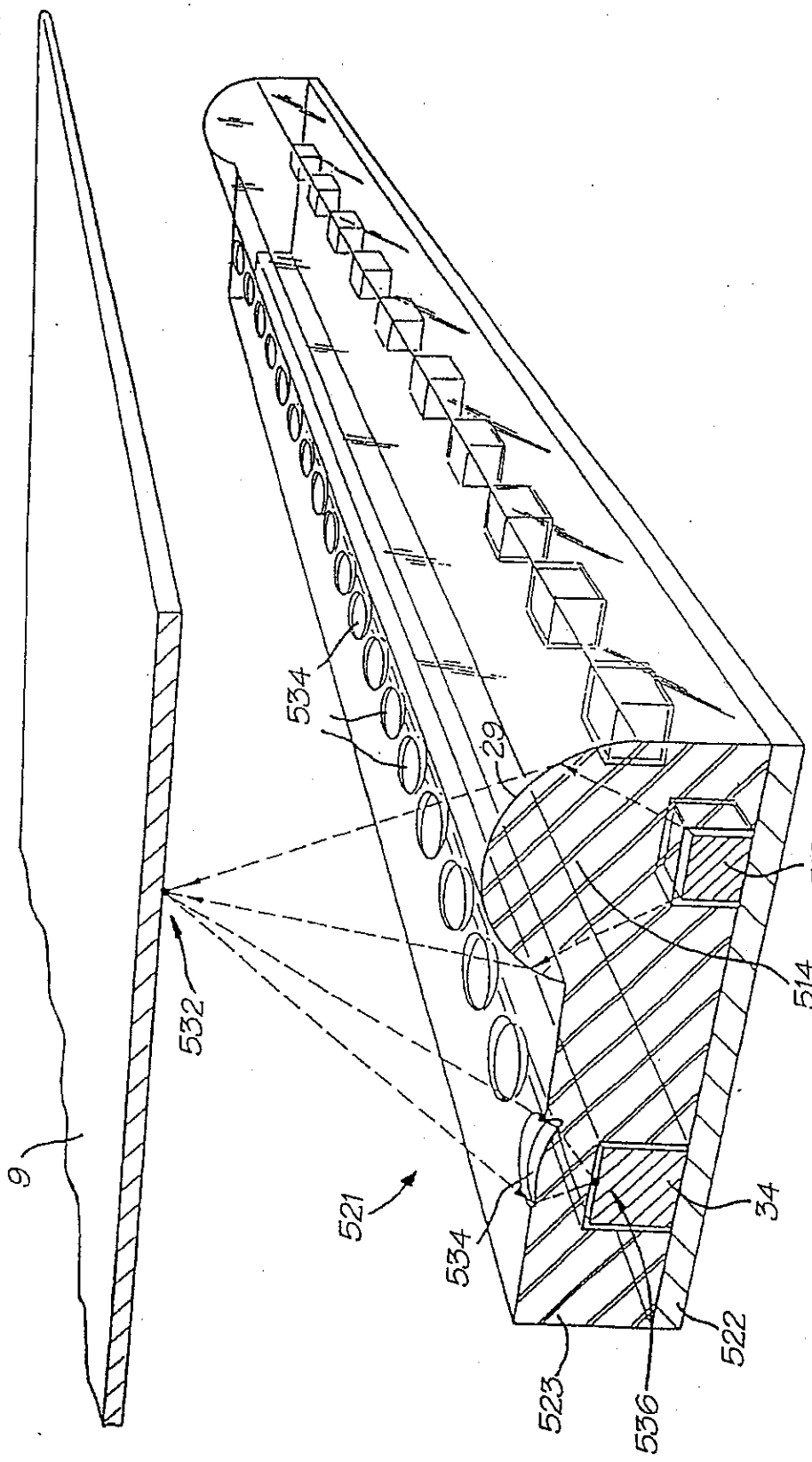

FIG. 3

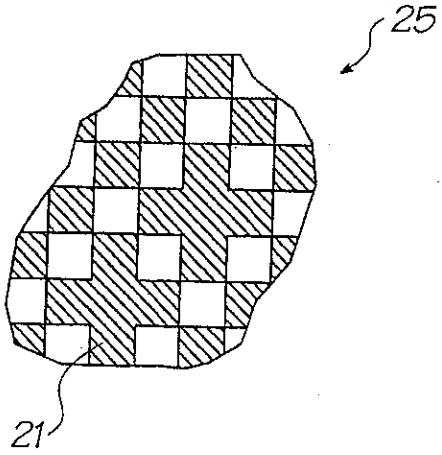
25
21

FIG. 4

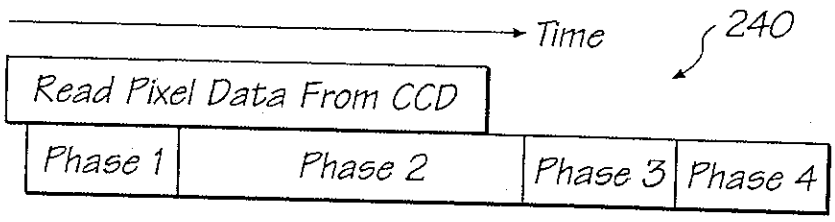
Time
240
Read Pixel Data From CCD
Phase 1
Phase 2
Phase 3
Phase 4

FIG. 5

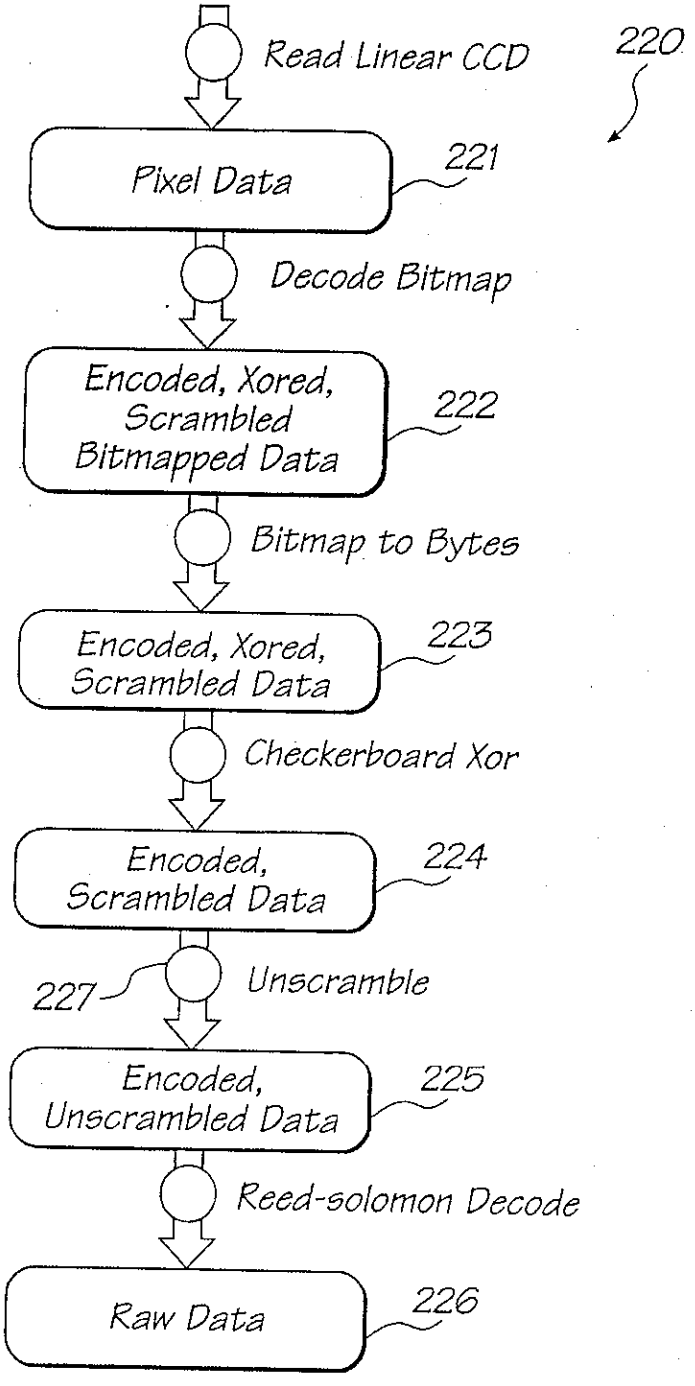
Read Linear CCD
220
Pixel Data
221
Decode Bitmap
Encoded, Xored, Scrambled Bitmapped Data
222
Bitmap to Bytes
Encoded, Xored, Scrambled Data
223
Checkerboard Xor
Encoded, Scrambled Data
224
227
Unscramble
Encoded, Unscrambled Data
225
Reed-solomon Decode
Raw Data
226

FIG. 6