PCT WORLD INTELLECTUAL PROPERTY ORGANIZATION
International Bureau

INTERNATIONAL APPLICATION PUBLISHED UNDER THE PATENT COOPERATION TREATY (PCT)

(51) International Patent Classification 6 :		(11) International Publication Number:	WO 99/34939
B08B 3/02, 9/00	A1	(43) International Publication Date:	15 July 1999 (15.07.99)

(21) International Application Number: PCT/US99/00446

(22) International Filing Date: 8 January 1999 (08.01.99)

(30) Priority Data:
60/072,458 9 January 1998 (09.01.98) US

(71) Applicant: FLUOROWARE, INC. [US/US]; 102 Jonathan Boulevard North, Chaska, MN 55318 (US).

(72) Inventor: HALBMAIER, David, L.; 26395 Shorewood Oaks Drive, Shorewood, MN 55331 (US).

(74) Agents: CHRISTENSEN, Douglas, J. et al.; Palmatier, Sjoquist, Voigt & Christensen, P.A., Suite 5005, 333 Washington Avenue North, Minneapolis, MN 55401 (US).

(81) Designated States: CN, DE, GB, JP, KR, SG, European patent (AT, BE, CH, CY, DE, DK, ES, FI, FR, GB, GR, IE, IT, LU, MC, NL, PT, SE).

Published
With international search report.
Before the expiration of the time limit for amending the claims and to be republished in the event of the receipt of amendments.

(54) Title: CONTAINER WASHING APPARATUS

(57) Abstract

A wafer carrier (10) cleaner which comprises a base (24) having a first aperture (16) and a second aperture (26). The wafer cleaner (10) includes a first sprayer (30), and a second sprayer (50), with the first sprayer (30) configured to direct a series of cleaning fluids about the exterior surface of a wafer carrier (C), and the second sprayer (50) configured to direct a series of cleaning fluids about the interior surface of a wafer carrier (C). The expended fluids used to clean the exterior surface of the wafer carrier (C) are directed through the first aperture (16) and into a first fluidic circuit, and the expended fluids used to clean the interior surface of the wafer carrier (C) are directed through the second aperture (26) and into a second fluidic circuit. The provision of dedicated fluidic circuits for the exterior and interior cleaning fluids reduces cross contamination.

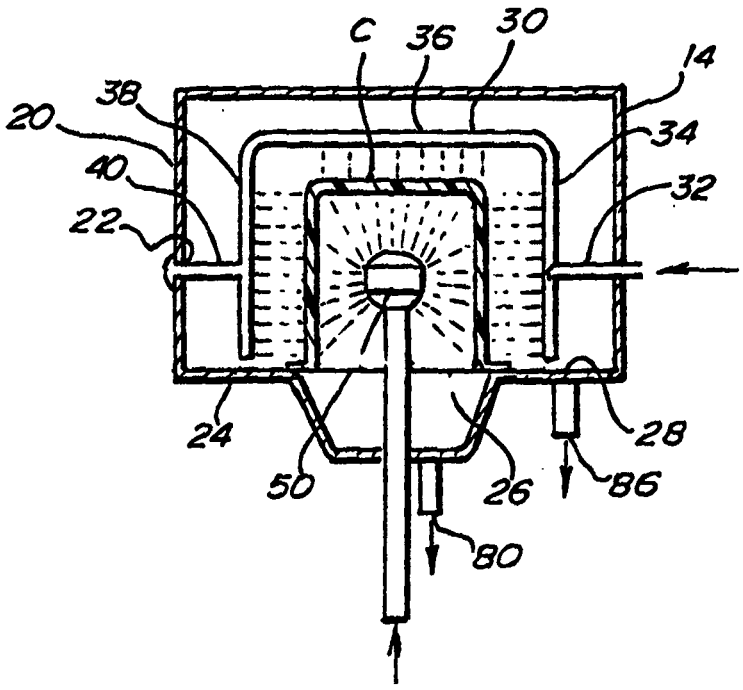

FOR THE PURPOSES OF INFORMATION ONLY

Codes used to identify States party to the PCT on the front pages of pamphlets publishing international applications under the PCT.

AL	Albania	**ES**	Spain	**LS**	Lesotho	**SI**	Slovenia
AM	Armenia	**FI**	Finland	**LT**	Lithuania	**SK**	Slovakia
AT	Austria	**FR**	France	**LU**	Luxembourg	**SN**	Senegal
AU	Australia	**GA**	Gabon	**LV**	Latvia	**SZ**	Swaziland
AZ	Azerbaijan	**GB**	United Kingdom	**MC**	Monaco	**TD**	Chad
BA	Bosnia and Herzegovina	**GE**	Georgia	**MD**	Republic of Moldova	**TG**	Togo
BB	Barbados	**GH**	Ghana	**MG**	Madagascar	**TJ**	Tajikistan
BE	Belgium	**GN**	Guinea	**MK**	The former Yugoslav Republic of Macedonia	**TM**	Turkmenistan
BF	Burkina Faso	**GR**	Greece			**TR**	Turkey
BG	Bulgaria	**HU**	Hungary	**ML**	Mali	**TT**	Trinidad and Tobago
BJ	Benin	**IE**	Ireland	**MN**	Mongolia	**UA**	Ukraine
BR	Brazil	**IL**	Israel	**MR**	Mauritania	**UG**	Uganda
BY	Belarus	**IS**	Iceland	**MW**	Malawi	**US**	United States of America
CA	Canada	**IT**	Italy	**MX**	Mexico	**UZ**	Uzbekistan
CF	Central African Republic	**JP**	Japan	**NE**	Niger	**VN**	Viet Nam
CG	Congo	**KE**	Kenya	**NL**	Netherlands	**YU**	Yugoslavia
CH	Switzerland	**KG**	Kyrgyzstan	**NO**	Norway	**ZW**	Zimbabwe
CI	Côte d'Ivoire	**KP**	Democratic People's Republic of Korea	**NZ**	New Zealand		
CM	Cameroon			**PL**	Poland		
CN	China	**KR**	Republic of Korea	**PT**	Portugal		
CU	Cuba	**KZ**	Kazakstan	**RO**	Romania		
CZ	Czech Republic	**LC**	Saint Lucia	**RU**	Russian Federation		
DE	Germany	**LI**	Liechtenstein	**SD**	Sudan		
DK	Denmark	**LK**	Sri Lanka	**SE**	Sweden		
EE	Estonia	**LR**	Liberia	**SG**	Singapore		