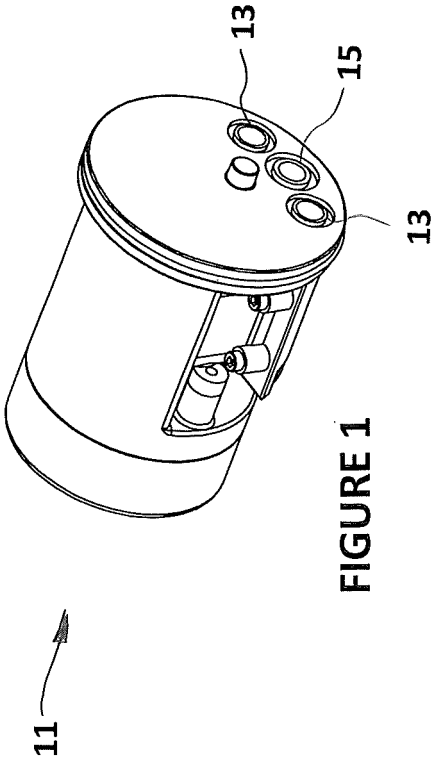


FIGURE 1




FIGURE 2

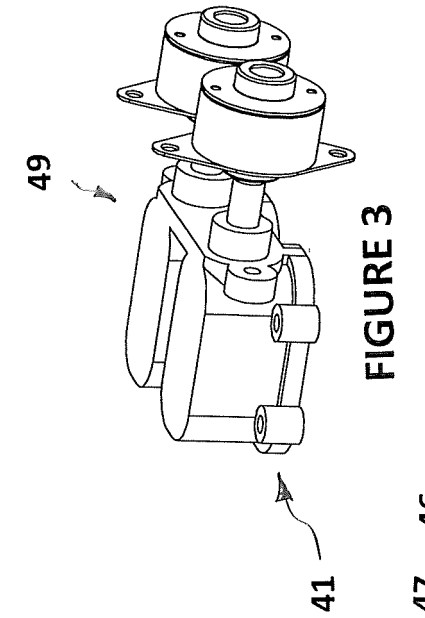


FIGURE 3

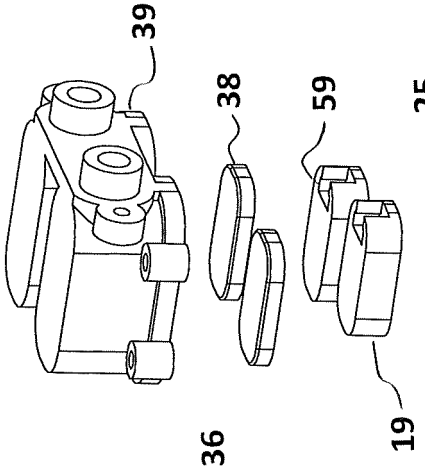


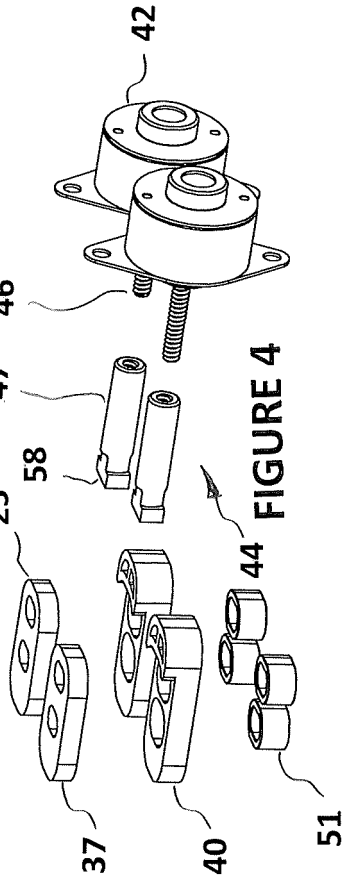


FIGURE 4

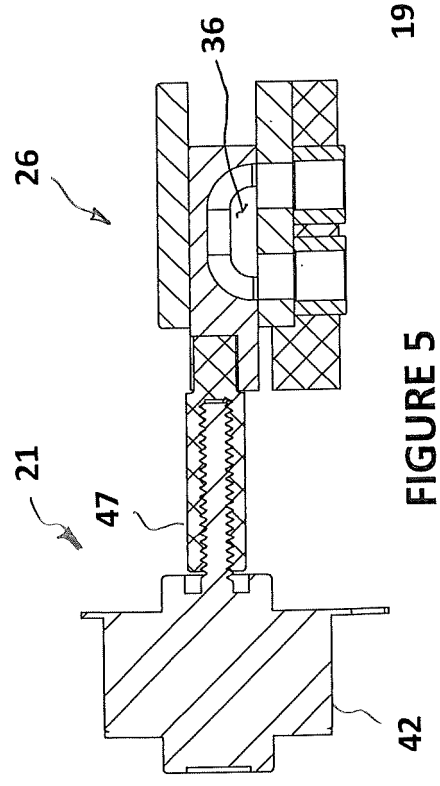


FIGURE 5

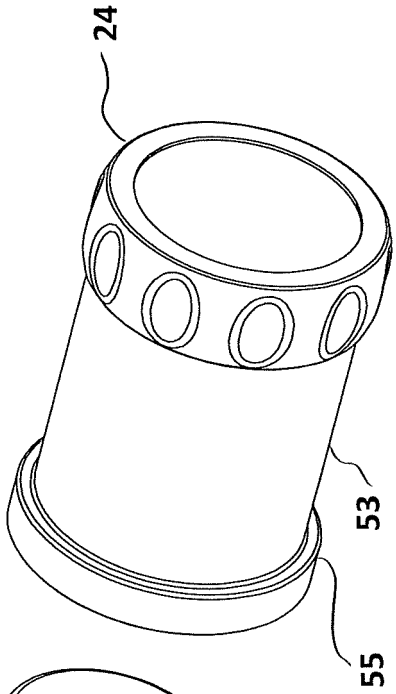


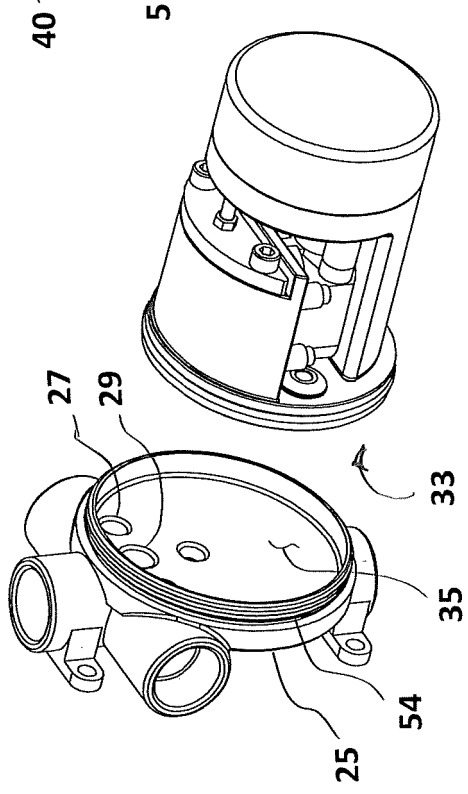


FIGURE 6

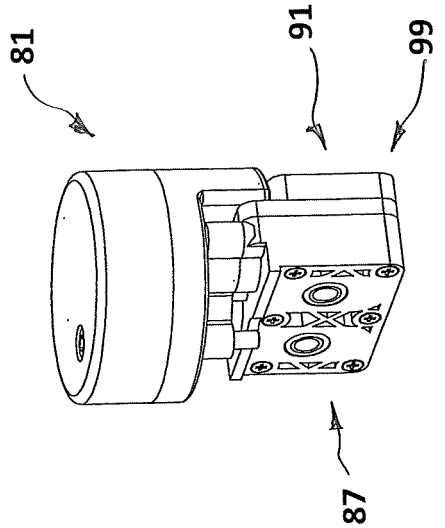


FIGURE 7

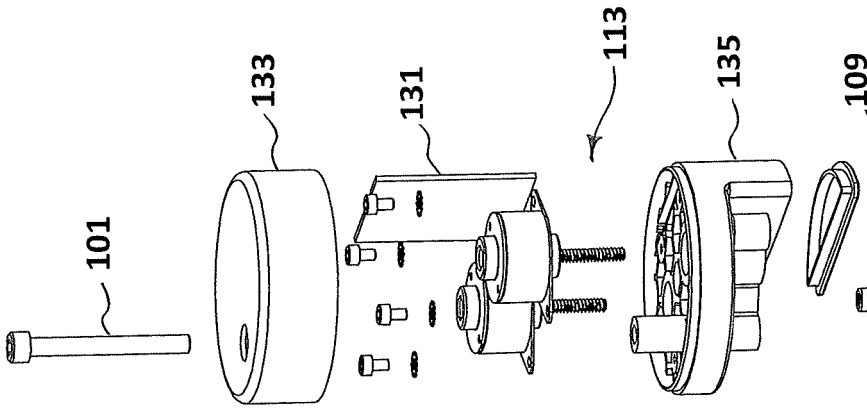


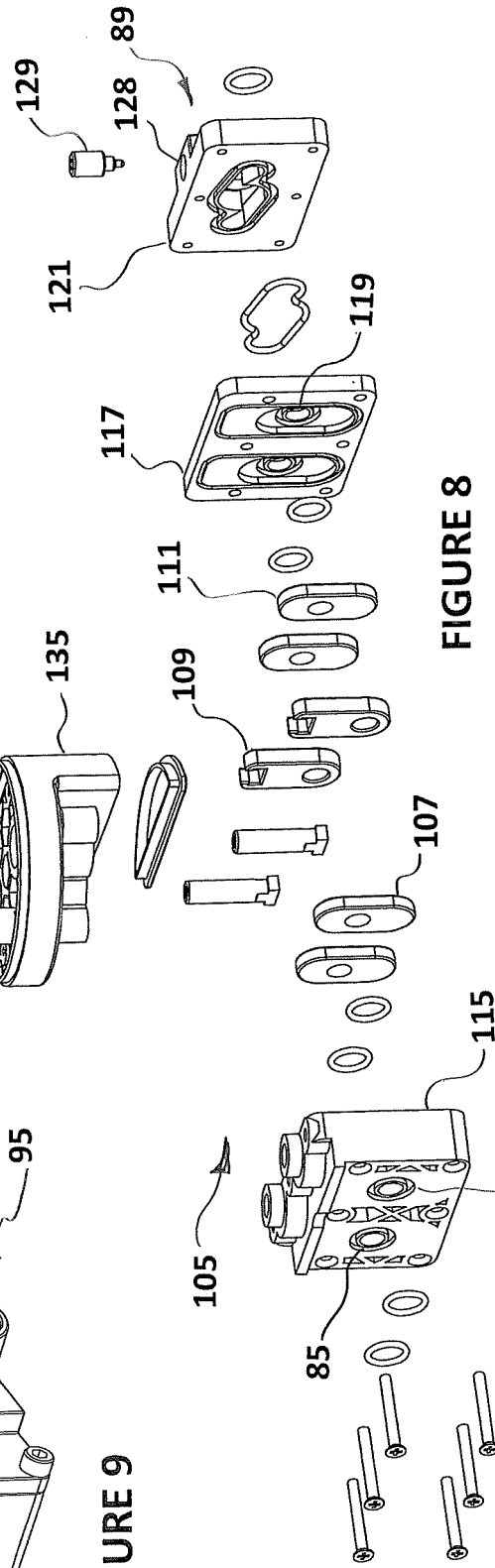


FIGURE 8

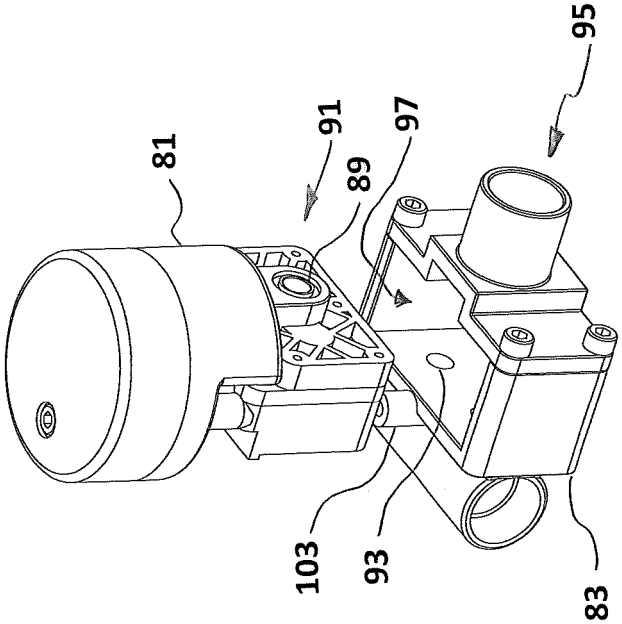


FIGURE 9

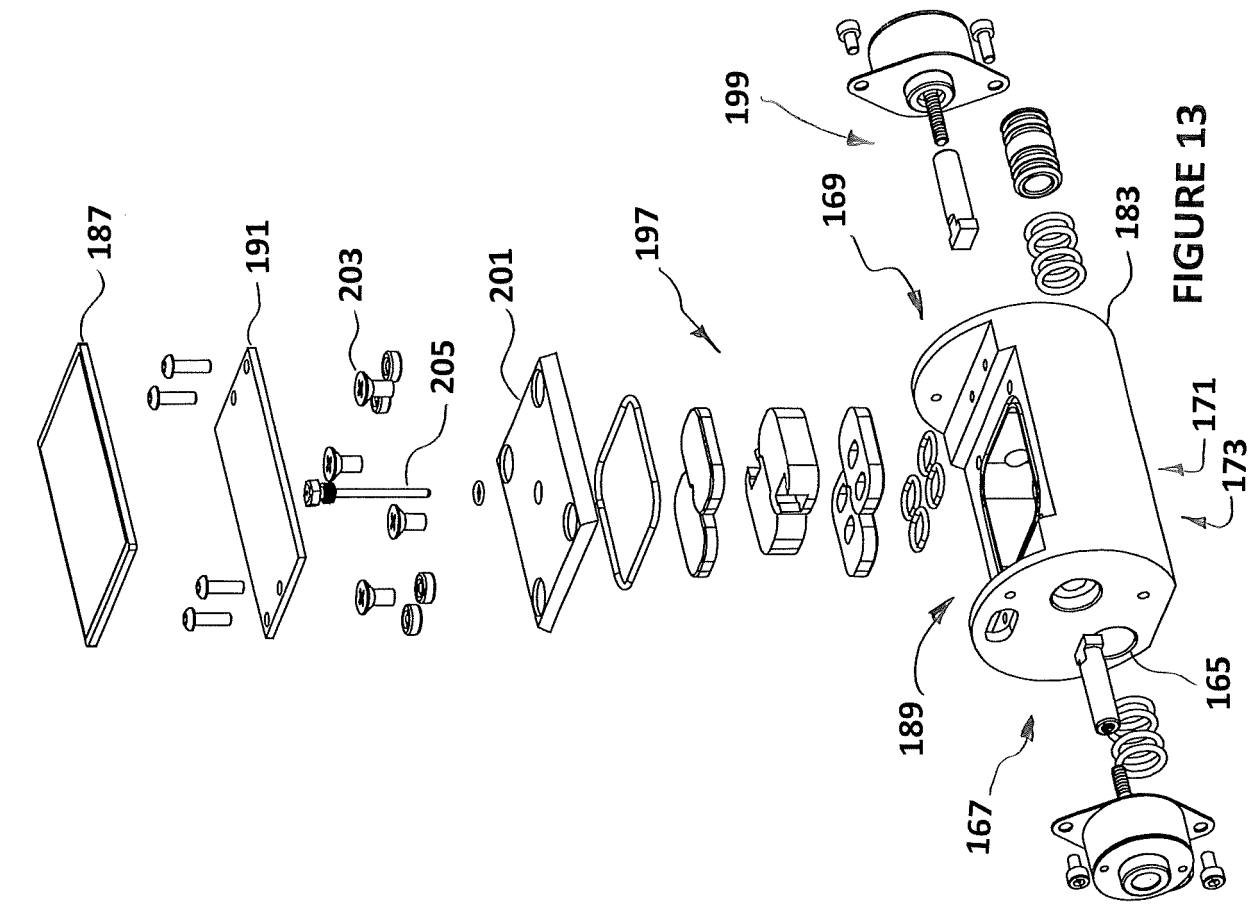


FIGURE 13

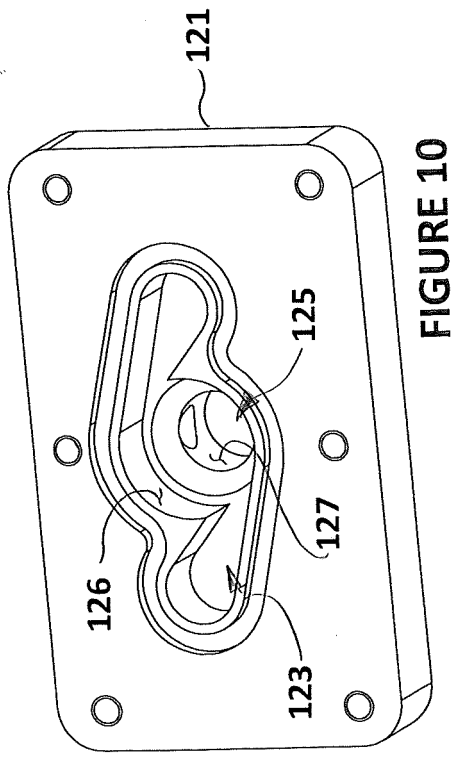


FIGURE 10

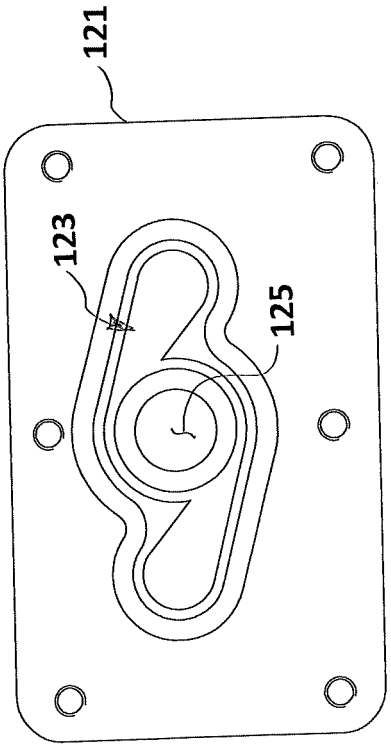


FIGURE 11

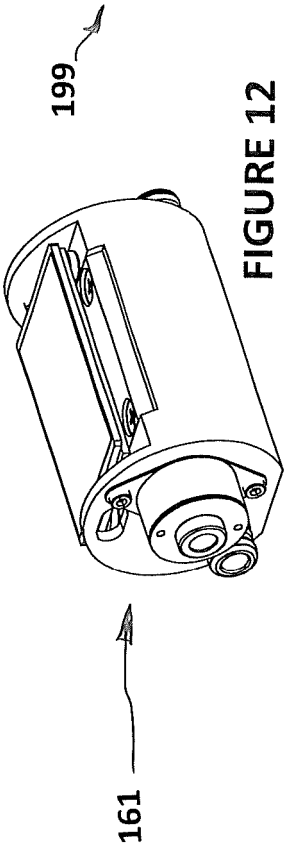


FIGURE 12

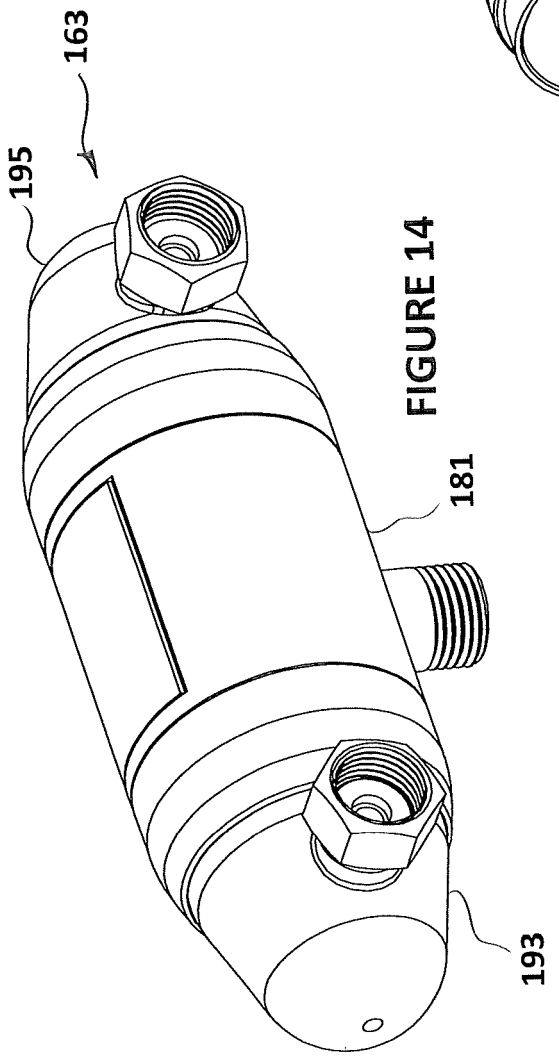


FIGURE 14

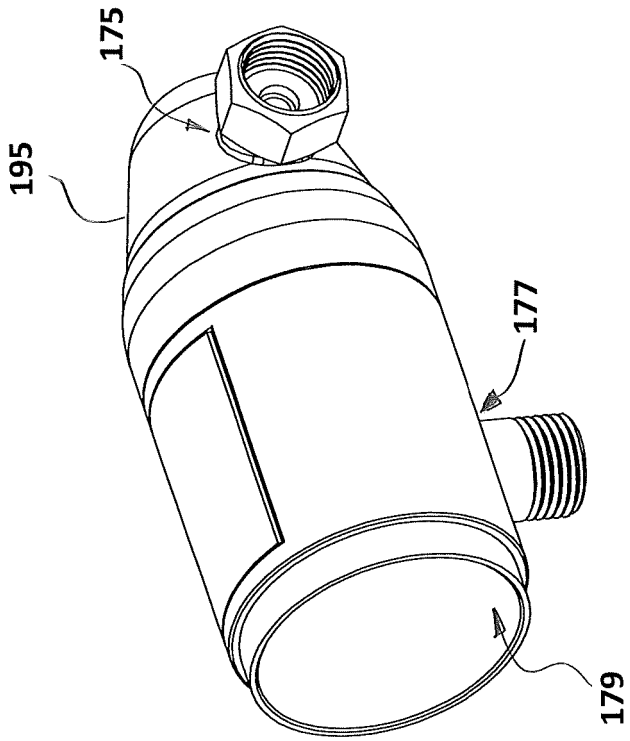


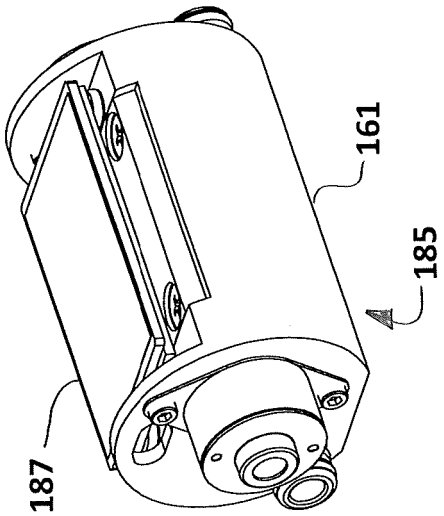


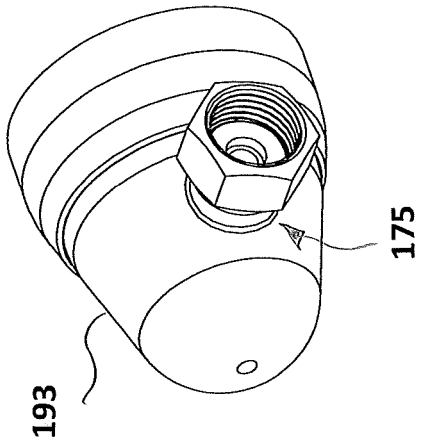


FIGURE 15

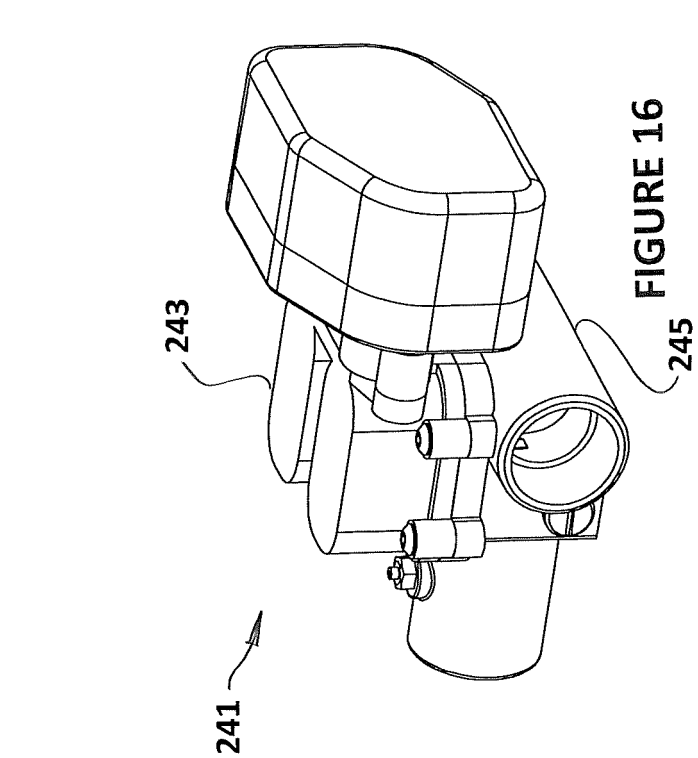


FIGURE 16




FIGURE 17

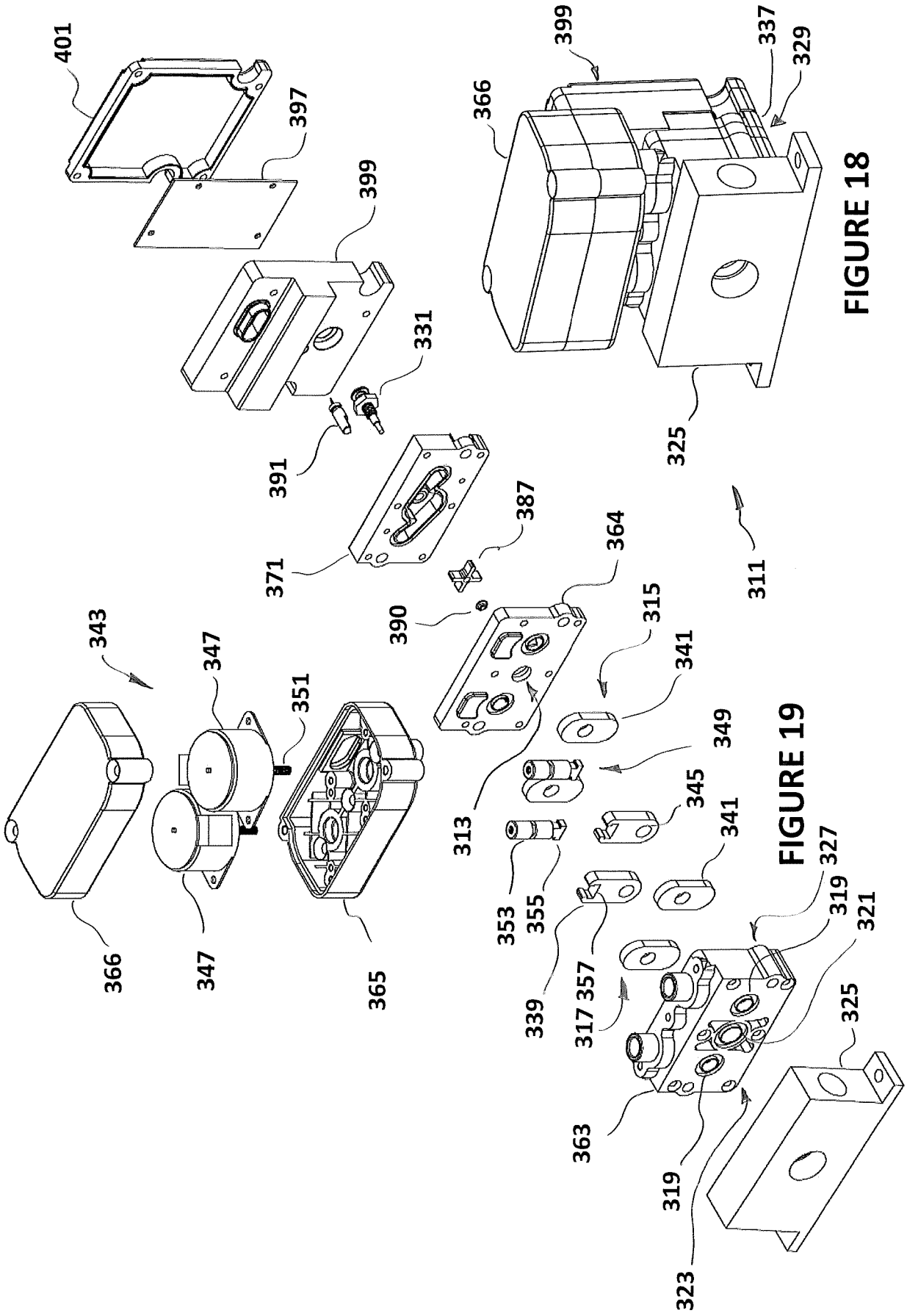


FIGURE 18

FIGURE 19

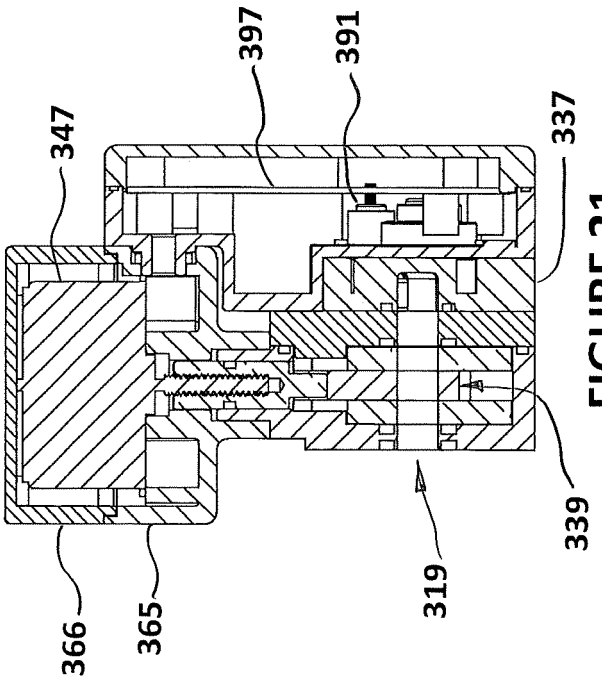


FIGURE 21

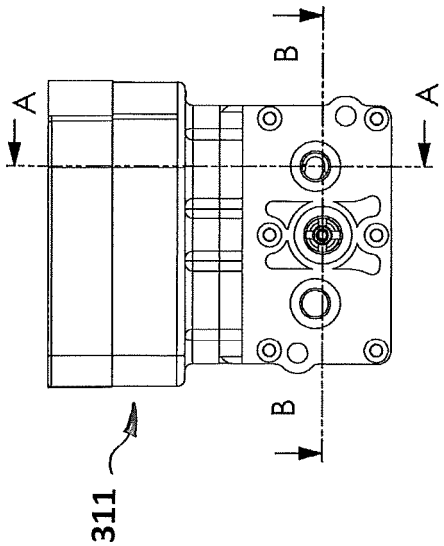


FIGURE 20

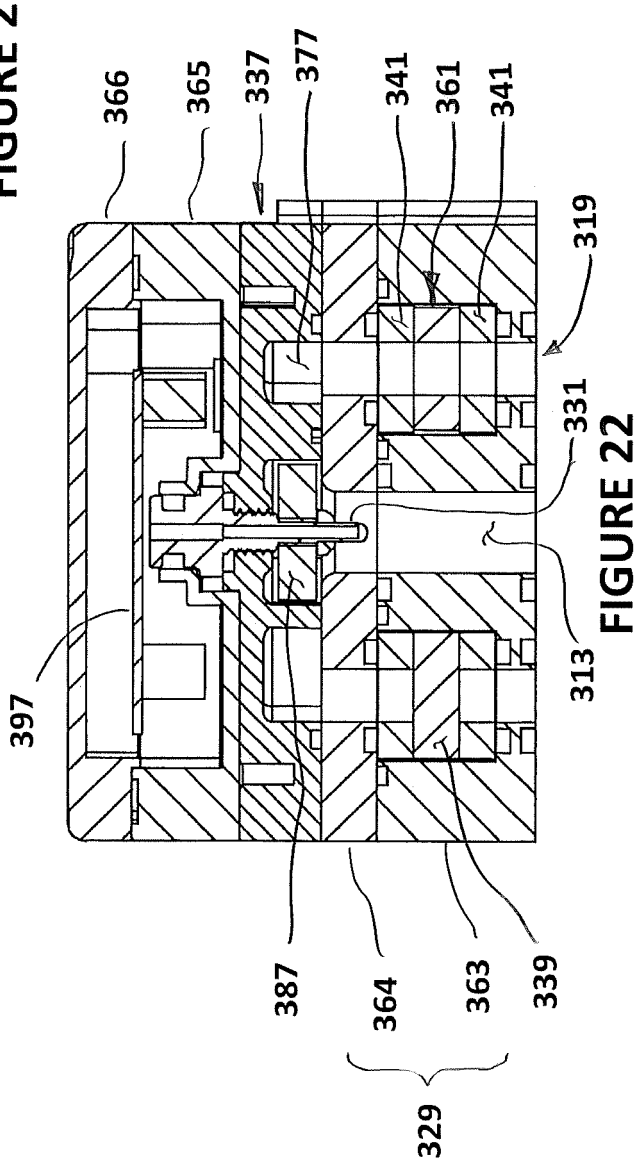


FIGURE 22

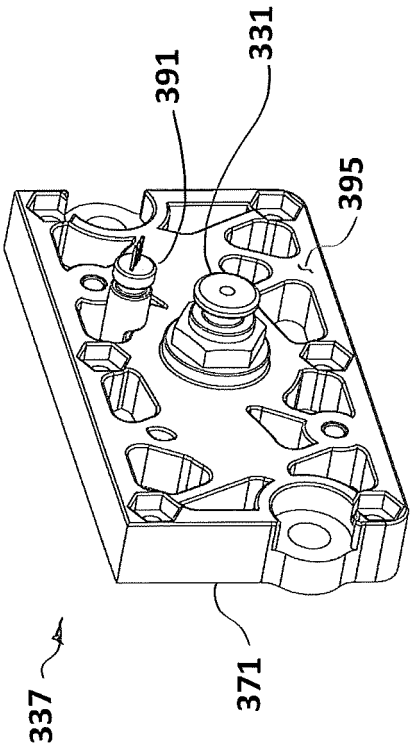


FIGURE 24

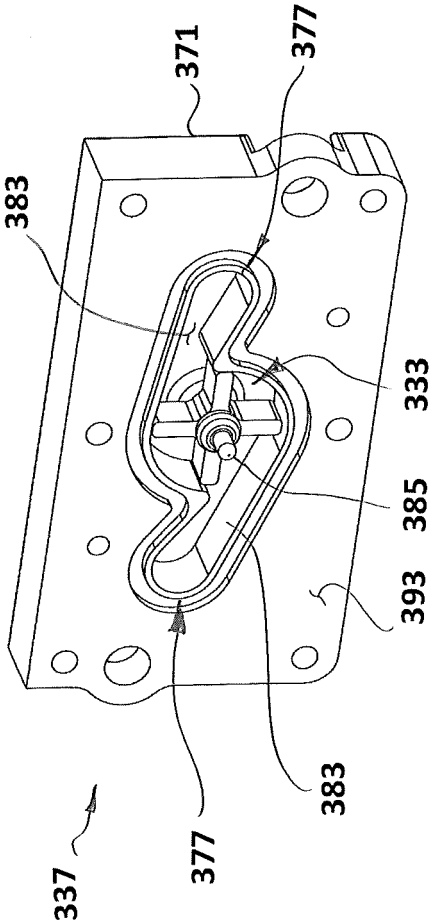


FIGURE 23

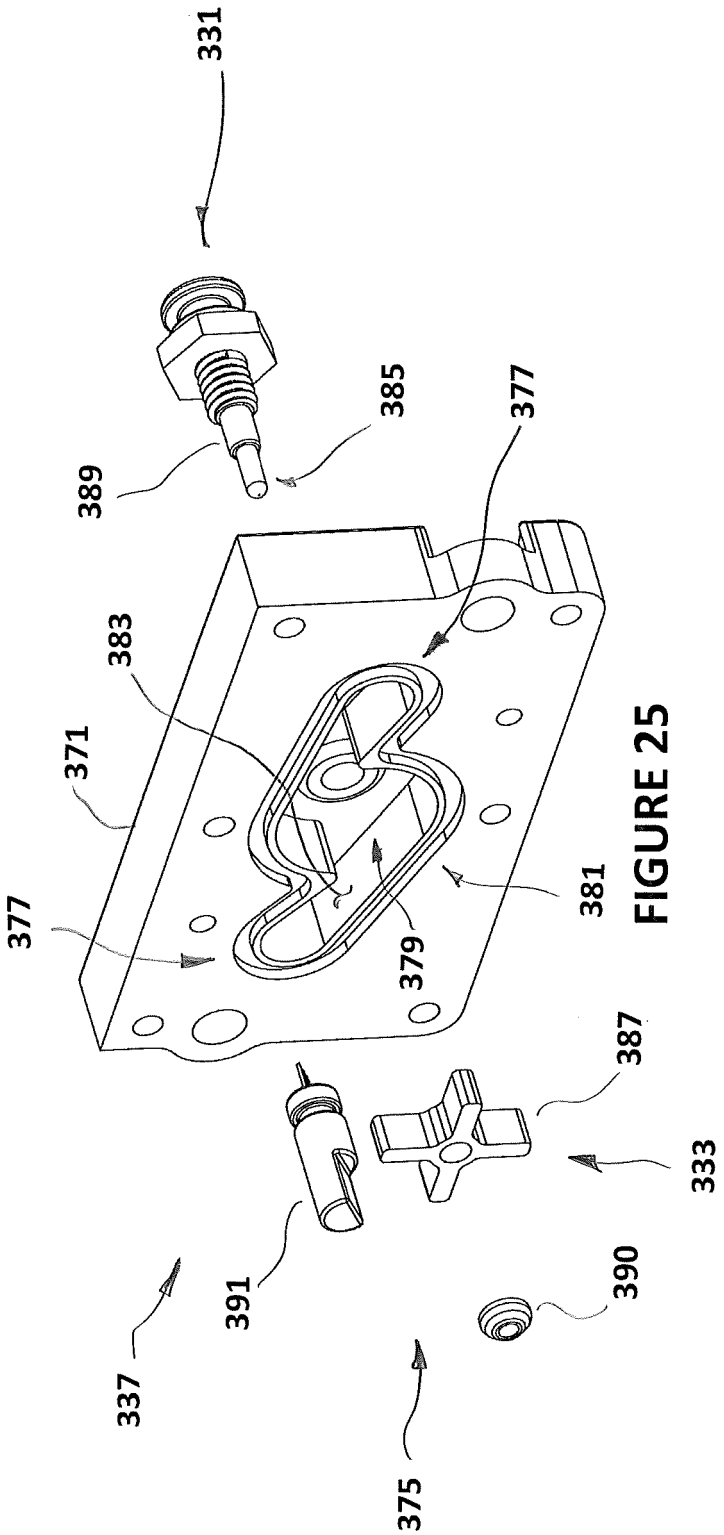


FIGURE 25

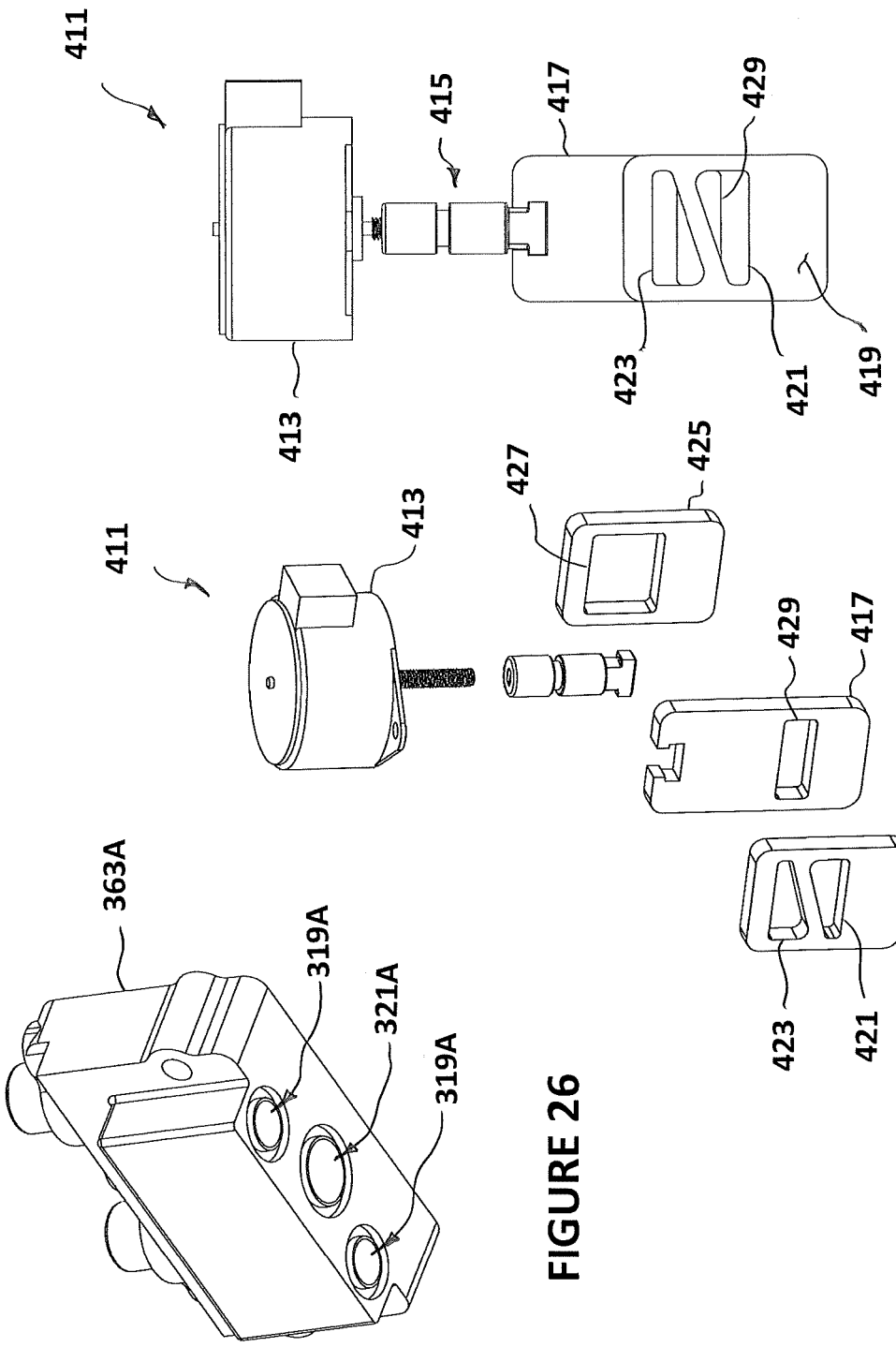


FIGURE 26




FIGURE 27




FIGURE 28