TITLE OF THE INVENTION

CAP FOR WRITING TOOL

BACKGROUND OF THE INVENTION

The present invention relates to a cap to be fitted onto a pen point side of a writing tool such as a ball-point pen or a signing pen. Particularly, the invention is concerned with an improvement of a cap to be fitted onto a writing tool provided with an elastic member, or a so-called non-slip means, of a different material from the material of the cap or a cylindrical shell, the non-slip means being mounted on the grip portion of the cylindrical shell, to improve both non-slip characteristic and grasping feel during use of the writing tool.

Recently there has been proposed a writing tool having a non-slip means mounted on an outer portion (grip portion) of a cylindrical shell on a pen point side where a cap of the writing tool is to be fitted, to permit the user of the writing tool to grasp the cylindrical shell firmly without fatigue even in use over a long time.

However, for attaining the non-slip purpose in use, the non-slip means is mainly formed of an elastic

material such as rubber which is relatively soft and exhibits a slip preventing effect, while the cap, like the cylindrical shell, is formed of a hard resin. Further, the inner surface (inside diameter) of the cap is formed in a shape conforming to the outer surface shape (outside diameter) of the grip portion of the cylindrical shell on which the cap is to be fitted, without permitting a large play relative to the outside of the cylindrical shell grip portion and so that the cap can be mounted and removed relative to the front-end grip portion including the pen point. Consequently, at the time of mounting or pulling off the cap the cap contacts the non-slip means over a large surface and the force of contact thereof with the elastic member becomes large to the extent that the mounting and removal of the cap can no longer be effected smoothly. Since the mounting and removal of the cap are performed forcibly, the non-slip means is damaged in a short period and hence its slip preventing effect is deteriorated.

The present invention has been accomplished in view of such conventional circumstances and it is the object of the invention to provide a cap for a writing tool provided with a non-slip means which cap can reduce

the force of contact with the outside of a cylindrical shell having an elastic member and can thereby effect smooth mounting and removal of the cap.

SUMMARY OF THE INVENTION

According to the gist of technical means adopted by the present invention for achieving the above-mentioned object there is provided a cap for a writing tool having on the outside of a cylindrical shell an elastic member of a different material from the material of the cap, the cap having a plurality of longitudinal ribs formed on the inner peripheral surface of the cap and which ribs extend along the cylindrical shell. End portions of the said longitudinal ribs on the opening edge side of the cap may each be cut in the form of an arch.

According to the above technical means adopted by the present invention, since longitudinal ribs are formed in the inner peripheral surface of the cap, the cap is fitted on the cylindrical shell in the state of linear contact in the direction of insertion with respect to the elastic member provided on the outside of the cylindrical shell, whereby the contact force is greatly reduced.

BRIEF DESCRIPTION OF THE DRAWINGS

Fig. 1 is a front view in longitudinal section, showing a cap as fitted on a cylindrical shell.

Figs. 2(a) and 2(b) are cross-sectional views taken on line II-II in Fig.1.

Fig. 3 is an enlarged, partial, sectional view.

PREFERRED EMBODIMENT OF THE IVENTION

An embodiment of the present invention will now be described with reference to the drawings. Fig.1 illustrates a ball-point pen as an example of writing tool. In the same figure, the numeral 1 denotes a cylindrical shell, numeral 2 denotes a cap which is fitted removably on a pen point 1a side of the cylindrical shell 1, and numeral 3 denotes a spare ink tube loaded into the cylindrical shell 1. In the inner peripheral surface of the cap 2 are formed a plurality of longitudinal ribs 4 extending along the cylindrical shell to minimize the force of contact with an elastic member 5 which is mounted on the pen point 1a side of the cylindrical shell 1.

The cylindrical shell 1 and the cap 2 are

integrally molded products obtained, for example, by blow molding or injection molding. The cylindrical shell 1 comprises a cylindrical front portion 1-1 which serves as a grip portion during use of the ball-point pen and a cylindrical rear portion 1-2 which is removably connected threadedly with the rear end of the Front portion 1-1. The outside of the cylindrical front portion 1-1 is formed with a recess 6 for mounting of the elastic member in such a manner that the elastic member cannot move along the cylindrical shell. On the outside of the cylindrical shell 1 is formed a ring-like projection 9 in a position between the recess 6 and the pen point 1 so as to attain close engagement with a ring-like projection 8 formed on the inner peripheral surface of the cap 2 as will be described later.

On the other hand, the cap 2 has a cap portion 2-1 and a clip 2-2 formed integrally outside the cap portion, the cap portion 2-1 being formed by molding in a length capable of covering the whole of the cylindrical front portion 1-1 including the pen point 1a and so as to have an inner surface shape of a size larger (an inside diameter not causing contact with the elastic member 5) than the normal size. On the inner

peripheral surface of the cap portion 2-1 are formed longitudinal ribs 4 extending along the cylindrical shell, namely, in the direction of insertion and removal of the cap 2, from the portion near the opening edge of the cap. Further, on the inner end side of the longitudinal ribs 4, a ring-like projection 8 is formed on the inner peripheral surface of the cap portion.

The longitudinal ribs 4 function to reduce the area of contact of the cap portion 2-1 with the elastic member 5 so that the cap portion 2-1 of the cap 2 can be smoothly fitted on and pulled out from the cylindrical front portion 1-1 of the cylindrical shell 1. Those ribs are formed integrally at the time of molding of the cap 2 in several, say, 3 to 6 (6 in the illustrated embodiment), positions in the circumferential direction from near the opening edge of the cap portion 2-1. End portions of the longitudinal ribs 4 located on the opening edge side of the cap portion 2-1 of the cap 2 are each cut largely in the shape of an arch, whereby the end portions are prevented from being caught on the elastic member 5 when the cap is fitted on the cylindrical shell 1 (see Fig.3). As shown in Fig.2(b), a virtual inside diameter r1 connecting the apexes of the longitudinal ribs 4 in the

circumferential direction may be set a size larger than the outside diameter r2 of the elastic member 5 (r1 > r2).

Thus, according to the cap 2 of this embodiment, when the cap is fitted on or pulled out from the cylindrical shell 1, the contact thereof with the elastic member 5 formed of a soft resin, rubber or the like is done as a linear contact in the direction of insertion and removal of the cap through the longitudinal ribs 4 formed on the inner peripheral surface of the cap portion 2-1. Consequently, it is possible to reduce the contact area, that is, reduce the contact force greatly, whereby the mounting and removal of the cap can be done smoothly.

Although in the above embodiment the elastic member 5 is provided on the pen point 1a side outside the cylindrical shell 1, there may be adopted the form of a rudder shaft with the elastic member 5 provided not only on the pen point 1a side but also over the whole of the outside of the cylindrical shell 1.

Since the cap for a writing tool according to the present invention is constructed as above, there can be attained the following functions and effects.

When the cap is fitted on or pulled out from the

cylindrical shell, the contact thereof with the elastic member provided outside the cylindrical shell is done as a linear contact in the direction of insertion and removal of the cap through the longitudinal ribs formed on the inner peripheral surface of the cap portion, whereby the force of contact with the elastic member can be reduced to a great extent.

Thus, according to the cap of the present invention, since it comes into contact with the elastic member provided outside the cylindrical shell in the state of a linear contact extending along the cylindrical shell (in the direction of insertion and removal of the cap), the contact area is greatly reduced and hence the contact force at the time of insertion or removal of the cap is diminished, thereby permitting smooth mounting and removal of the cap and attaining improvement in handlability of the cap. This is very convenient.

Having described specific preferred embodiments of the invention with reference to the accompanying drawings, it will be appreciated that the present invention is not limited to those precise embodiments, and that various changes and modification can be effected therein by one of ordinary skill in the art

without departing from the scope and spirit of the invention as defined by the appended claims.



What Is Claimed Is:

1. A cap for a writing tool having on the outside of a cylindrical shell an elastic member of a different material from the material of the cap, said cap having a plurality of longitudinal ribs formed on the inner peripheral surface of the cap, said longitudinal ribs extending along the cylindrical shell.

2. A cap for a writing tool according to Claim 1, wherein end portions of said plural longitudinal ribs on the opening edge side of the cap are each cut in the form of an arch.

FIG. 1

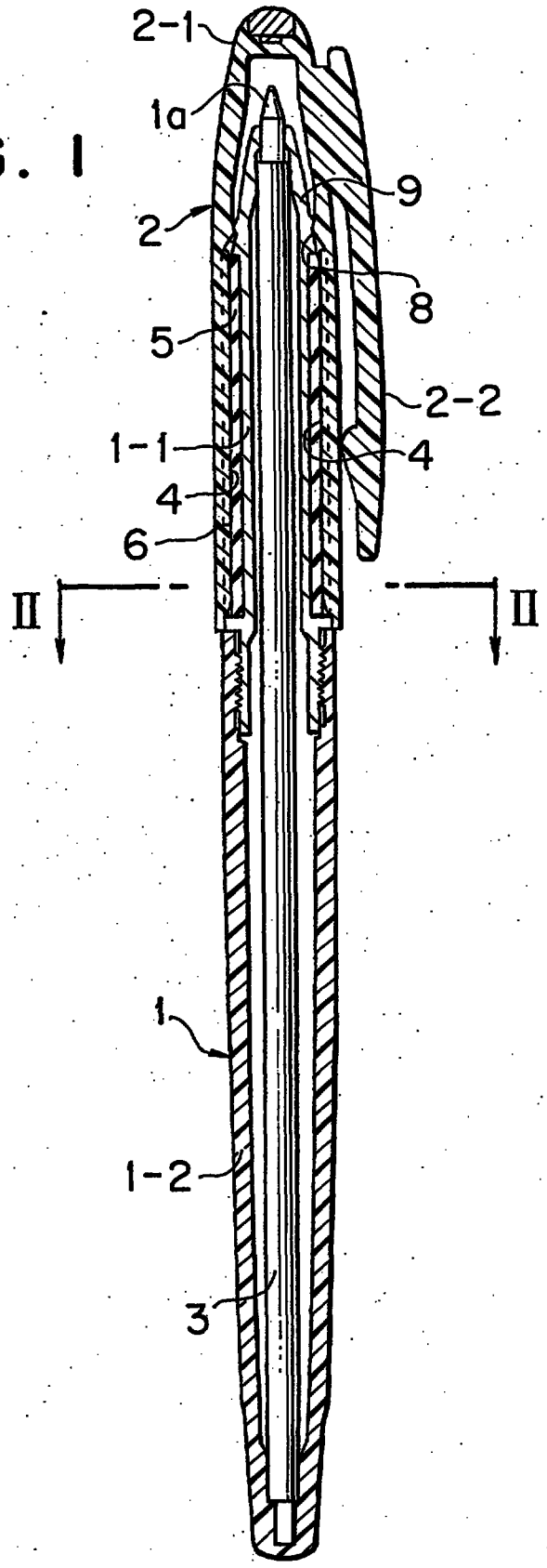

FIG. 2A

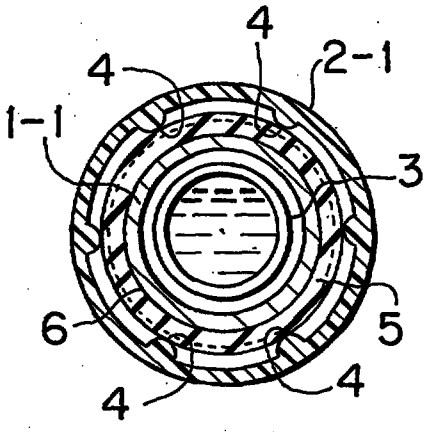

FIG. 2B

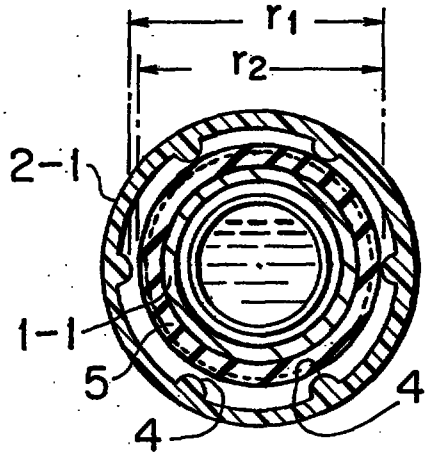

FIG. 3

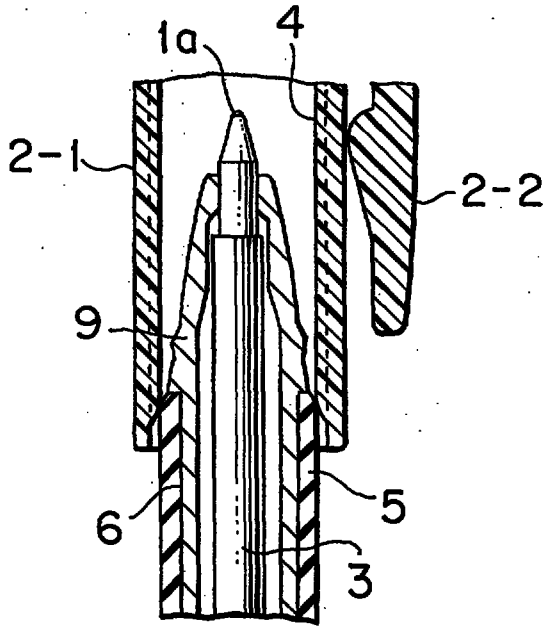

ABSTRACT

CAP FOR WRITING TOOL

It is intended to reduce the force of contact of a cap with an elastic member provided on the outside of a cylindrical shell and thereby permit smooth mounting and removal of the cap. In a writing tool having on the outside of a cylindrical shell 1 an elastic member 5 of a different material from the material of a cap 2, a plurality of longitudinal ribs 4 extending along the cylindrical shell are formed on the inner peripheral surface of a cap portion 2-1, whereby the operation for fitting the cap portion 2-1 on the cylindrical shell 1 and the operation for pulling it out from the same shell can be done smoothly.

(Figure 1)