(12) INTERNATIONAL APPLICATION PUBLISHED UNDER THE PATENT COOPERATION TREATY (PCT)

(19) World Intellectual Property Organization
International Bureau

(43) International Publication Date
30 May 2025 (30.05.2025)

WIPO | PCT

(10) International Publication Number
WO 2025/111045 A1

(51) International Patent Classification:
B01J 8/28 (2006.01) *C10G 11/18* (2006.01)
B01J 8/38 (2006.01)

(21) International Application Number:
PCT/US2024/045512

(22) International Filing Date:
06 September 2024 (06.09.2024)

(25) Filing Language: English

(26) Publication Language: English

(30) Priority Data:
63/601,829 22 November 2023 (22.11.2023) US

(71) Applicant: **CHEVRON U.S.A. INC.** [US/US]; P.O. Box 6006, San Ramon, CA 94583-2324 (US).

(72) Inventors: **LUO, Huping**; Chevron Corporation, P.O. Box 6006, San Ramon, CA 94583-0806 (US). **OUYANG, Xiaoying**; Chevron Corporation, P.O. Box 6006, San Ramon, CA 94583-0806 (US). **LANE, Christopher Declan**; Chevron Corporation, P.O. Box 6006, San Ramon, CA 94583-0806 (US).

(74) Agent: **CARMEN, Michael, E.**; Ryan, Mason & Lewis, LLP, 48 South Service Road, Suite 100, Melville, NY 11747 (US).

(81) Designated States *(unless otherwise indicated, for every kind of national protection available)*: AE, AG, AL, AM, AO, AT, AU, AZ, BA, BB, BG, BH, BN, BR, BW, BY, BZ, CA, CH, CL, CN, CO, CR, CU, CV, CZ, DE, DJ, DK, DM, DO, DZ, EC, EE, EG, ES, FI, GB, GD, GE, GH, GM, GT, HN, HR, HU, ID, IL, IN, IQ, IR, IS, IT, JM, JO, JP, KE, KG, KH, KN, KP, KR, KW, KZ, LA, LC, LK, LR, LS, LU, LY, MA, MD, MG, MK, MN, MU, MW, MX, MY, MZ, NA, NG, NI, NO, NZ, OM, PA, PE, PG, PH, PL, PT, QA, RO, RS, RU, RW, SA, SC, SD, SE, SG, SK, SL, ST, SV, SY, TH, TJ, TM, TN, TR, TT, TZ, UA, UG, US, UZ, VC, VN, WS, ZA, ZM, ZW.

(84) Designated States *(unless otherwise indicated, for every kind of regional protection available)*: ARIPO (BW, CV, GH, GM, KE, LR, LS, MW, MZ, NA, RW, SC, SD, SL, ST, SZ, TZ, UG, ZM, ZW), Eurasian (AM, AZ, BY, KG, KZ, RU, TJ, TM), European (AL, AT, BE, BG, CH, CY, CZ, DE, DK, EE, ES, FI, FR, GB, GR, HR, HU, IE, IS, IT, LT, LU, LV, MC, ME, MK, MT, NL, NO, PL, PT, RO, RS, SE, SI, SK, SM, TR), OAPI (BF, BJ, CF, CG, CI, CM, GA, GN, GQ, GW, KM, ML, MR, NE, SN, TD, TG).

(54) Title: FLUIDIZED BED REACTOR SYSTEM AND CONTINUOUS PROCESS FOR CATALYTIC CRACKING OF LIGHT HYDROCARBONS

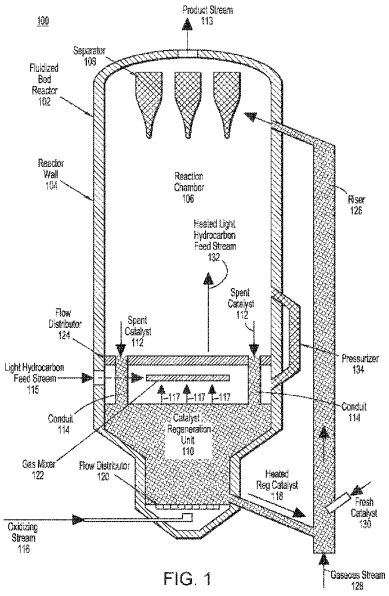

FIG. 1

(57) Abstract: A fluidized bed reactor system including a fluidized, bed reactor configured to receive a heated light hydrocarbon feed stream flowing upwards and a. heated regenerated catalyst at a temperature sufficient to crack the heated light hydrocarbon feed, stream to produce a product effluent stream containing hydrogen and spent, catalyst, having coke deposits, a catalyst regeneration unit operatively connected to a bottom portion of the fluidized bed reactor, the catalyst regeneration unit, being configured to receive the spent, catalyst flowing downwards and combust the coke deposits to produce the heated regenerated catalyst and a heated gas effluent for generating the heated light hydrocarbon feed stream, and a riser externally attached to the fluidized bed reactor and the catalyst regeneration unit, the riser being configured to receive the heated regenerated catalyst and a gas-based stream to flow the heated regenerated catalyst upwards to the fluidized bed reactor.

WO 2025/111045 A1

[Continued on next page]

Published:
— *with international search report (Art. 21(3))*