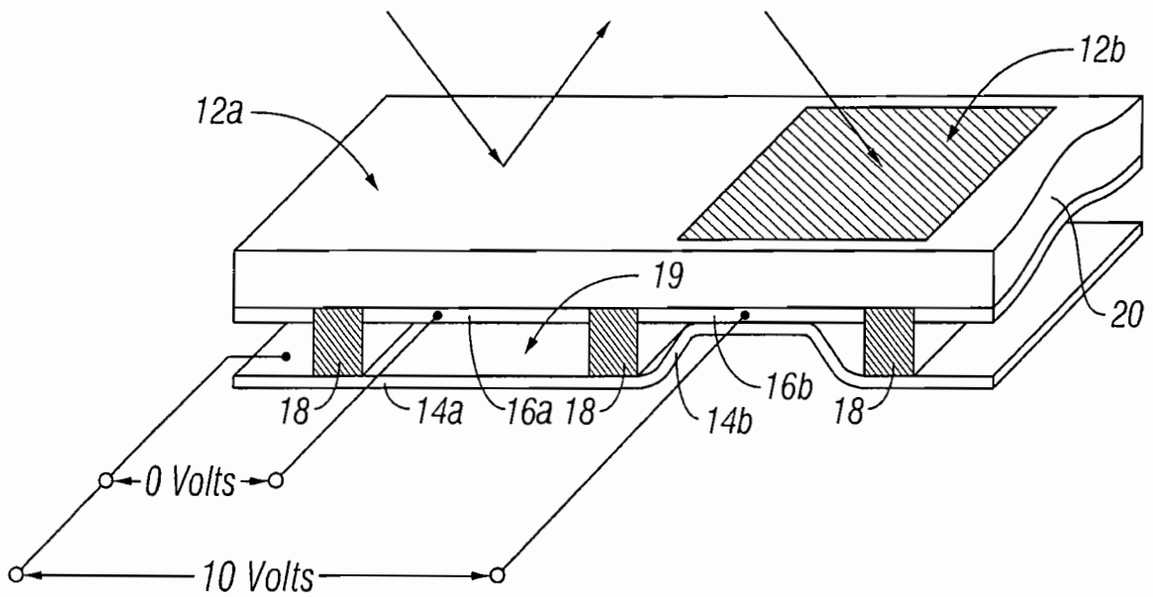


FIG. 1

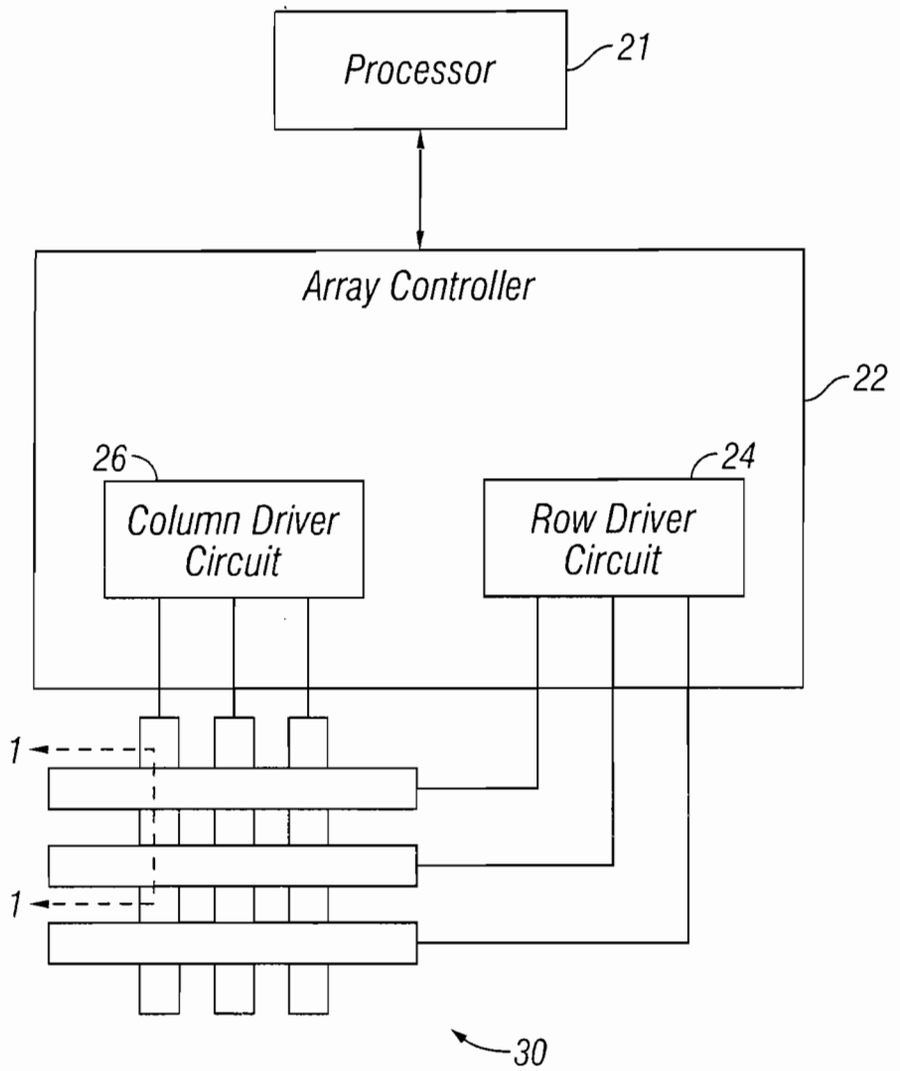
Processor
21
Array Controller
22
26
Column Driver Circuit
24
Row Driver Circuit
1
1
30

FIG. 2

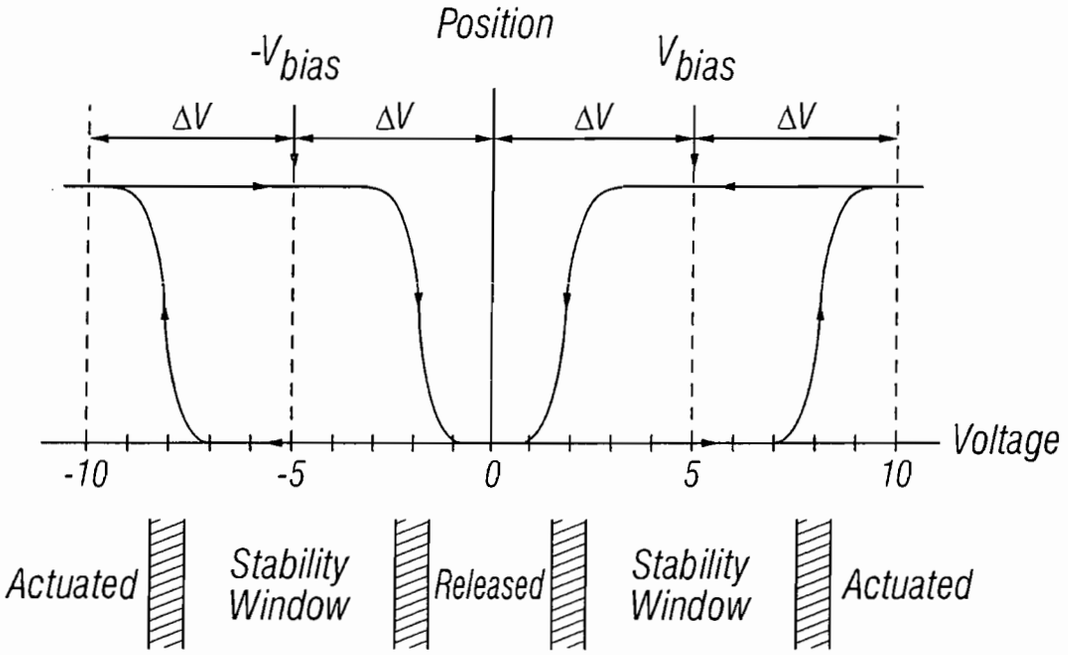


FIG. 3

| Row Output Signals | Column Output Signals: $+V_{bias}$ | Column Output Signals: $-V_{bias}$ |
|---|---|---|
| 0 | Stable | Stable |
| $+\Delta V$ | Release | Actuate |

FIG. 4

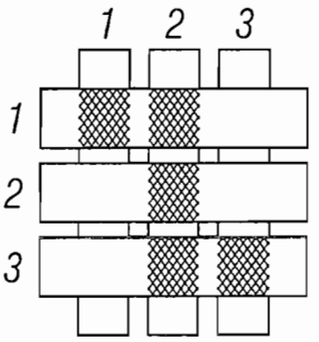
1
2
3
1
2
3

FIG. 5A

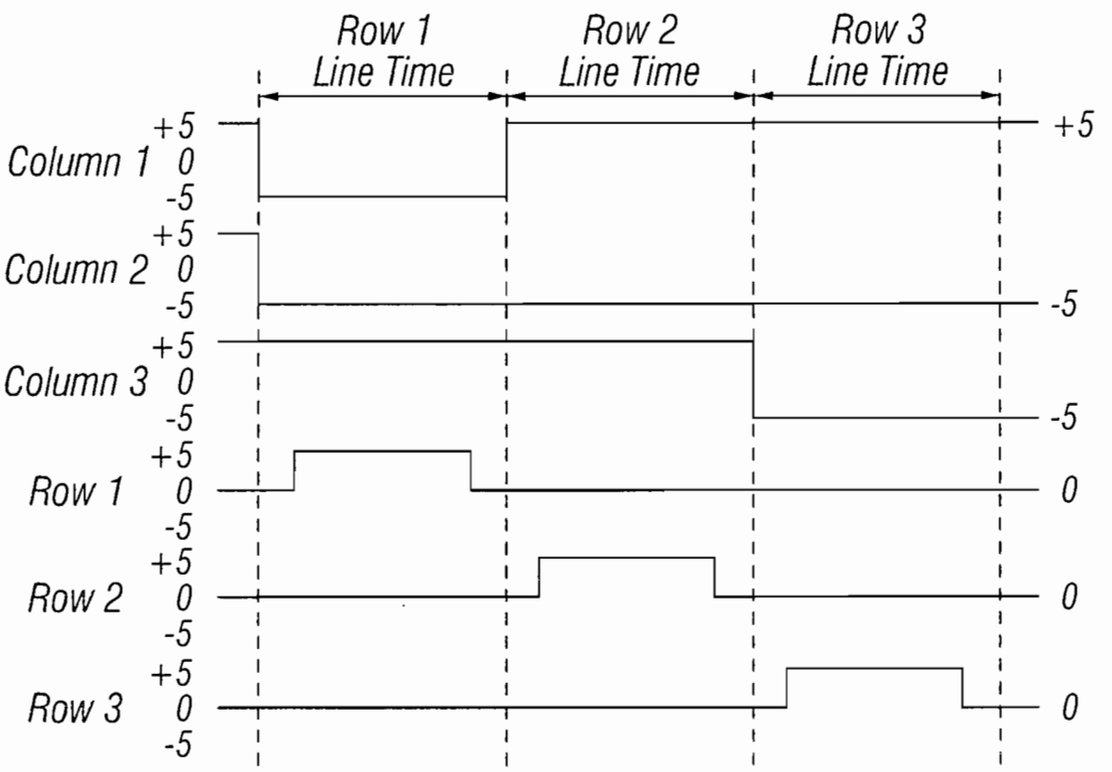
Row 1
Line Time
Row 2
Line Time
Row 3
Line Time
Column 1
Column 2
Column 3
Row 1
Row 2
Row 3
+5
0
-5
+5
-5
-5
0
0
0

FIG. 5B

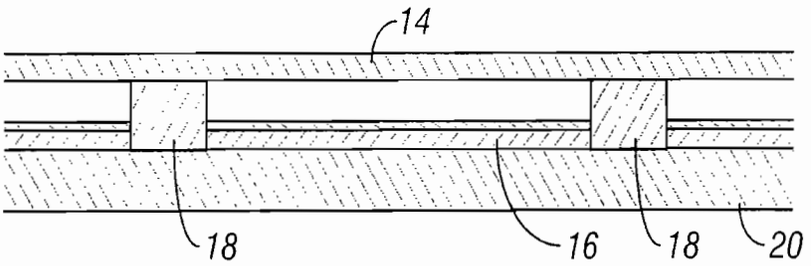


FIG. 6A

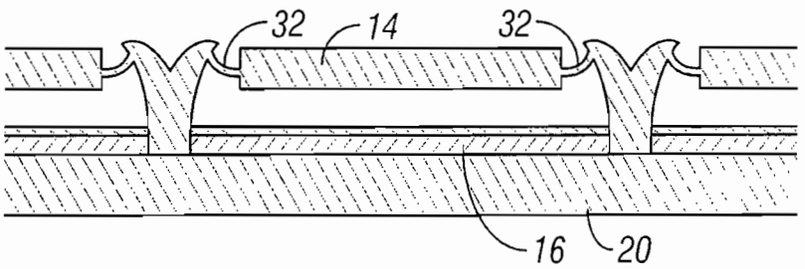


FIG. 6B

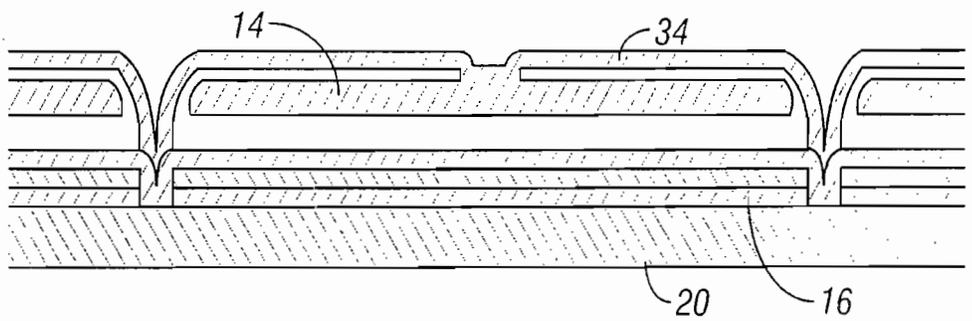


FIG. 6C

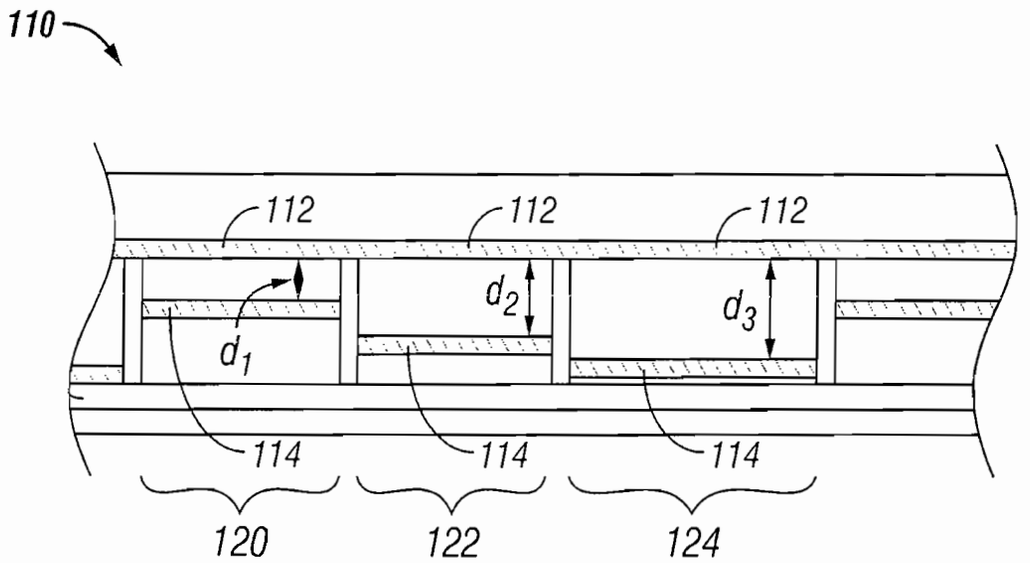
110
112
112
112
$d_1$
$d_2$
$d_3$
114
114
114
120
122
124

FIG. 7

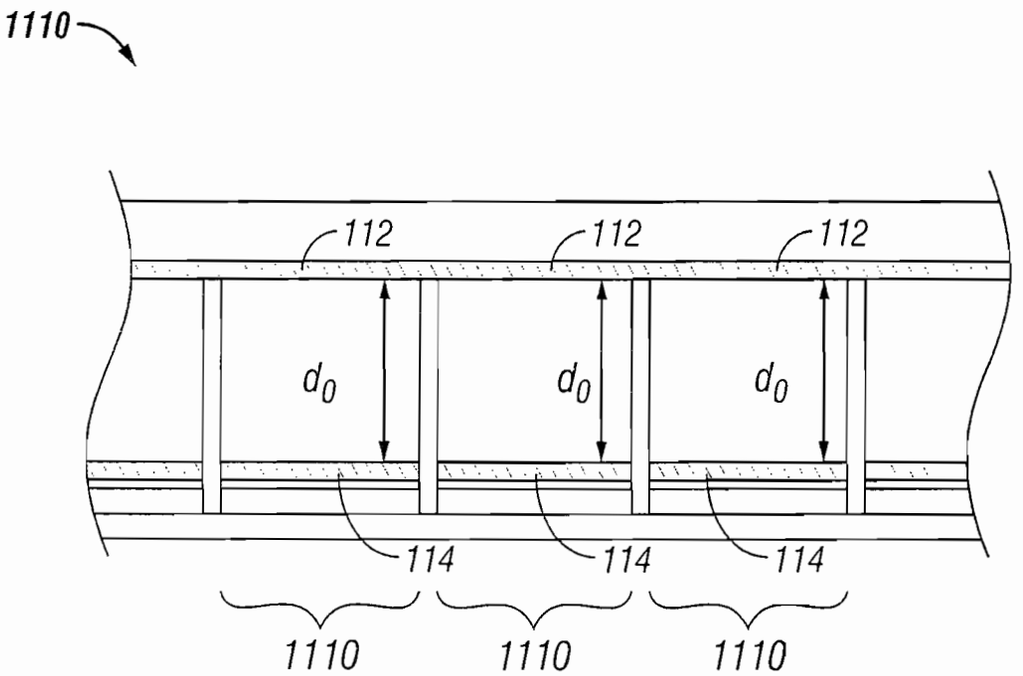
1110
112
112
112
$d_0$
$d_0$
$d_0$
114
114
114
1110
1110
1110

FIG. 8

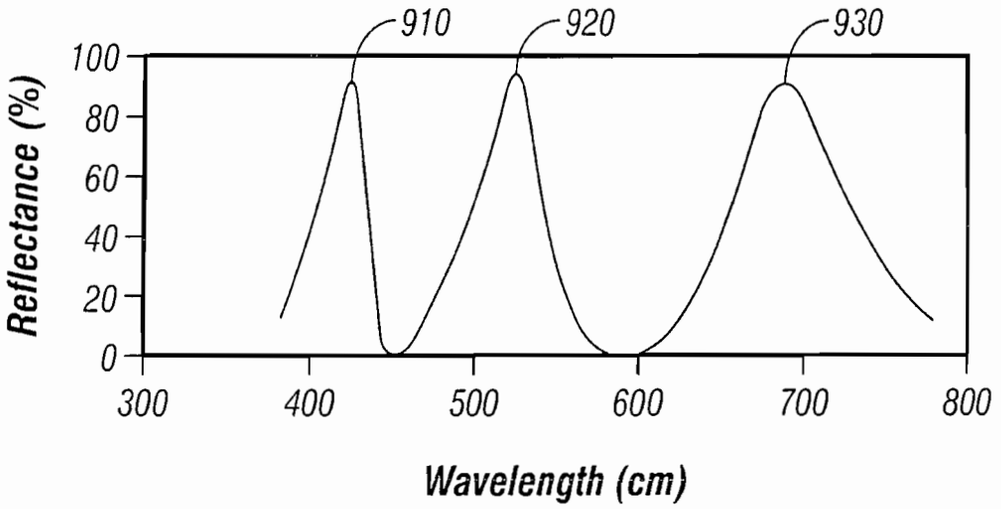


FIG. 9

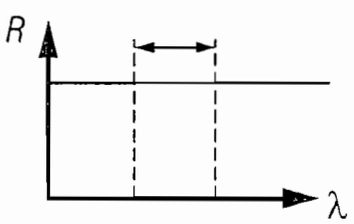


FIG. 10A

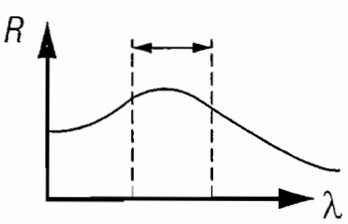


FIG. 10B

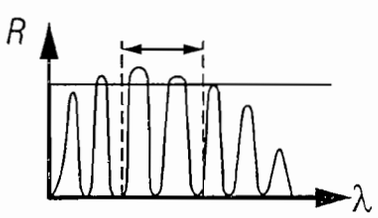


FIG. 10C

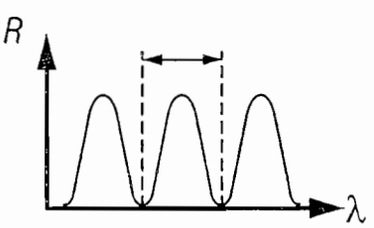


FIG. 10D

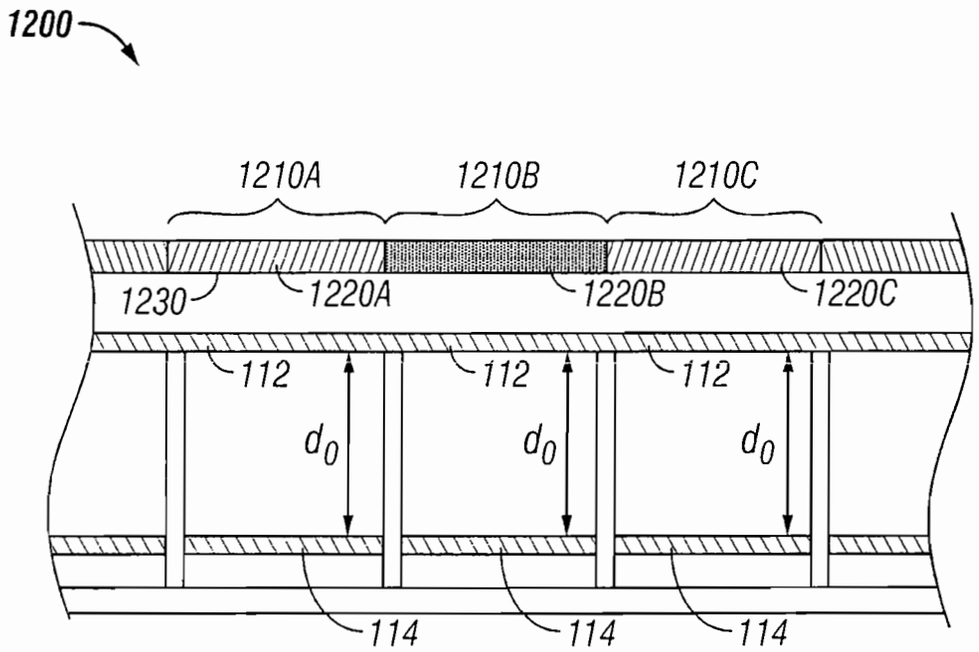


FIG. 11A

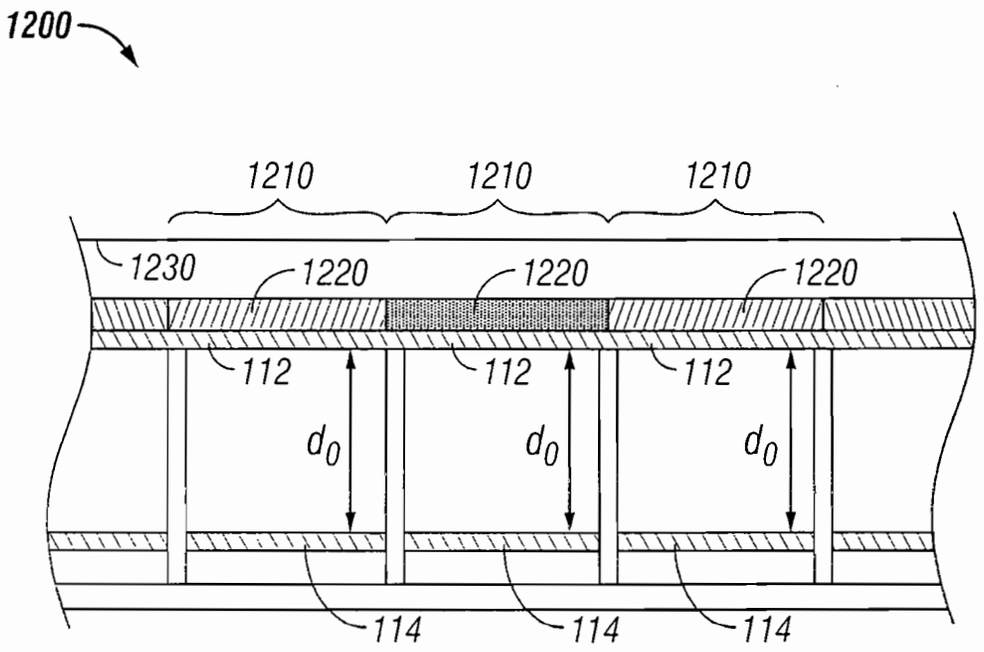


FIG. 11B

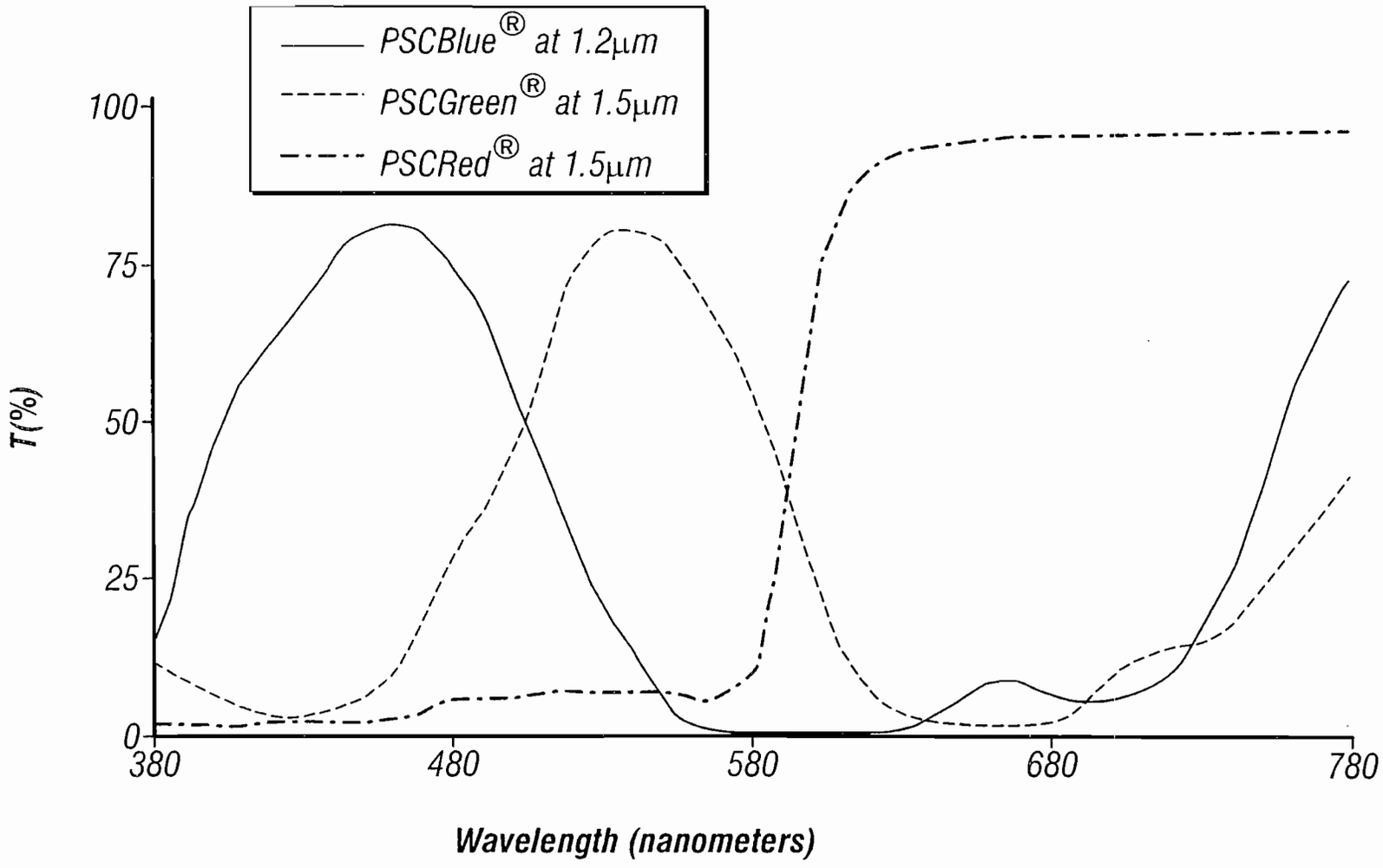
PSCBlue® at 1.2μm
PSCGreen® at 1.5μm
PSCRed® at 1.5μm
100
75
50
25
0
T(%)
380
480
580
680
780
Wavelength (nanometers)

FIG. 12

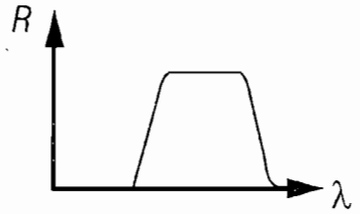


FIG. 13A

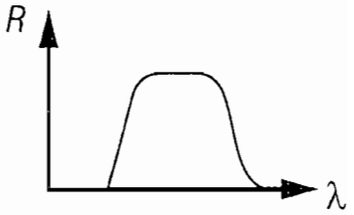


FIG. 13B

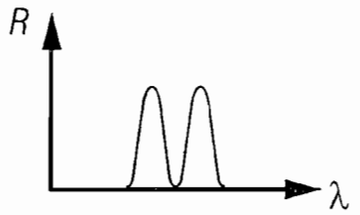


FIG. 13C

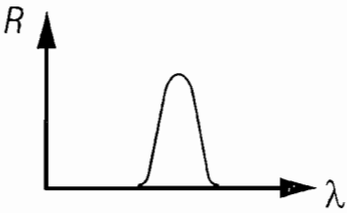


FIG. 13D

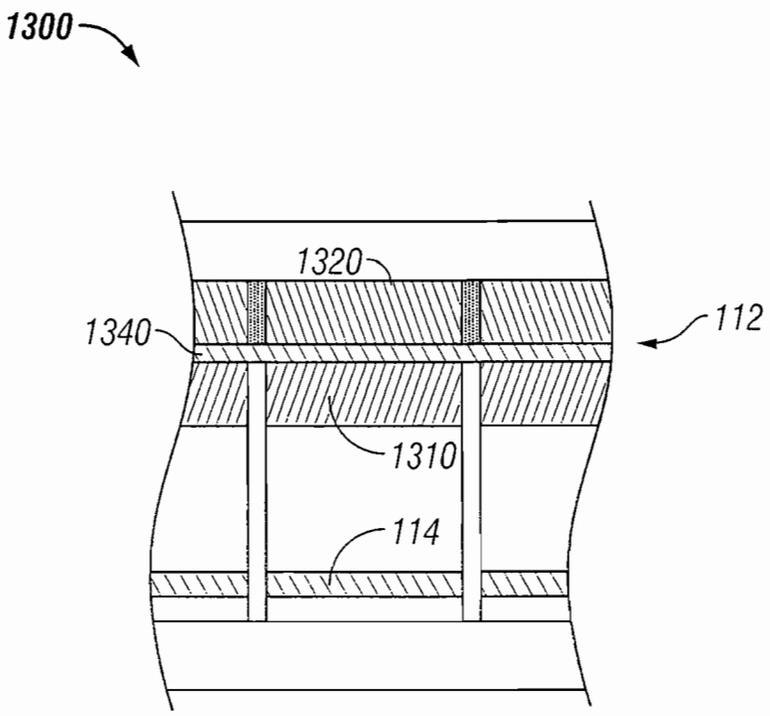


FIG. 14

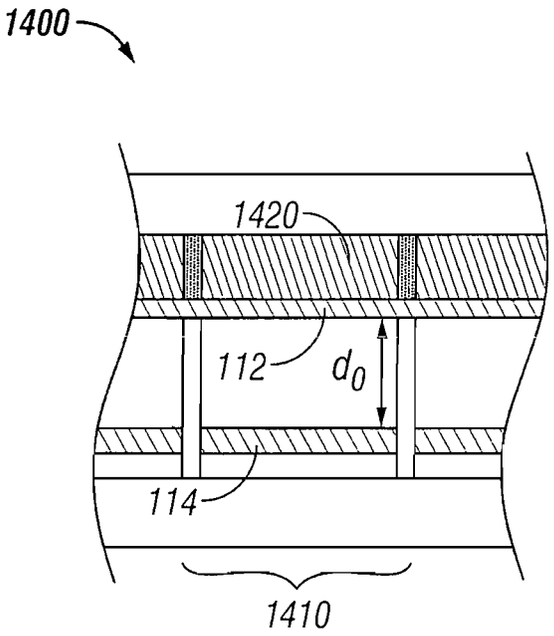


FIG. 15

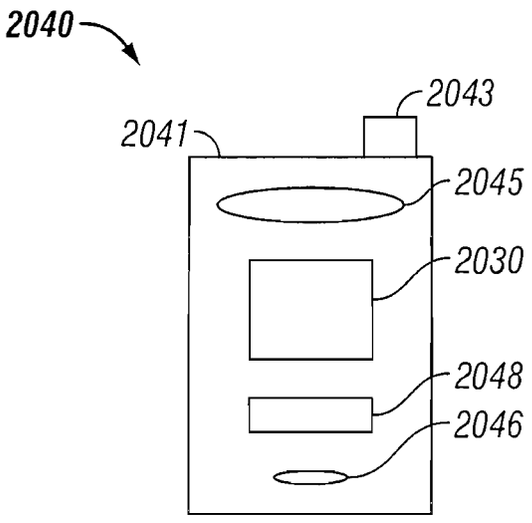


FIG. 16A

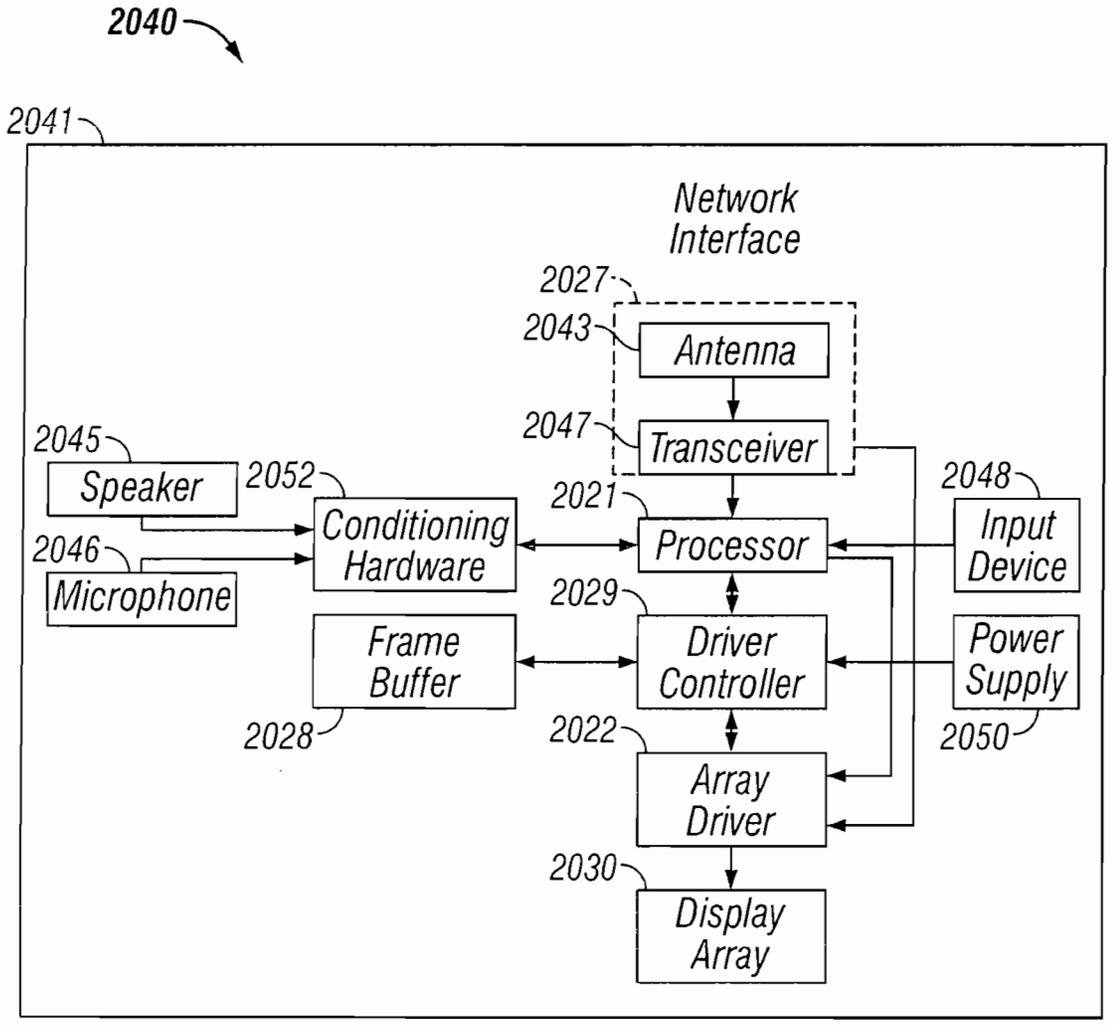
2040
2041
Network Interface
2027
2043
Antenna
2047
Transceiver
2045
Speaker
2052
Conditioning Hardware
2021
Processor
2048
Input Device
2046
Microphone
2029
Driver Controller
Power Supply
Frame Buffer
2028
2022
2050
Array Driver
2030
Display Array

FIG. 16B