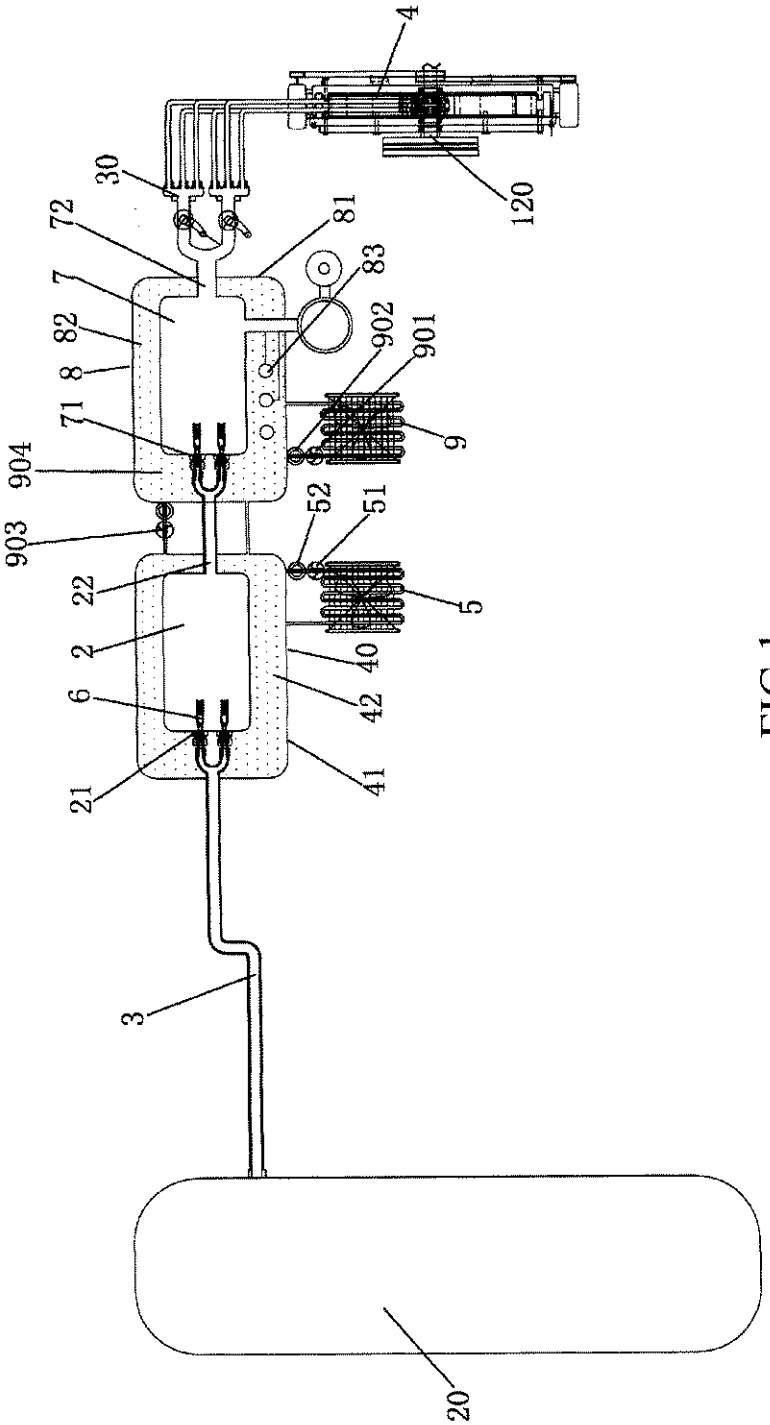
4
120
30
72
81
83
7
902
901
82
8
71
9
904
903
52
51
22
5
2
40
6
42
21
41
3
20

FIG 1

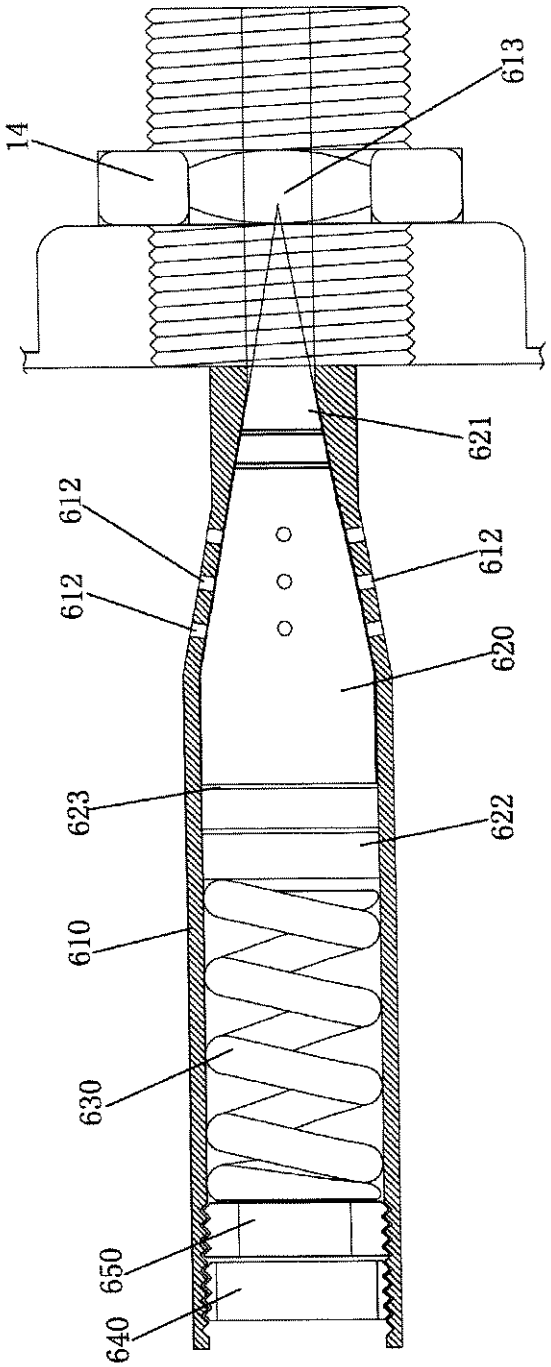

FIG 2

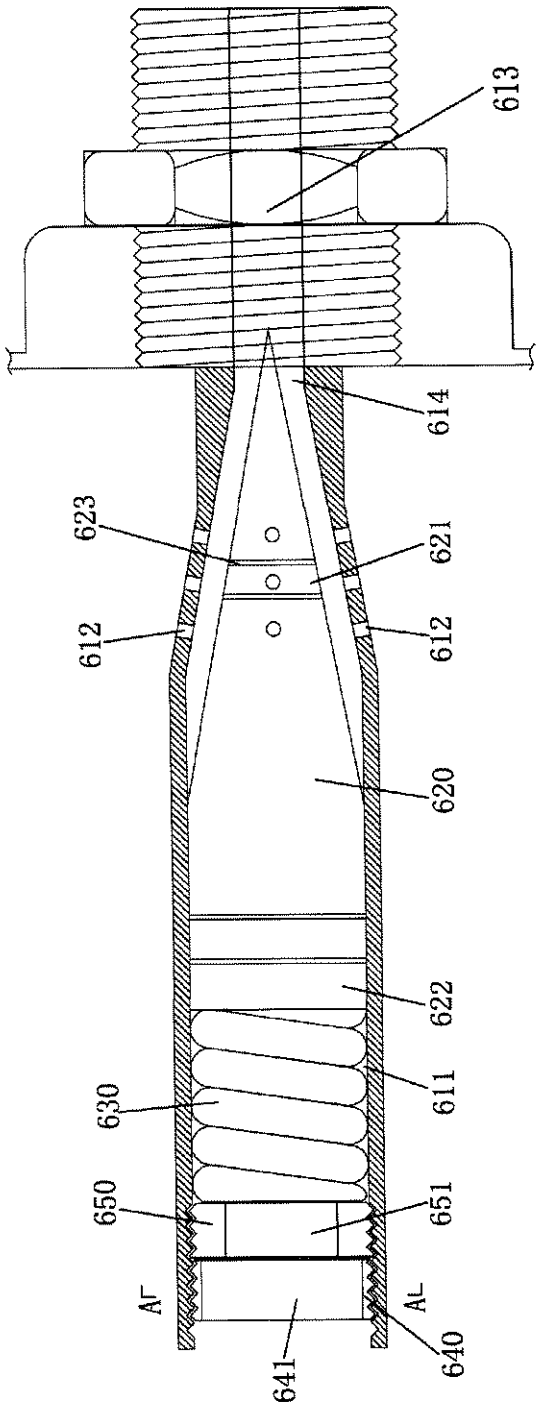
613
614
623
621
612
612
620
622
611
630
650
651
AΓ
AL
641
640

FIG 3

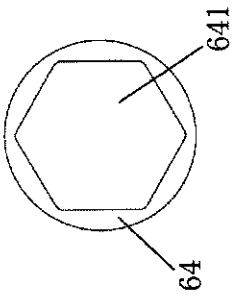
641
64

FIG 4

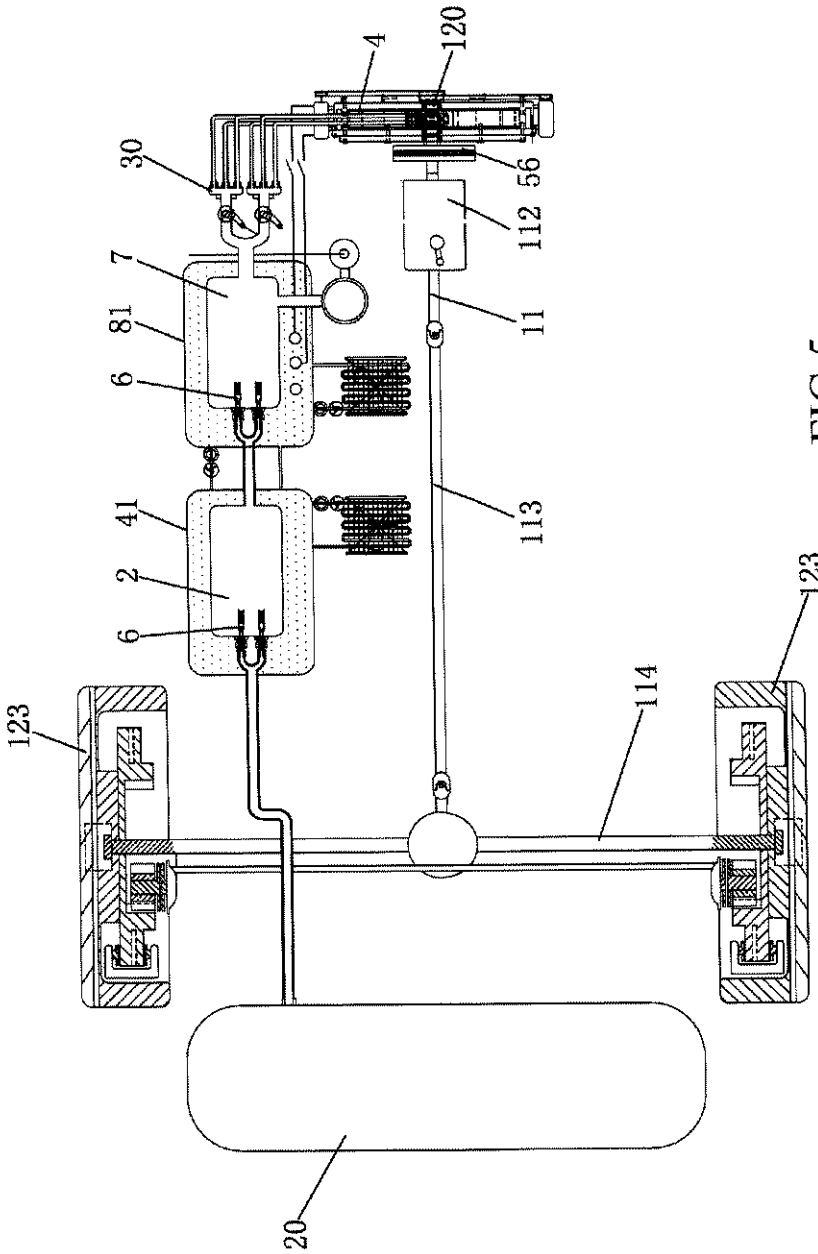

FIG 5

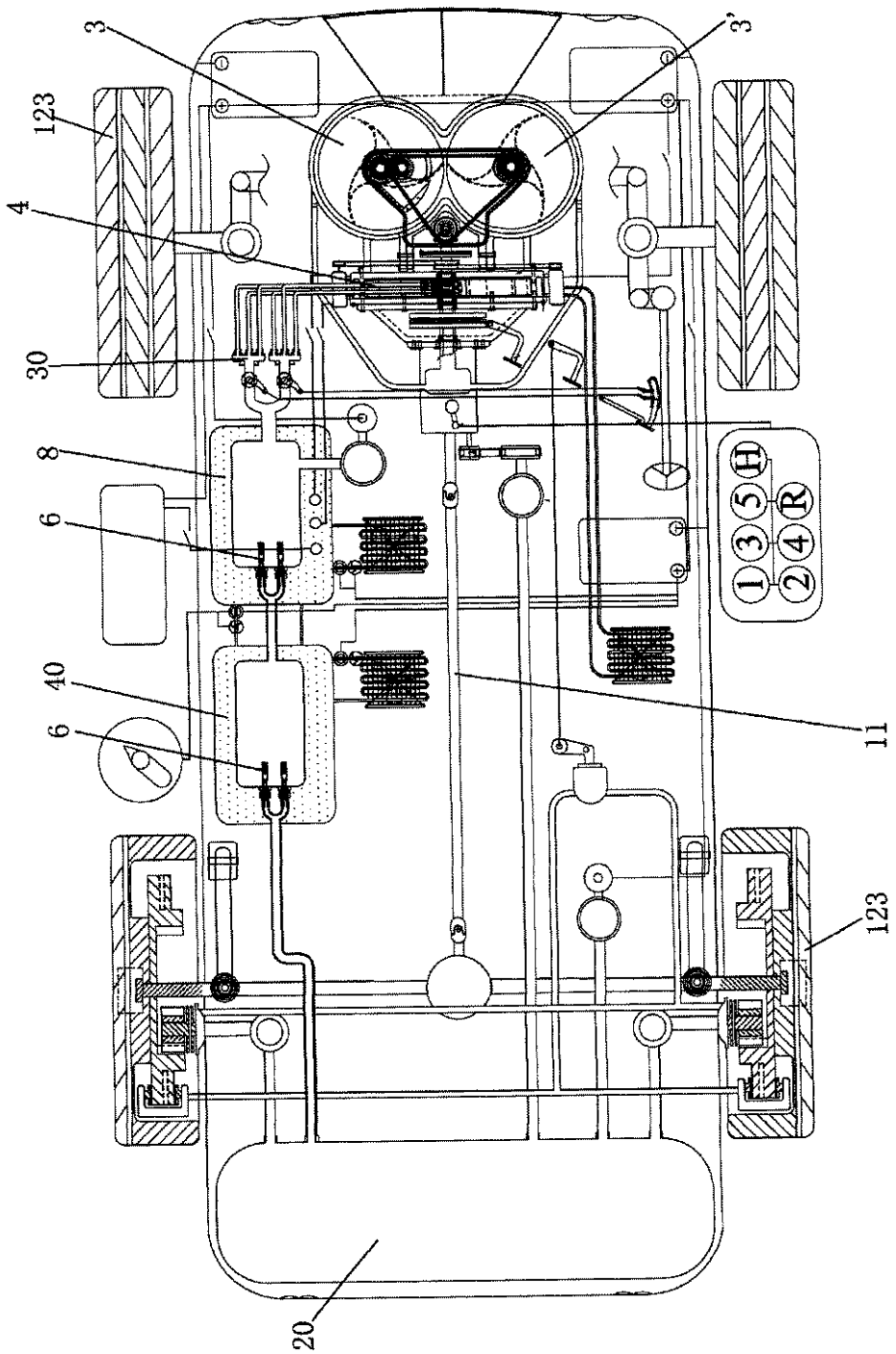

FIG 6

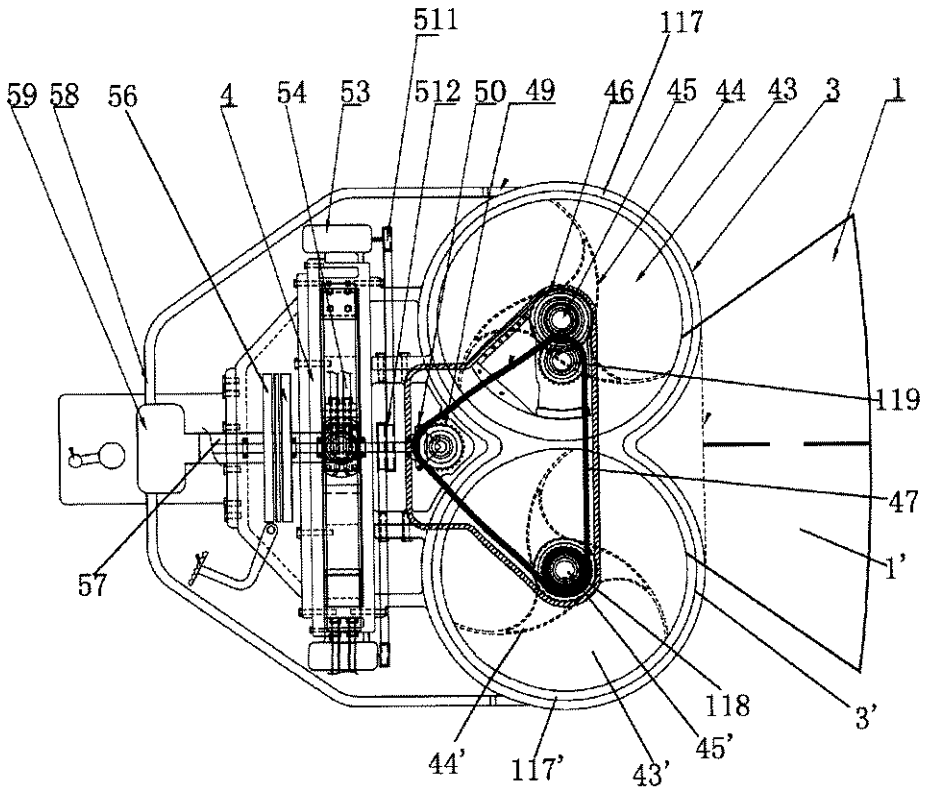
511
117
59
58
56
4
54
53
512
50
49
46
45
44
43
3
1
119
47
1'
57
118
3'
45'
44'
117'
43'

FIG 7

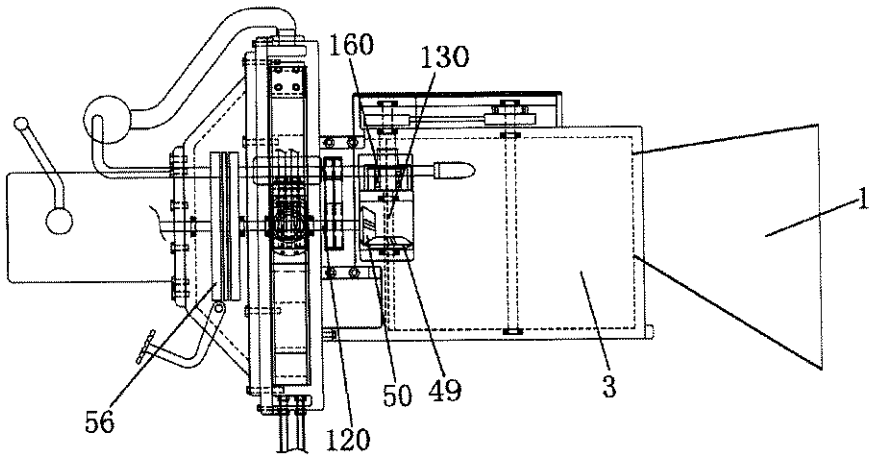
160
130
1
56
120
50
49
3

FIG 8

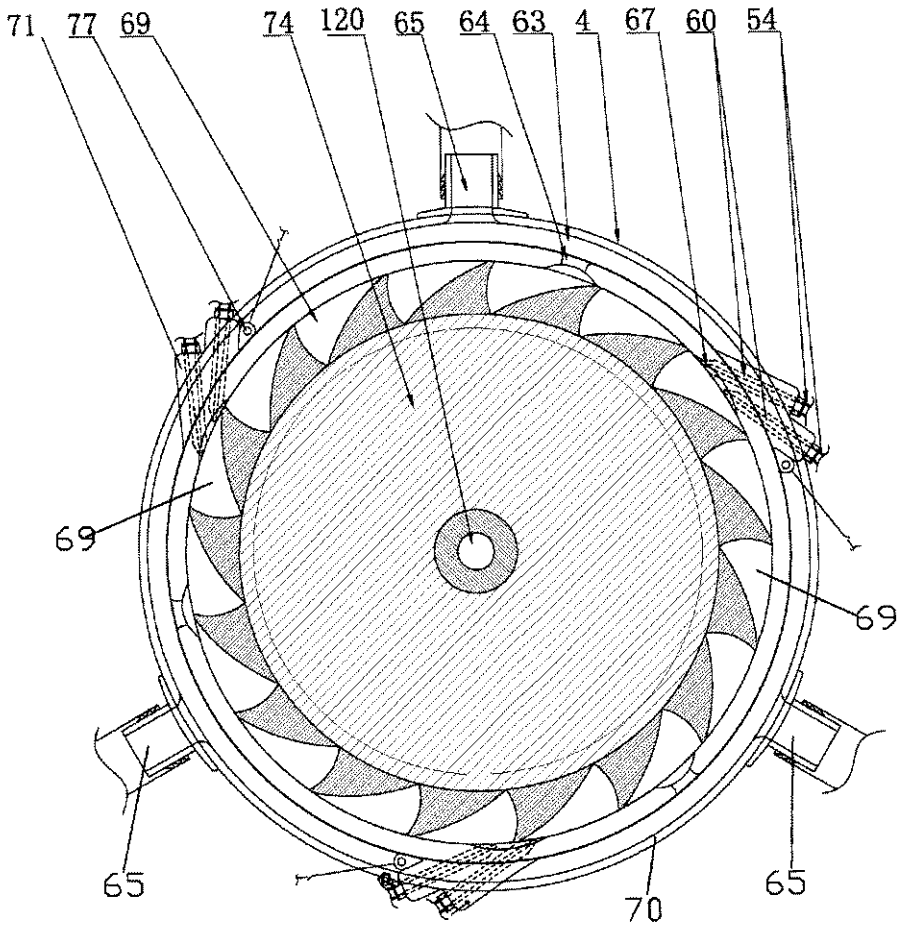

FIG 9

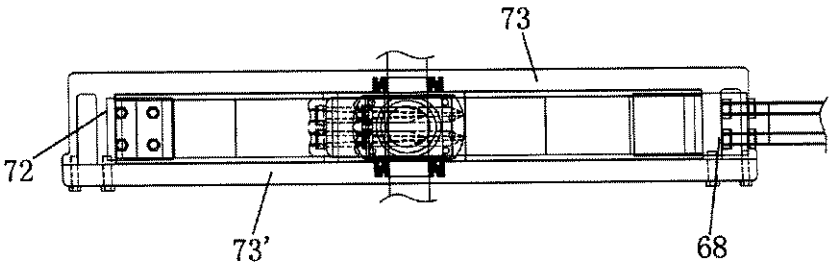

FIG 10

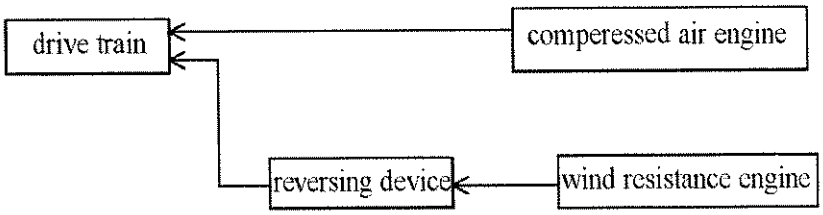
drive train
comperessed air engine
reversing device
wind resistance engine

FIG 11

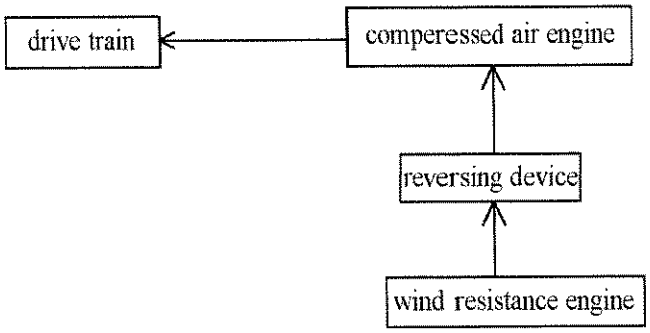
drive train
comperessed air engine
reversing device
wind resistance engine

FIG 12

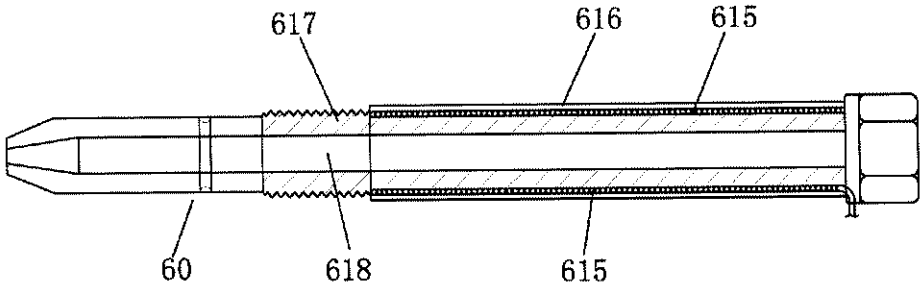

FIG 13

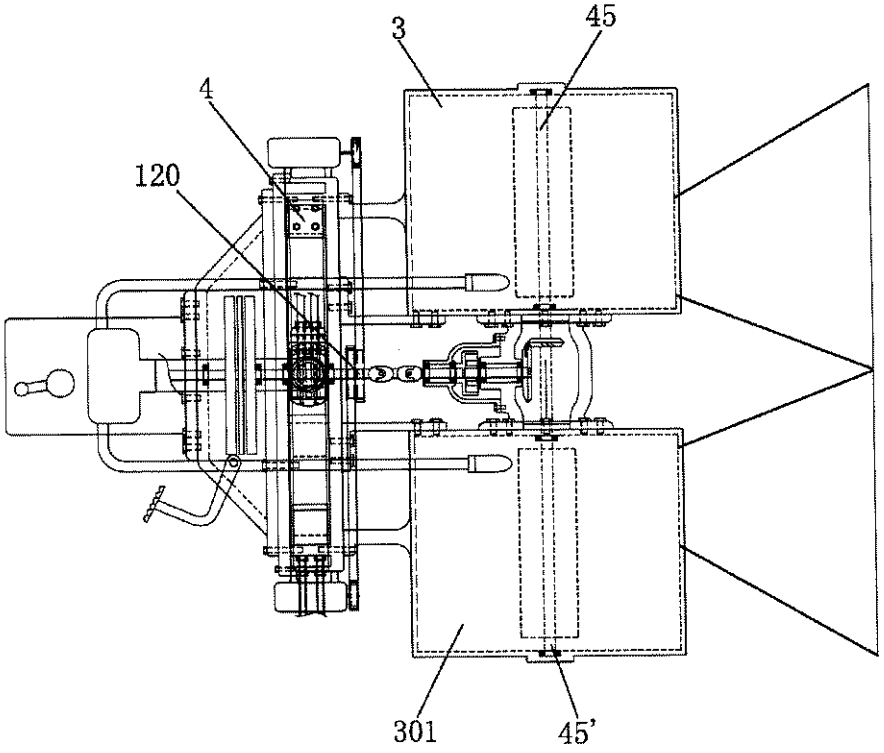

FIG 14

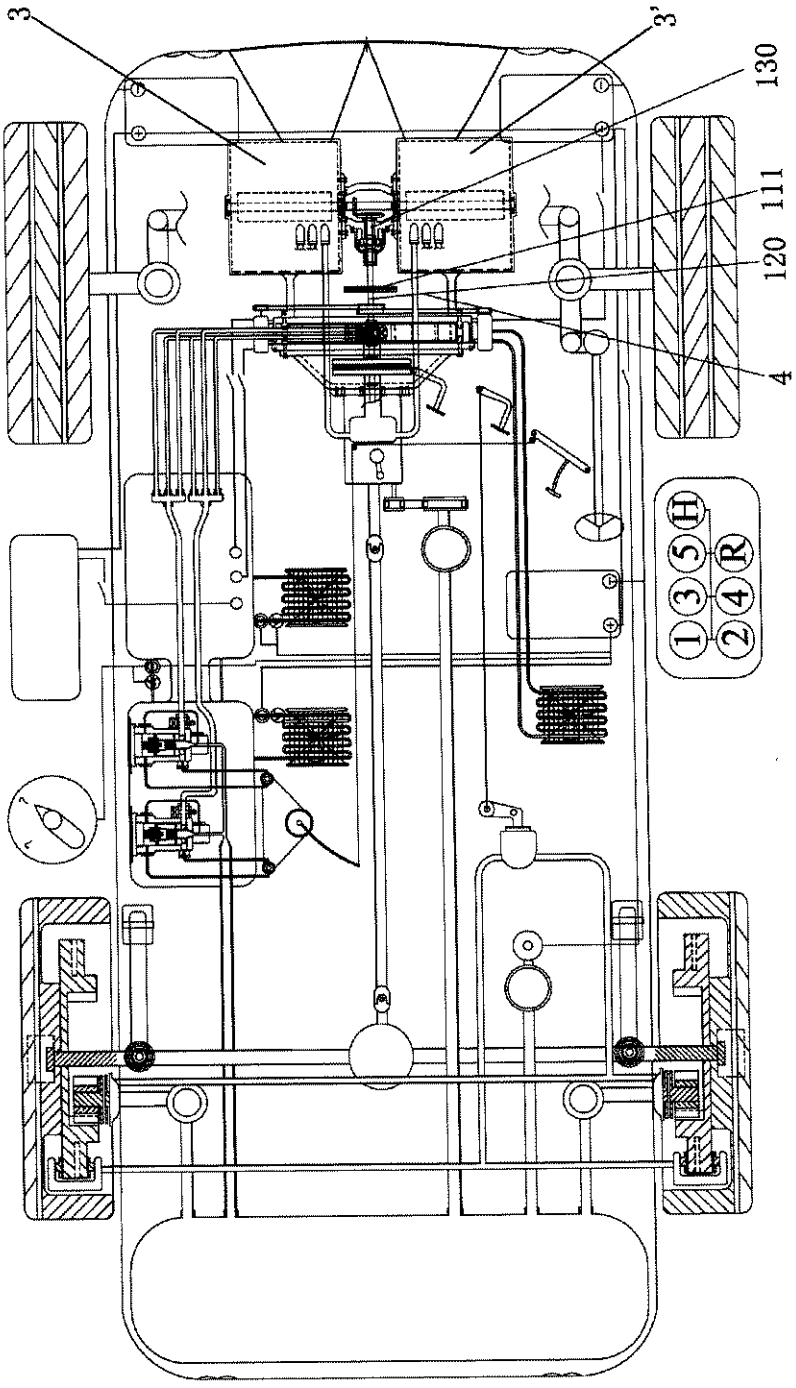

FIG 15

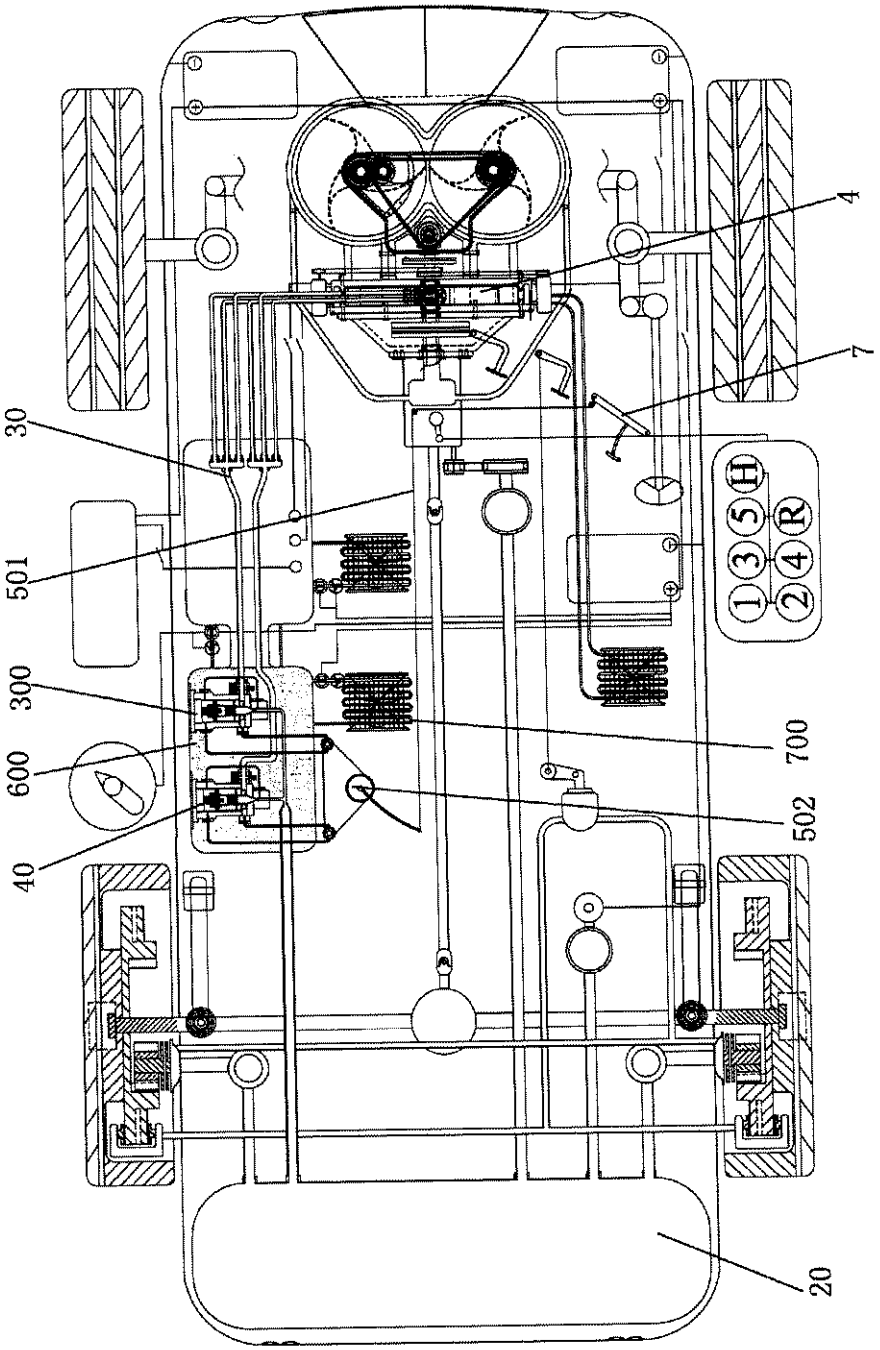

FIG 16

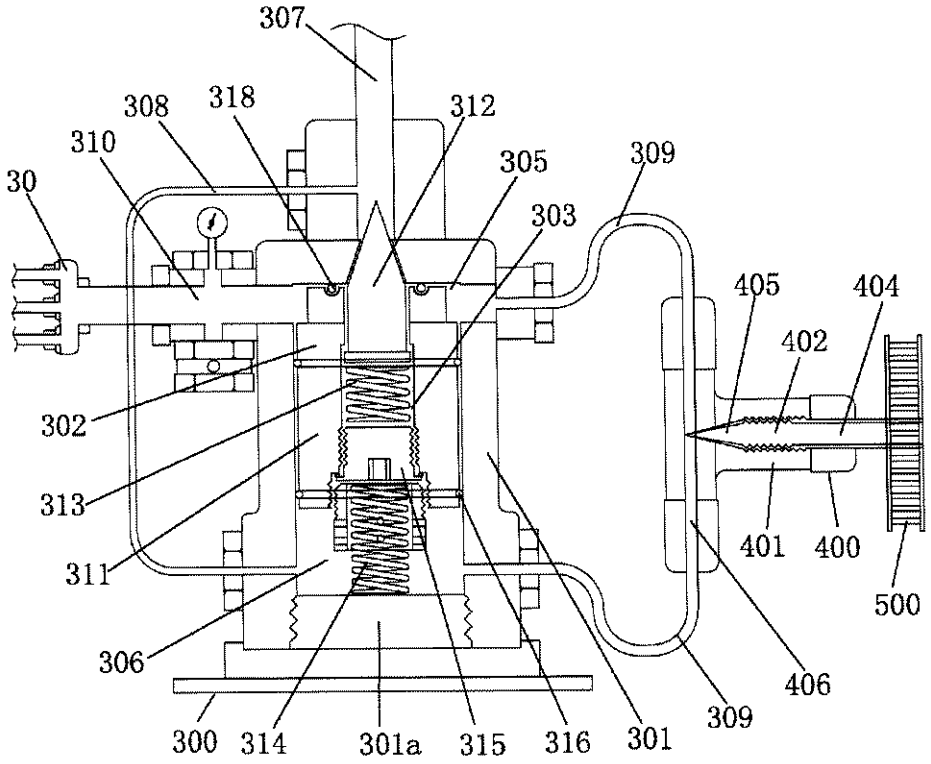
307
308
318
312
310
305
309
30
303
405
404
402
302
313
311
401
400
500
306
406
309
300
314
301a
315
316
301

FIG 17

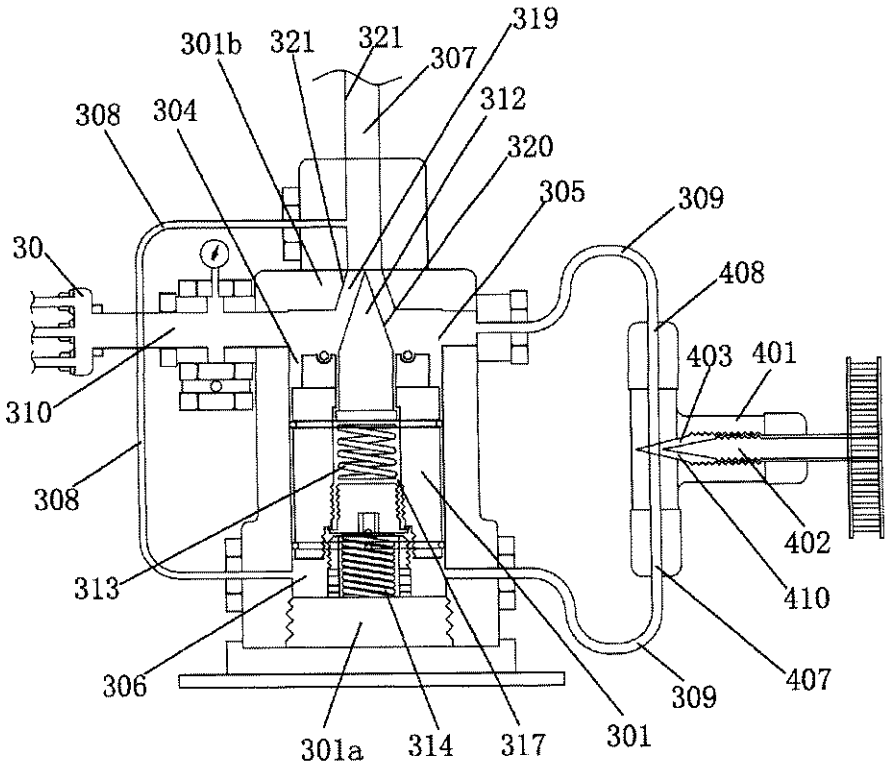
301b
321
321
319
307
312
308
304
320
305
309
30
408
403
401
310
308
402
313
410
306
407
309
301a
314
317
301

FIG 18

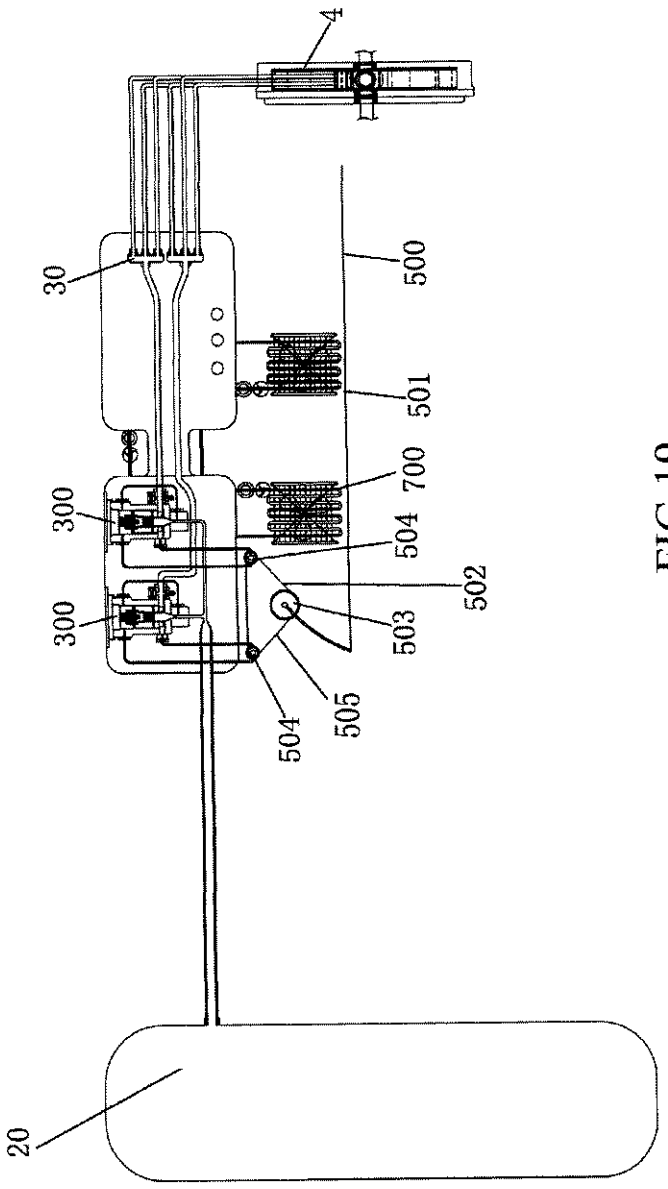

FIG 19

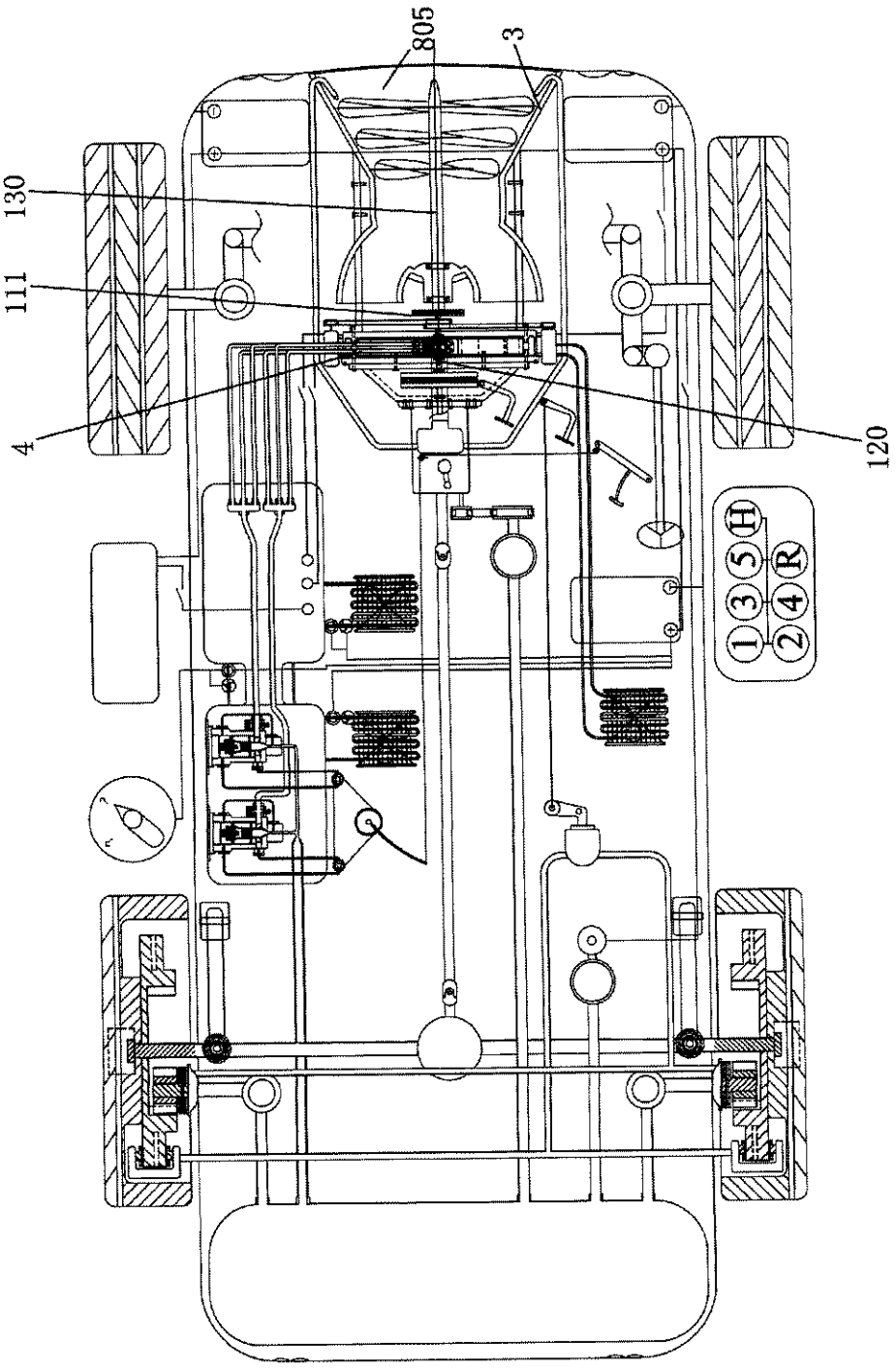

FIG 20

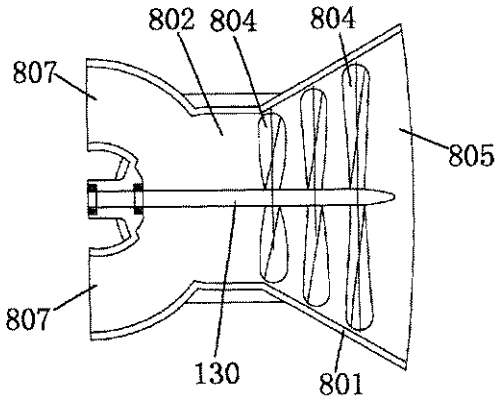

FIG 21

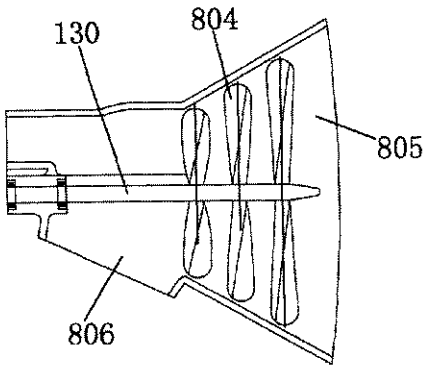

FIG 22

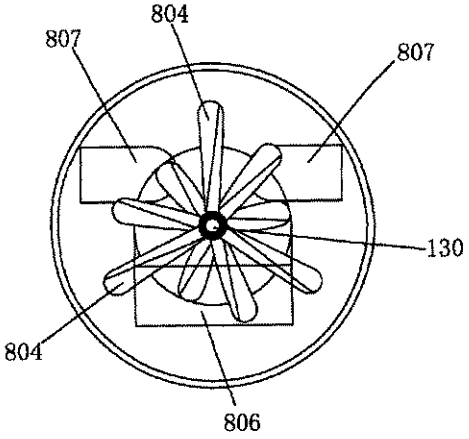

FIG 23