20000 1559-4
IDS

PCT WORLD INTELLECTUAL PROPERTY ORGANIZATION
International Bureau

INTERNATIONAL APPLICATION PUBLISHED UNDER THE PATENT COOPERATION TREATY (PCT)

(51) International Patent Classification 7 : F25B 9/00 — A1

(11) International Publication Number: **WO 00/08394**

(43) International Publication Date: 17 February 2000 (17.02.00)

(21) International Application Number: PCT/US99/17466

(22) International Filing Date: 2 August 1999 (02.08.99)

(30) Priority Data:
09/127,986 — 3 August 1998 (03.08.98) — US

(71) Applicant: YORK INTERNATIONAL CORPORATION [US/US]; 631 South Richland Avenue, York, PA 17403 (US).

(72) Inventor: JUDGE, John, F.; 18599 Ridge Meadow Road, Stewartstown, PA 17363 (US).

(74) Agents: GARRETT, Arthur, S. et al.; Finnegan, Henderson, Farabow, Garrett & Dunner, L.L.P., 1300 I Street, N.W., Washington, DC 20005-3315 (US).

(81) Designated States: AE, AL, AM, AT, AU, AZ, BA, BB, BG, BR, BY, CA, CH, CN, CU, CZ, DE, DK, EE, ES, FI, GB, GD, GE, GH, GM, HR, HU, ID, IL, IN, IS, JP, KE, KG, KP, KR, KZ, LC, LK, LR, LS, LT, LU, LV, MD, MG, MK, MN, MW, MX, NO, NZ, PL, PT, RO, RU, SD, SE, SG, SI, SK, SL, TJ, TM, TR, TT, UA, UG, UZ, VN, YU, ZA, ZW, ARIPO patent (GH, GM, KE, LS, MW, SD, SL, SZ, UG, ZW), Eurasian patent (AM, AZ, BY, KG, KZ, MD, RU, TJ, TM), European patent (AT, BE, CH, CY, DE, DK, ES, FI, FR, GB, GR, IE, IT, LU, MC, NL, PT, SE), OAPI patent (BF, BJ, CF, CG, CI, CM, GA, GN, GW, ML, MR, NE, SN, TD, TG).

Published
With international search report.

(54) Title: METHOD AND SYSTEM FOR THE DETERMINATION OF A TERNARY REFRIGERANT MIXTURE COMPOSITION

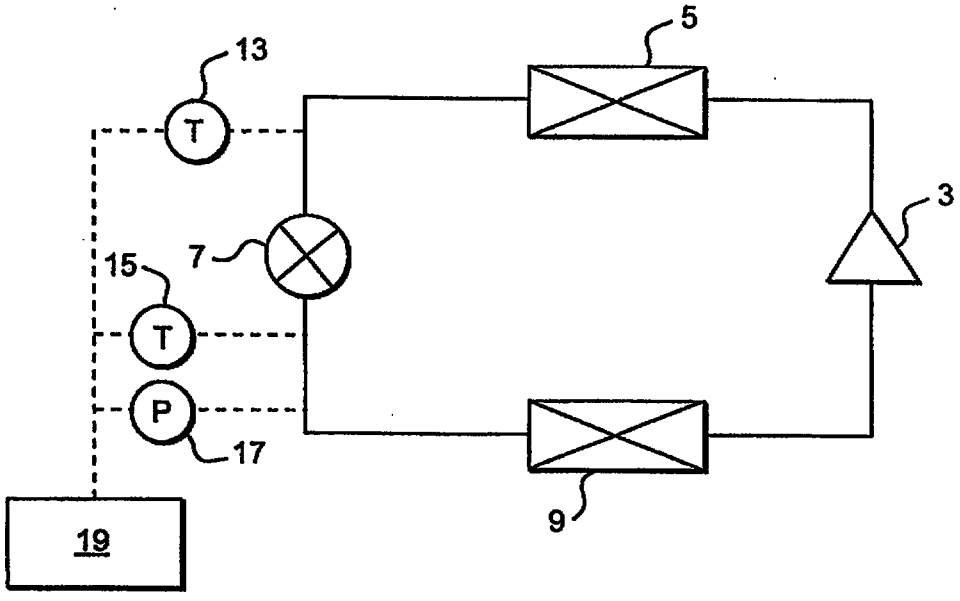

(57) Abstract

A method for determining the composition of a ternary refrigerant in a refrigeration system. The method calculates the composition of the ternary refrigerant under the assumption that the expansion cycle is isenthalpic and that the ratio of two components in the ternary mixture remain fixed in relation to one another before and after the expansion. These assumptions permit the calculation of composition of a ternary mixture with relatively few inputs.