(12) INTERNATIONAL APPLICATION PUBLISHED UNDER THE PATENT COOPERATION TREATY (PCT)

(19) World Intellectual Property Organization
International Bureau

(43) International Publication Date
28 June 2018 (28.06.2018)

WIPO | PCT

(10) International Publication Number
WO 2018/115152 A1

(51) International Patent Classification:
B63B 25/16 (2006.01)

(21) International Application Number:
PCT/EP2017/083870

(22) International Filing Date:
20 December 2017 (20.12.2017)

(25) Filing Language: English

(26) Publication Language: English

(30) Priority Data:
16206668.2 23 December 2016 (23.12.2016) EP

(71) Applicant: **SINGLE BUOY MOORINGS INC.** [CH/CH]; Route de Fribourg 5, CH-1723 Marly (CH).

(72) Inventors: **BRINKEL, Theodorus Johannes Bernardus**; 24 Avenue de Fontvieille, Bât. Aigue Marine, 98000 Monaco (MC). **SASSEN, Wouter**; 24 Avenue de Fontvieille, Bât. Aigue Marine, 98000 Monaco (MC).

(74) Agent: **NEDERLANDSCH OCTROOIBUREAU**; P.O. Box 29720, 2502 LS The Hague (NL).

(81) Designated States *(unless otherwise indicated, for every kind of national protection available)*: AE, AG, AL, AM, AO, AT, AU, AZ, BA, BB, BG, BH, BN, BR, BW, BY, BZ, CA, CH, CL, CN, CO, CR, CU, CZ, DE, DJ, DK, DM, DO, DZ, EC, EE, EG, ES, FI, GB, GD, GE, GH, GM, GT, HN, HR, HU, ID, IL, IN, IR, IS, JO, JP, KE, KG, KH, KN, KP, KR, KW, KZ, LA, LC, LK, LR, LS, LU, LY, MA, MD, ME, MG, MK, MN, MW, MX, MY, MZ, NA, NG, NI, NO, NZ, OM, PA, PE, PG, PH, PL, PT, QA, RO, RS, RU, RW, SA, SC, SD, SE, SG, SK, SL, SM, ST, SV, SY, TH, TJ, TM, TN, TR, TT, TZ, UA, UG, US, UZ, VC, VN, ZA, ZM, ZW.

(84) Designated States *(unless otherwise indicated, for every kind of regional protection available)*: ARIPO (BW, GH, GM, KE, LR, LS, MW, MZ, NA, RW, SD, SL, ST, SZ, TZ, UG, ZM, ZW), Eurasian (AM, AZ, BY, KG, KZ, RU, TJ, TM), European (AL, AT, BE, BG, CH, CY, CZ, DE, DK, EE, ES, FI, FR, GB, GR, HR, HU, IE, IS, IT, LT, LU, LV, MC, MK, MT, NL, NO, PL, PT, RO, RS, SE, SI, SK, SM, TR), OAPI (BF, BJ, CF, CG, CI, CM, GA, GN, GQ, GW, KM, ML, MR, NE, SN, TD, TG).

(54) Title: FLOATING CRYOGENIC HYDROCARBON STORAGE STRUCTURE

Fig. 6

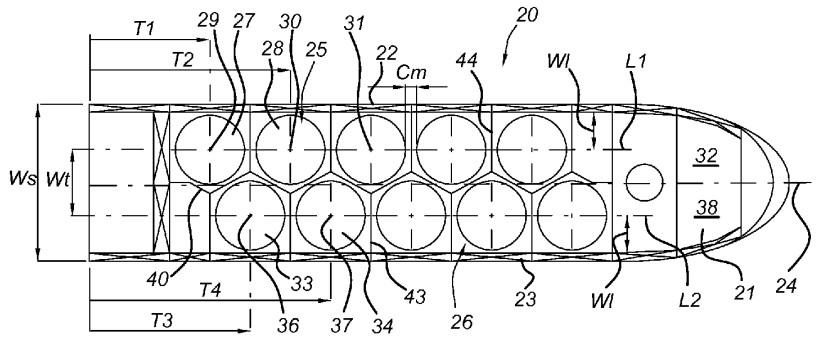

(57) Abstract: Floating cryogenic storage structure (20) including a hull (9) with a center line (24) extending in a length direction and two longitudinal side walls (22,23), the structure including at least three spherical storage tanks, two tanks (27,28) being situated with their midpoints (29,30) on spaced apart longitudinal positions (T1,T2) along a first line (L1) extending in the length direction at a first side (32) of the center line (24) and a third tank (33) being situated with its midpoint (36) on a longitudinal position (T3) on a second line (L2) extending in the length direction at a second side (38) of the center line, and a transverse distance (Wt) between the first and second lines not larger than a diameter (D) of the tanks and the longitudinal position (T3) of the midpoint of the third tank (36)situated between the longitudinal positions of the midpoints of the first and second tanks.

WO 2018/115152 A1

[Continued on next page]

Published:
— *with international search report (Art. 21(3))*