
100
102
101
103
104
S
N
N
G
N
N
O

FIG. 1

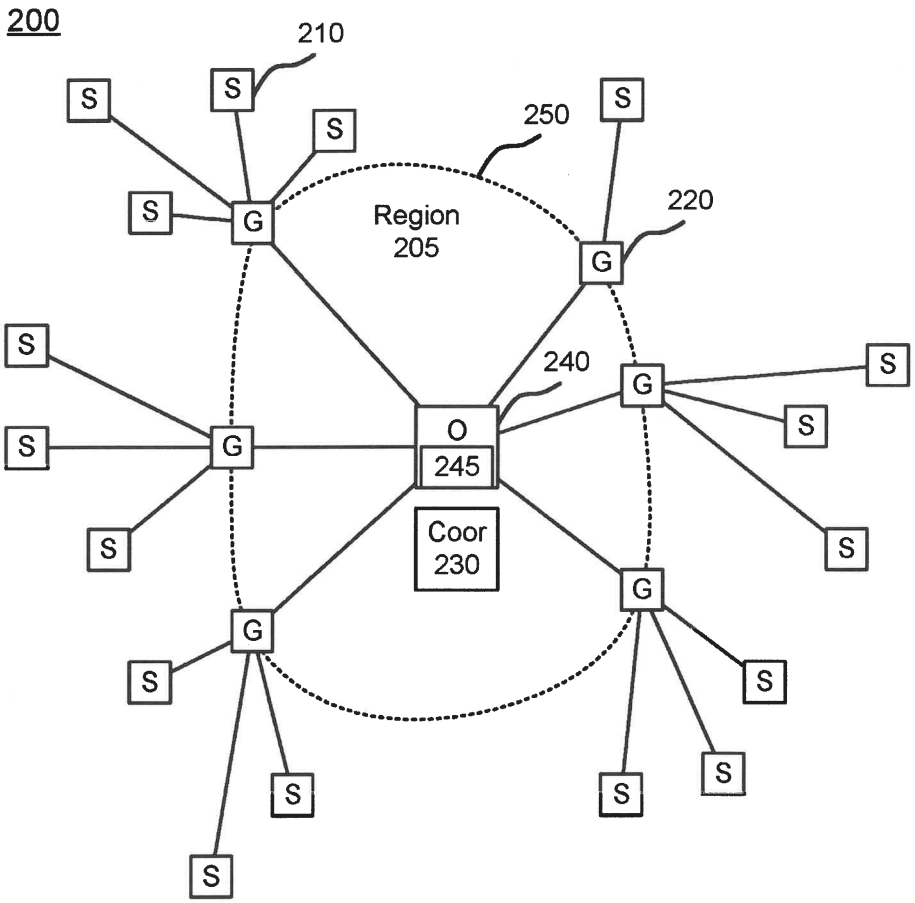
200
210
250
220
240
Region
205
O
245
Coor
230
S
G

FIG. 2

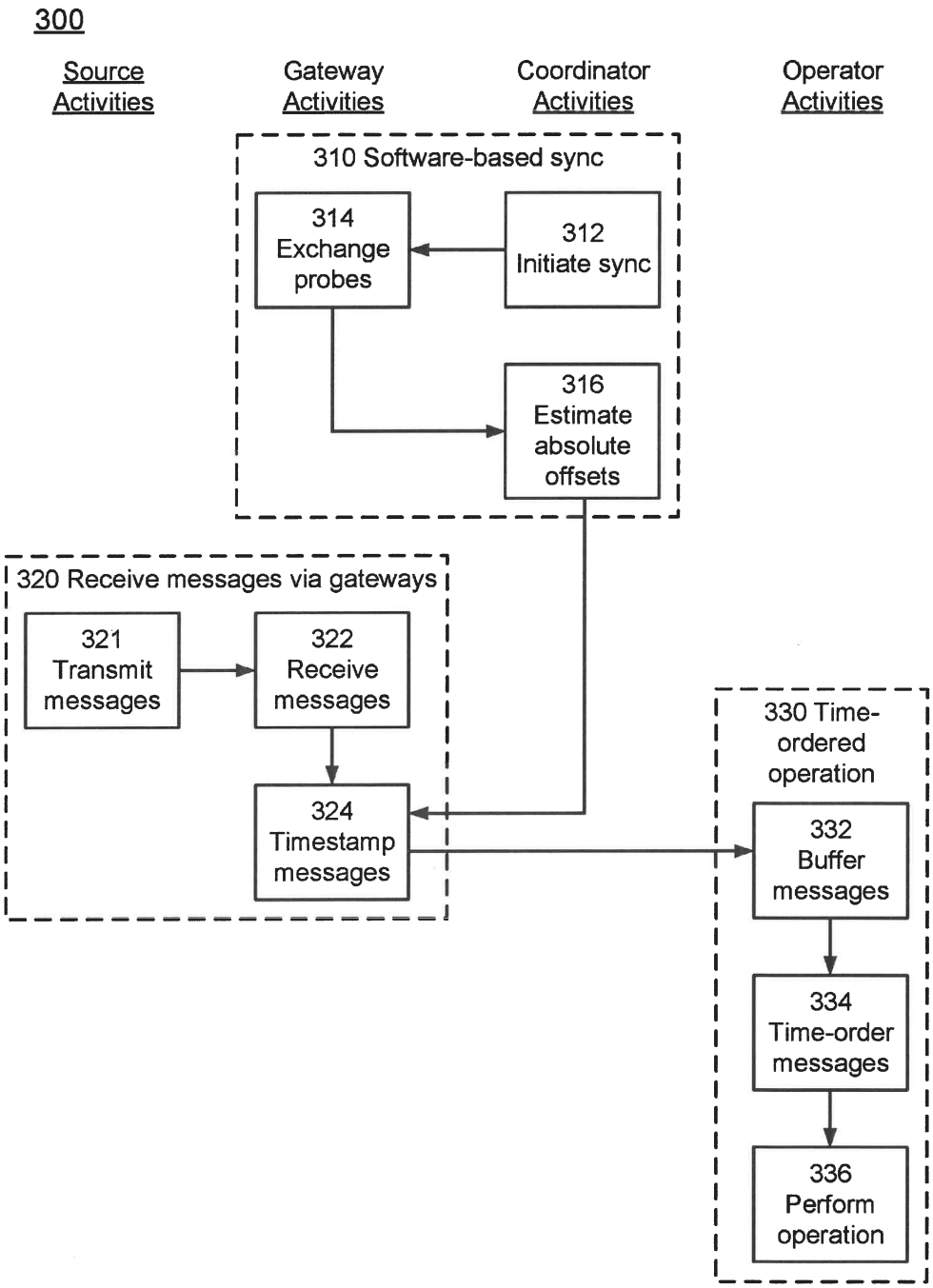
300
Source Activities
Gateway Activities
Coordinator Activities
Operator Activities
310 Software-based sync
314 Exchange probes
312 Initiate sync
316 Estimate absolute offsets
320 Receive messages via gateways
321 Transmit messages
322 Receive messages
324 Timestamp messages
330 Time-ordered operation
332 Buffer messages
334 Time-order messages
336 Perform operation

FIG. 3

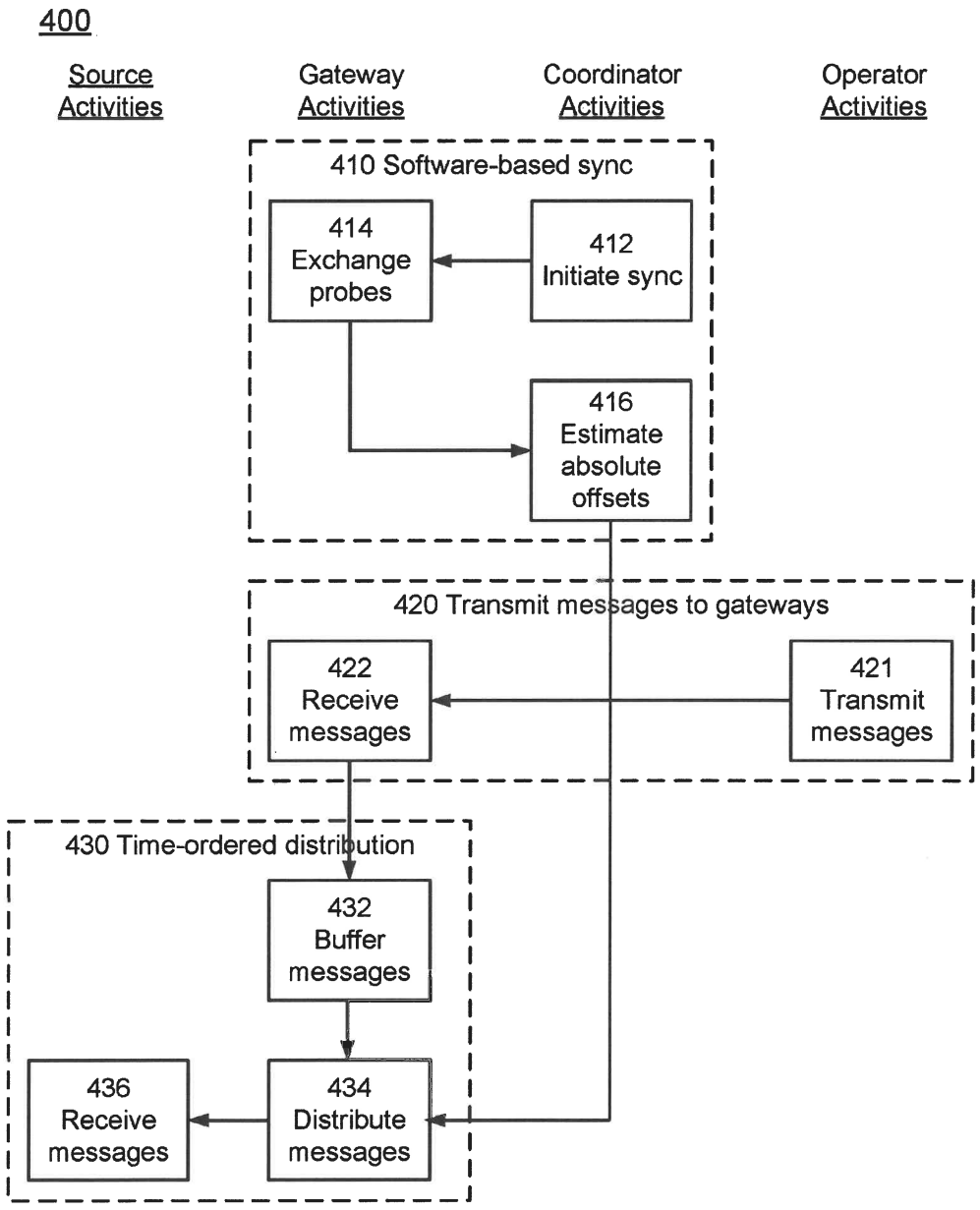
400
Source Activities
Gateway Activities
Coordinator Activities
Operator Activities
410 Software-based sync
414 Exchange probes
412 Initiate sync
416 Estimate absolute offsets
420 Transmit messages to gateways
422 Receive messages
421 Transmit messages
430 Time-ordered distribution
432 Buffer messages
436 Receive messages
434 Distribute messages

FIG. 4

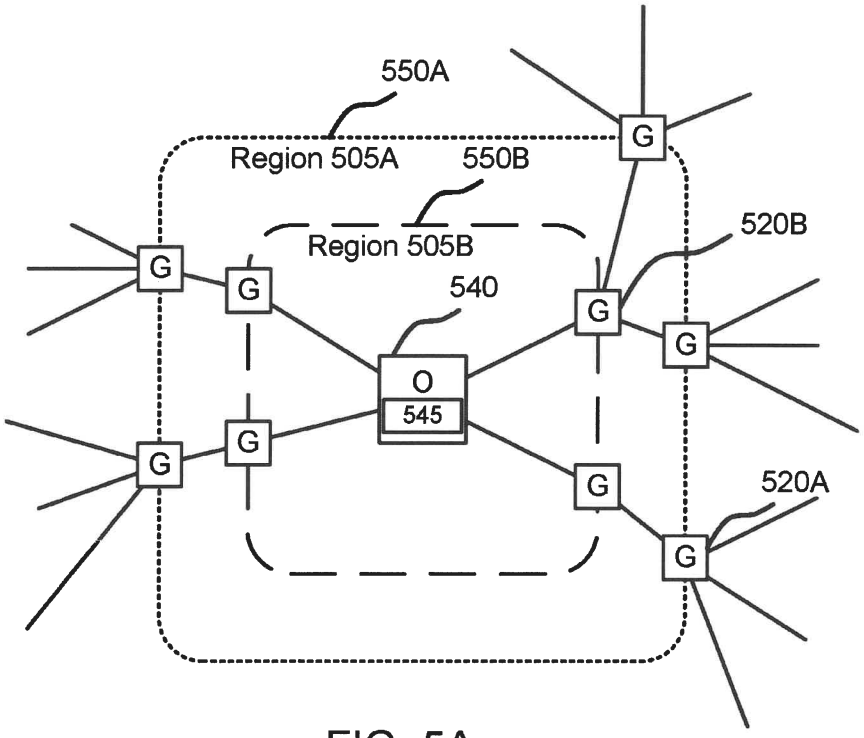


FIG. 5A

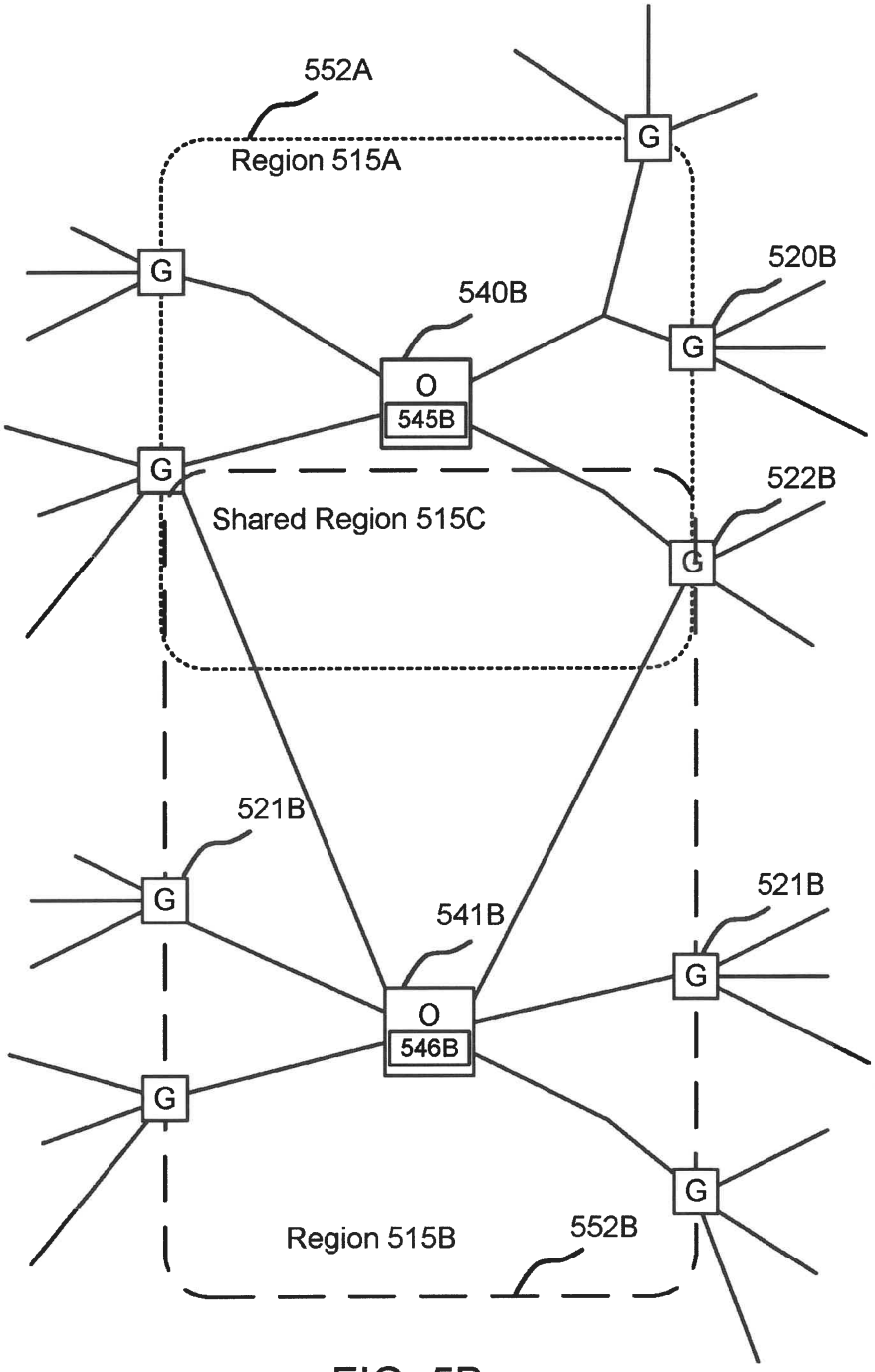
552A
Region 515A
G
520B
540B
O
545B
G
G
522B
Shared Region 515C
G
521B
G
541B
521B
O
546B
G
G
G
Region 515B
552B

FIG. 5B

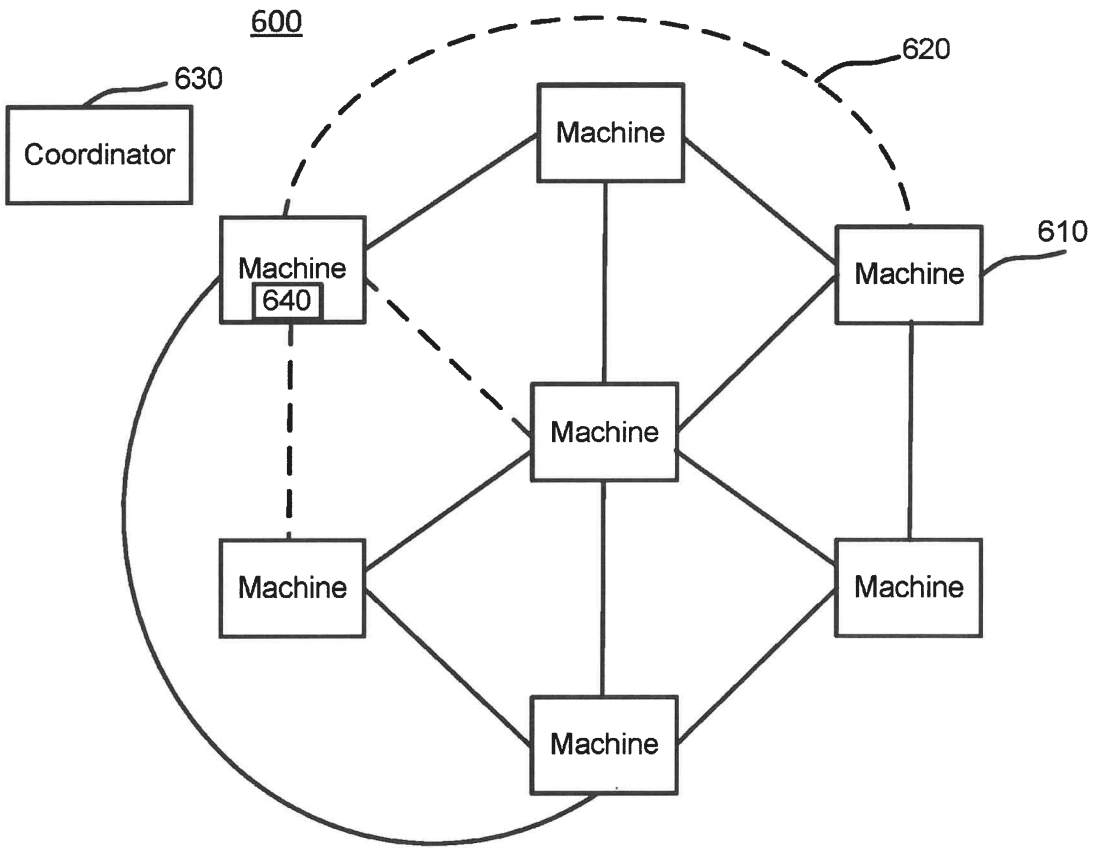
600
620
630
Coordinator
Machine
Machine
640
Machine
610
Machine
Machine
Machine
Machine

FIG. 6

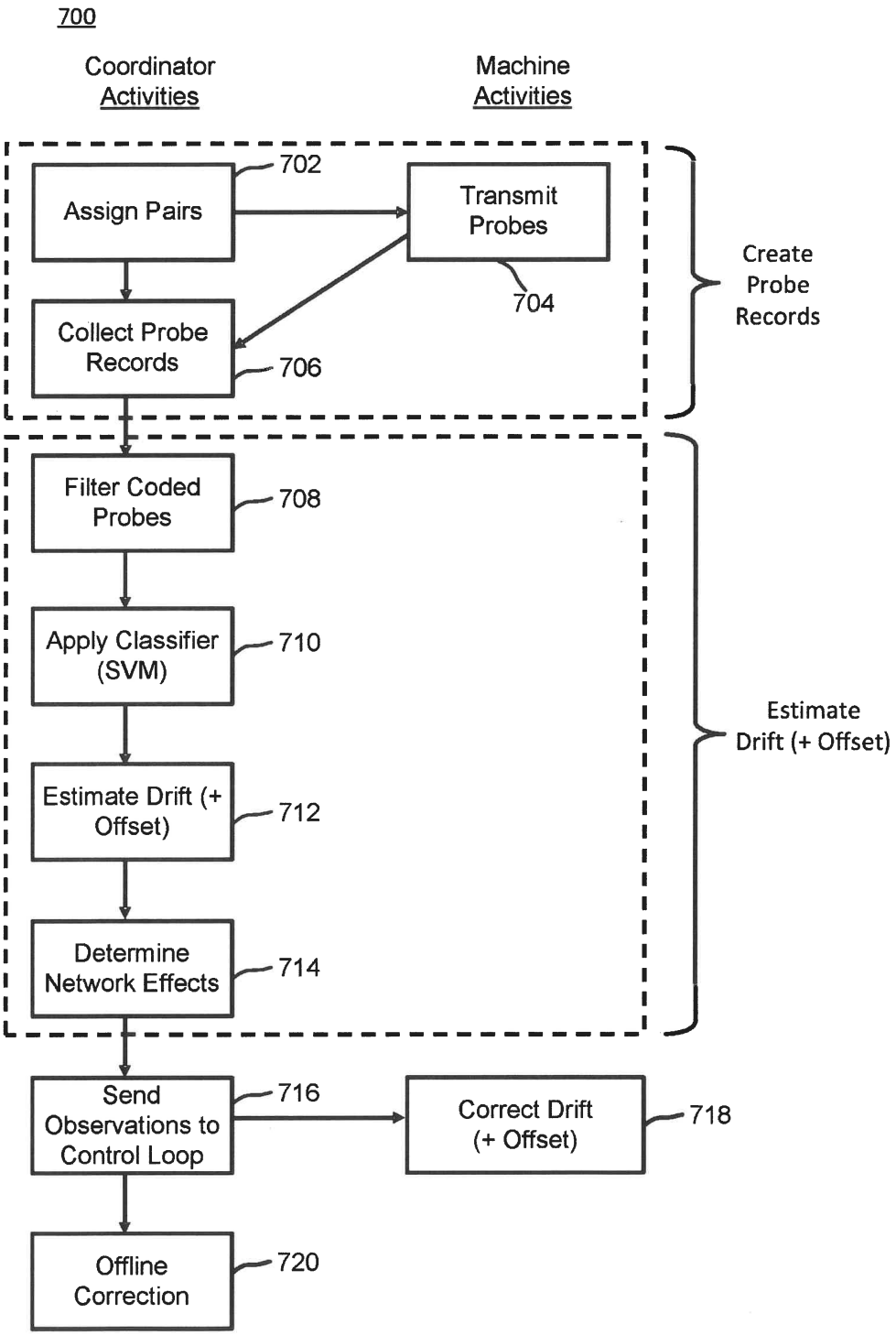
700
Coordinator Activities
Machine Activities
Assign Pairs
702
Transmit Probes
704
Collect Probe Records
706
Create Probe Records
Filter Coded Probes
708
Apply Classifier (SVM)
710
Estimate Drift (+ Offset)
712
Determine Network Effects
714
Estimate Drift (+ Offset)
Send Observations to Control Loop
716
Correct Drift (+ Offset)
718
Offline Correction
720

FIG. 7

800

| | 810 Probe ID | 820 Transmitting Node | 830 Receiving Node | 840 Transmit Time | 850 Receive Time |
|---|---|---|---|---|---|
| Reject | 1 | A | B | T1 | T1 + TT |
| | 2 | A | B | T1 + δ | T1 + δ + TT + D |
| Reject | 3 | A | B | T2 | T2 + TT + D |
| | 4 | A | B | T2 + δ | T2 + δ + TT |
| Coded Probe | 5 | A | B | T3 | T3 + TT |
| | 6 | A | B | T3 + δ | T3 + δ + TT |

δ = transmission time spacing
TT = transit time for one probe
D = Delay

FIG. 8

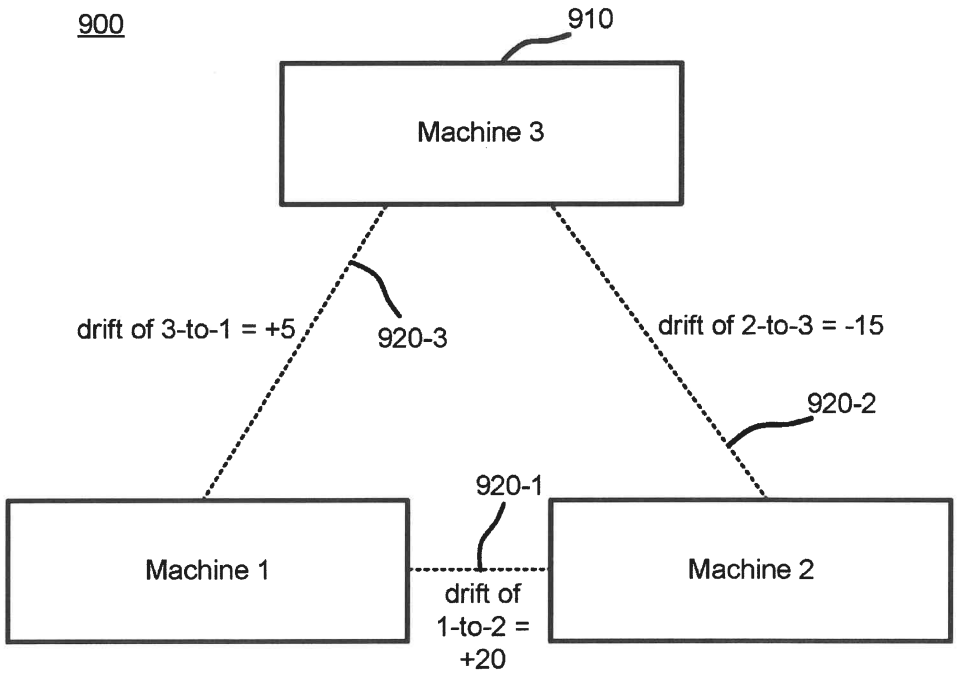
900
910
Machine 3
drift of 3-to-1 = +5
920-3
drift of 2-to-3 = -15
920-2
920-1
Machine 1
drift of
1-to-2 =
+20
Machine 2

FIG. 9

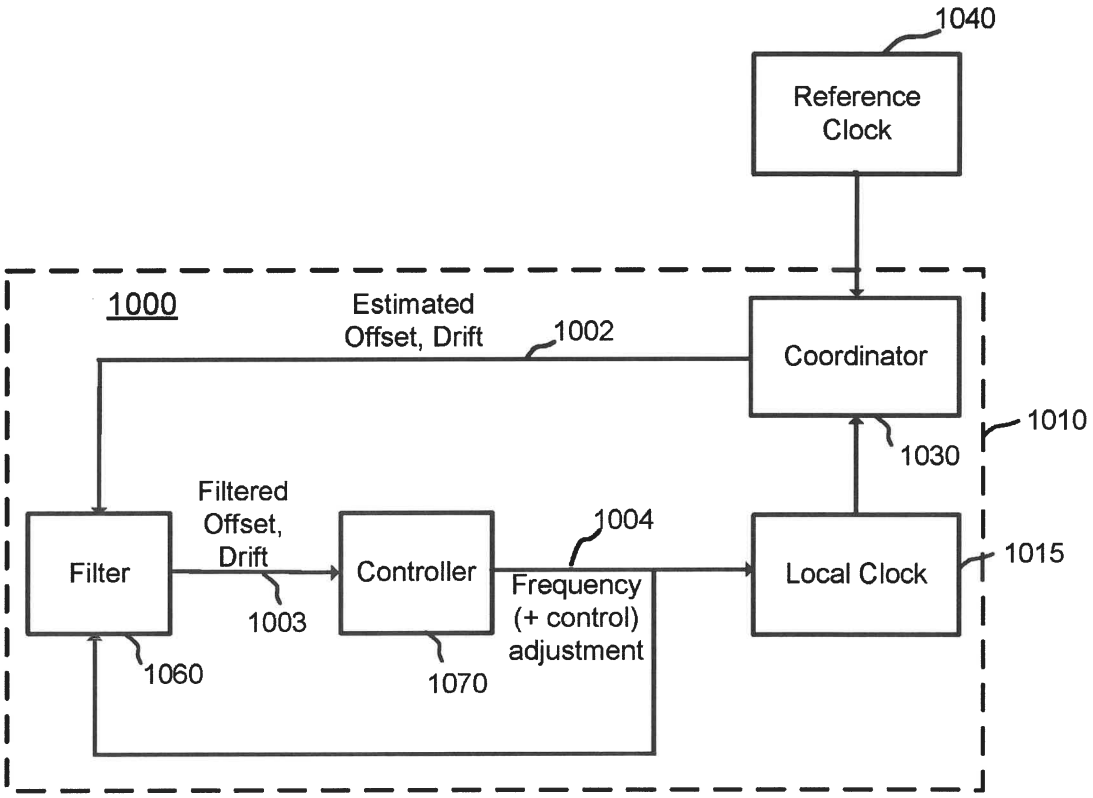
1040
Reference Clock
1000
Estimated Offset, Drift
1002
Coordinator
1010
1030
Filtered Offset, Drift
1004
Filter
Controller
Local Clock
1015
1003
Frequency (+ control) adjustment
1060
1070

FIG. 10

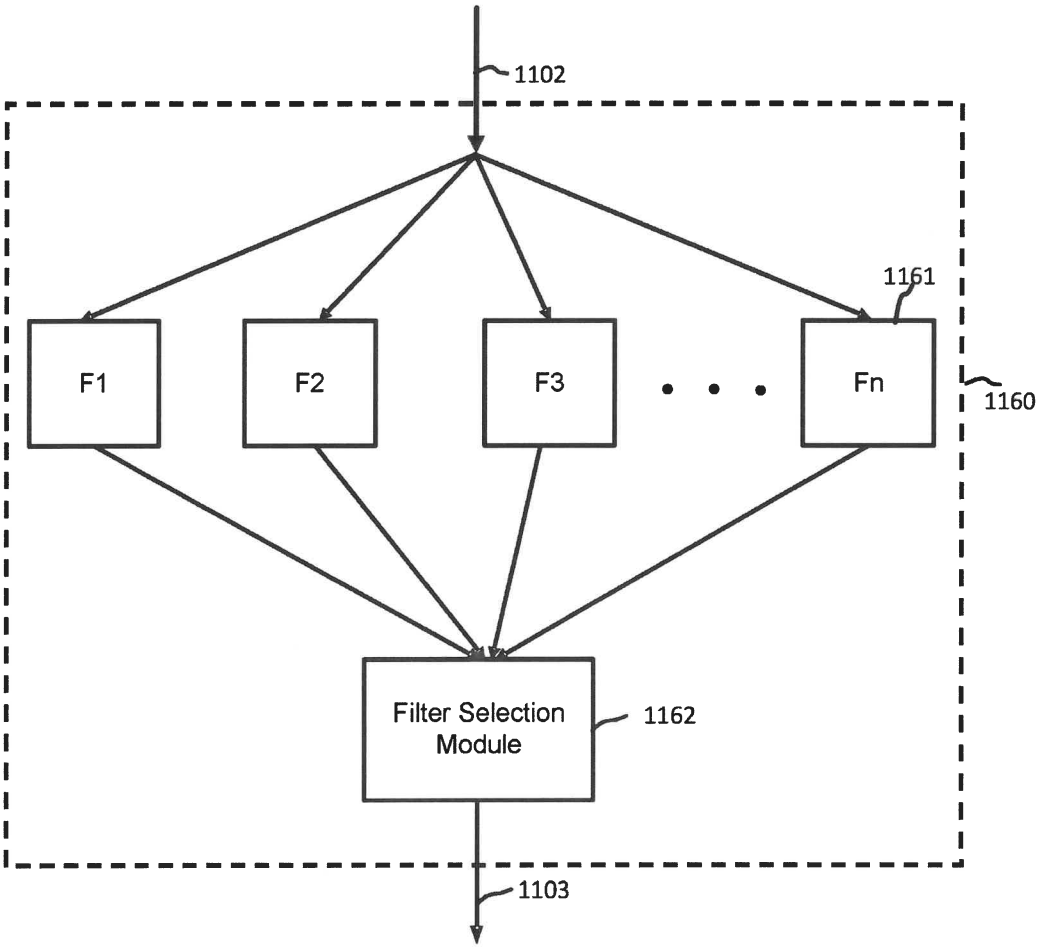


FIG. 11