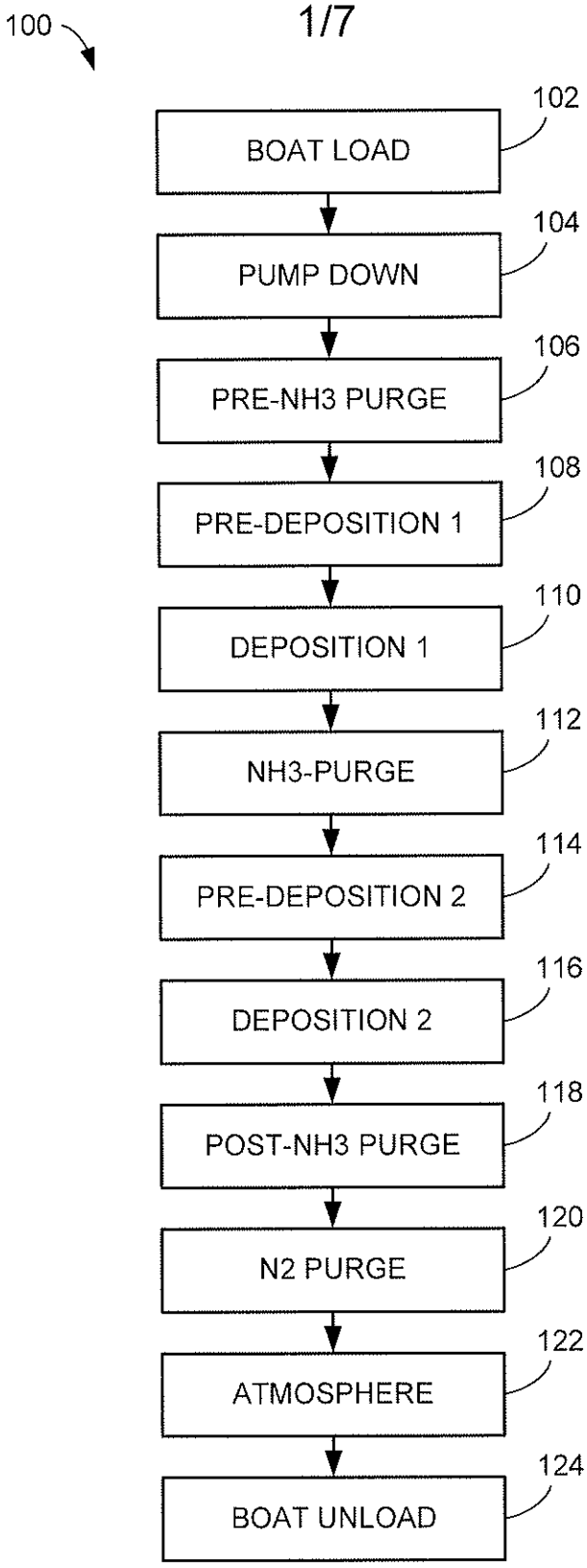
100
BOAT LOAD
102
PUMP DOWN
104
PRE-NH3 PURGE
106
PRE-DEPOSITION 1
108
DEPOSITION 1
110
NH3-PURGE
112
PRE-DEPOSITION 2
114
DEPOSITION 2
116
POST-NH3 PURGE
118
N2 PURGE
120
ATMOSPHERE
122
BOAT UNLOAD
124

FIG. 1

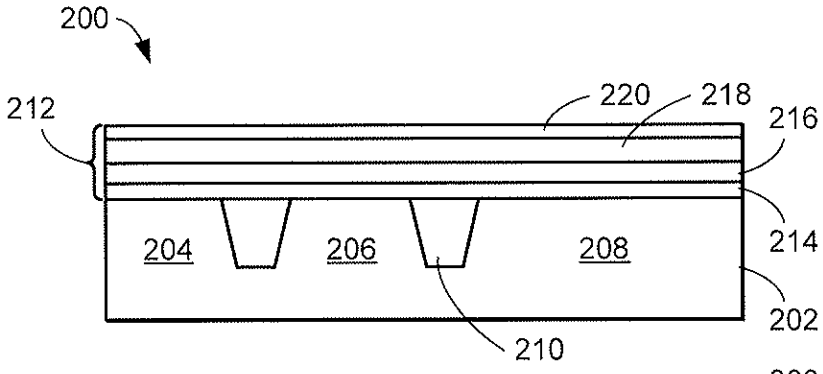

FIG. 2

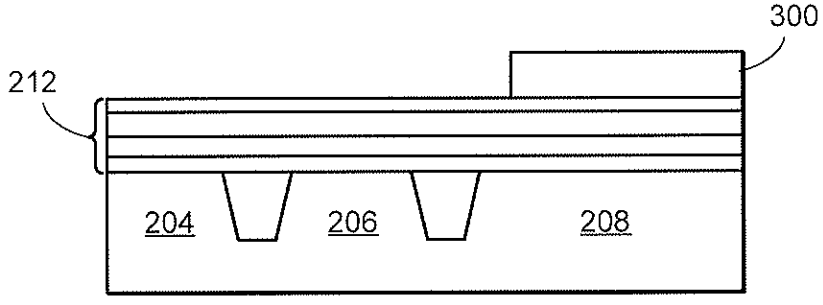

FIG. 3

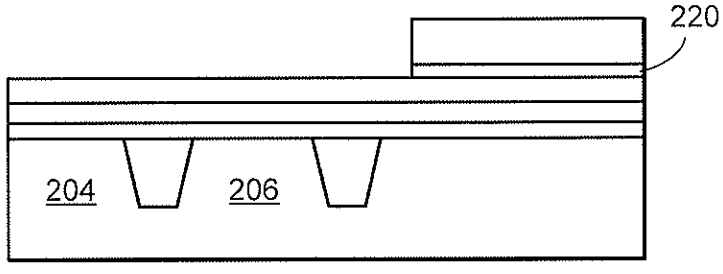

FIG. 4

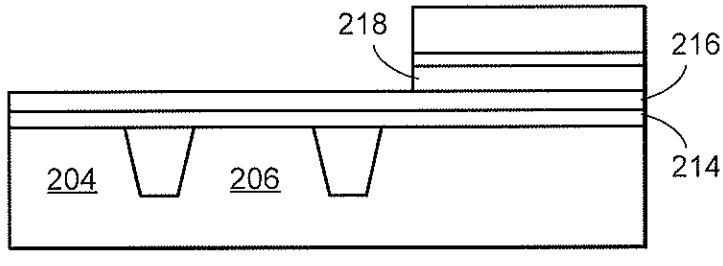

FIG. 5

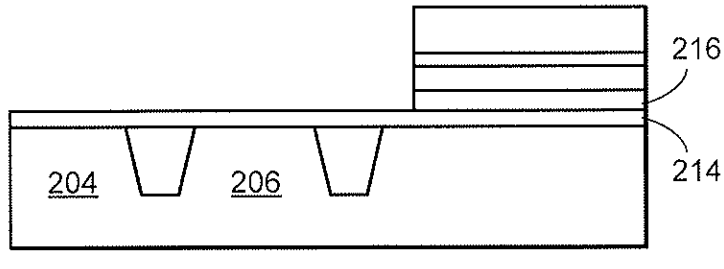

FIG. 6

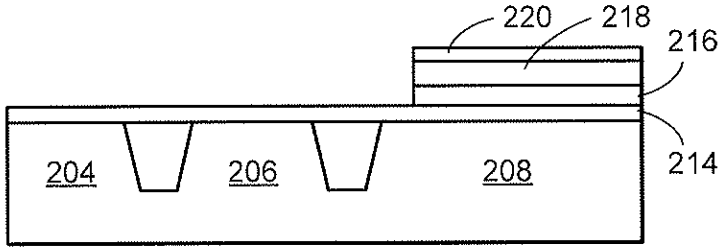

FIG. 7

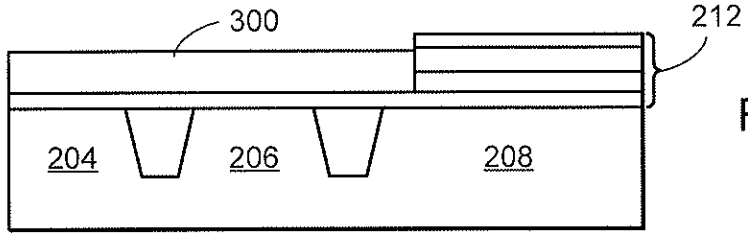

FIG. 8

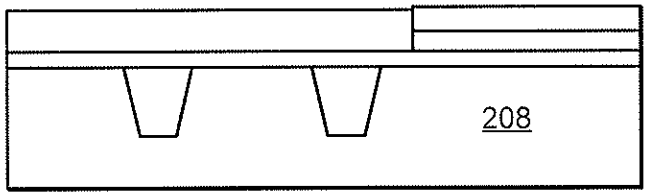

FIG. 9

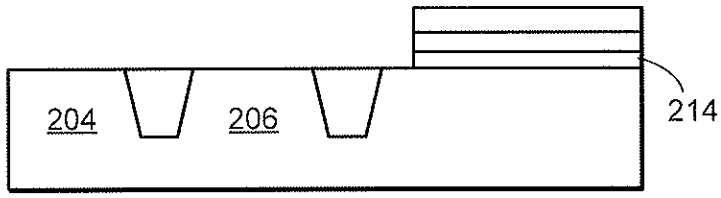

FIG. 10

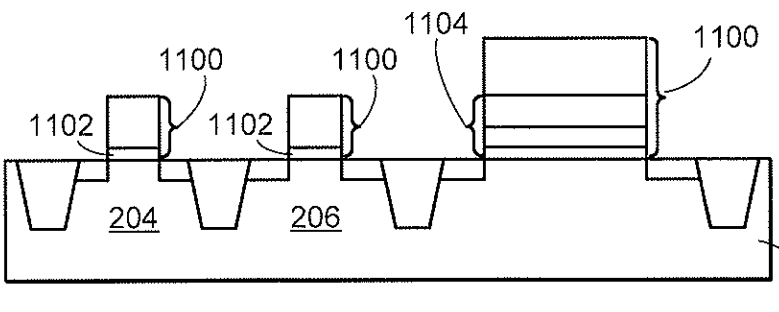

FIG. 11

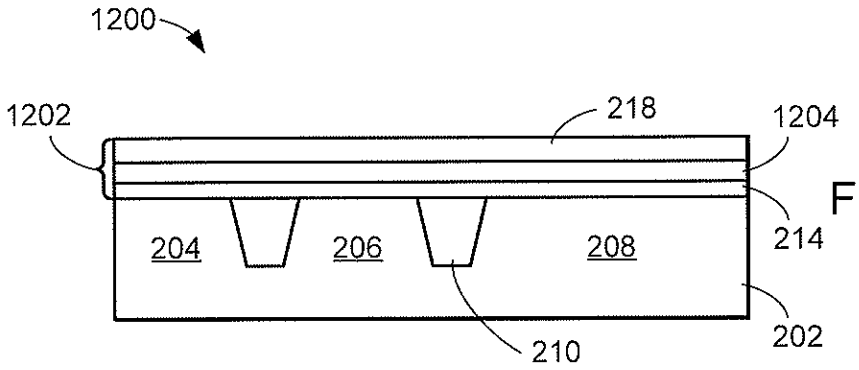

FIG. 12

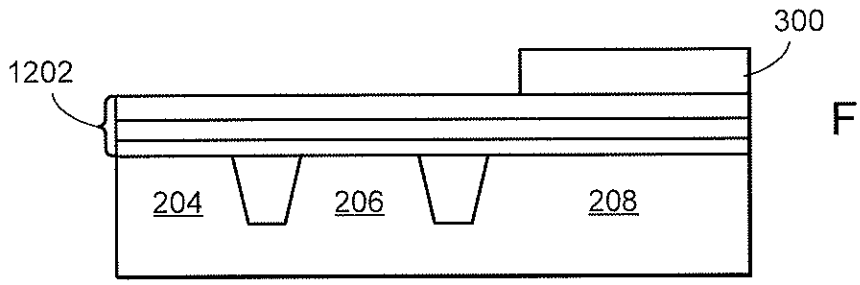

FIG. 13

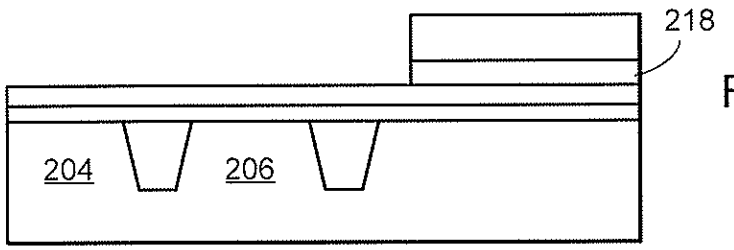

FIG. 14

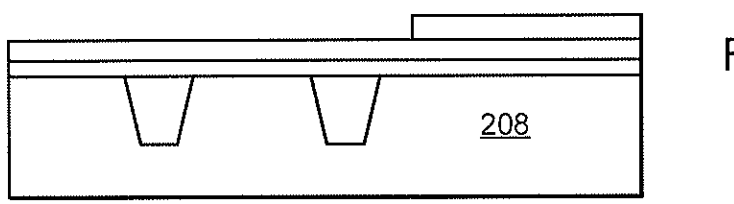

FIG. 15

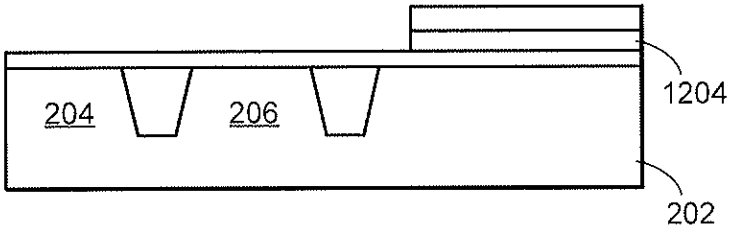

FIG. 16

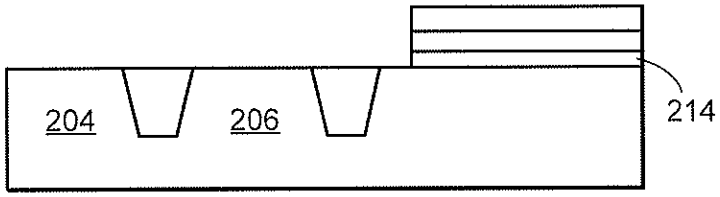

FIG. 17

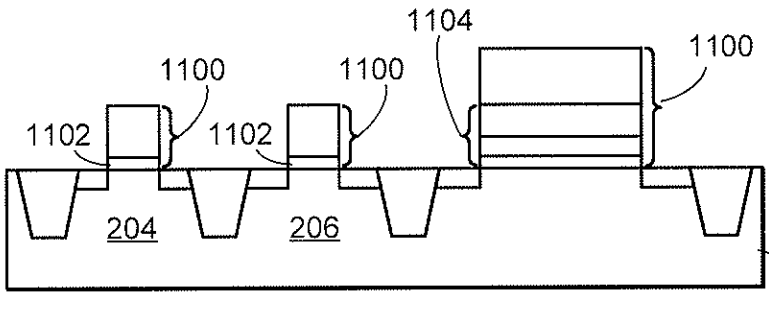

FIG. 18

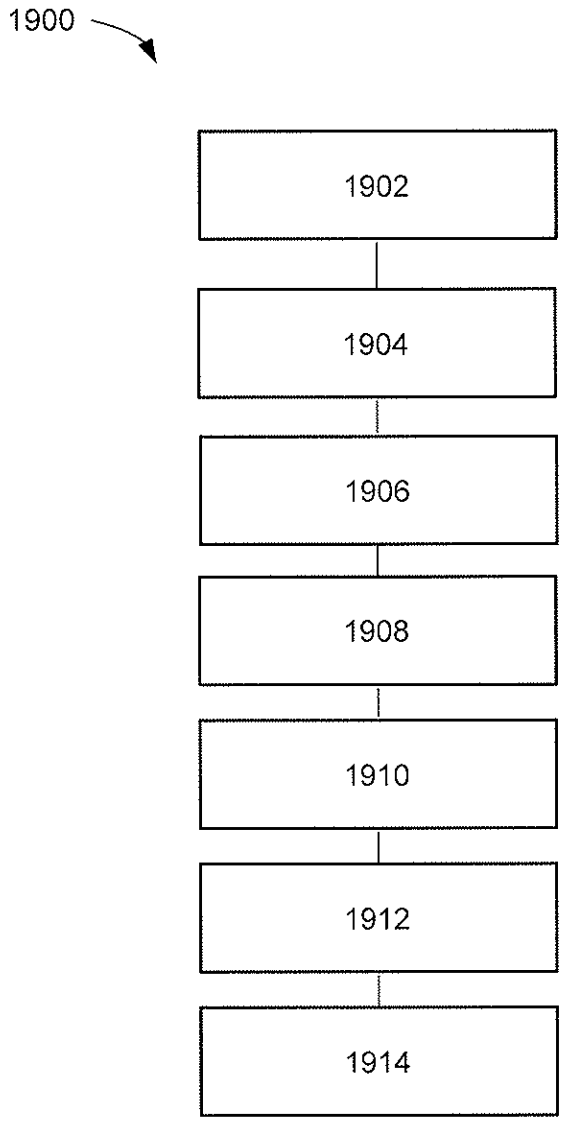

FIG. 19

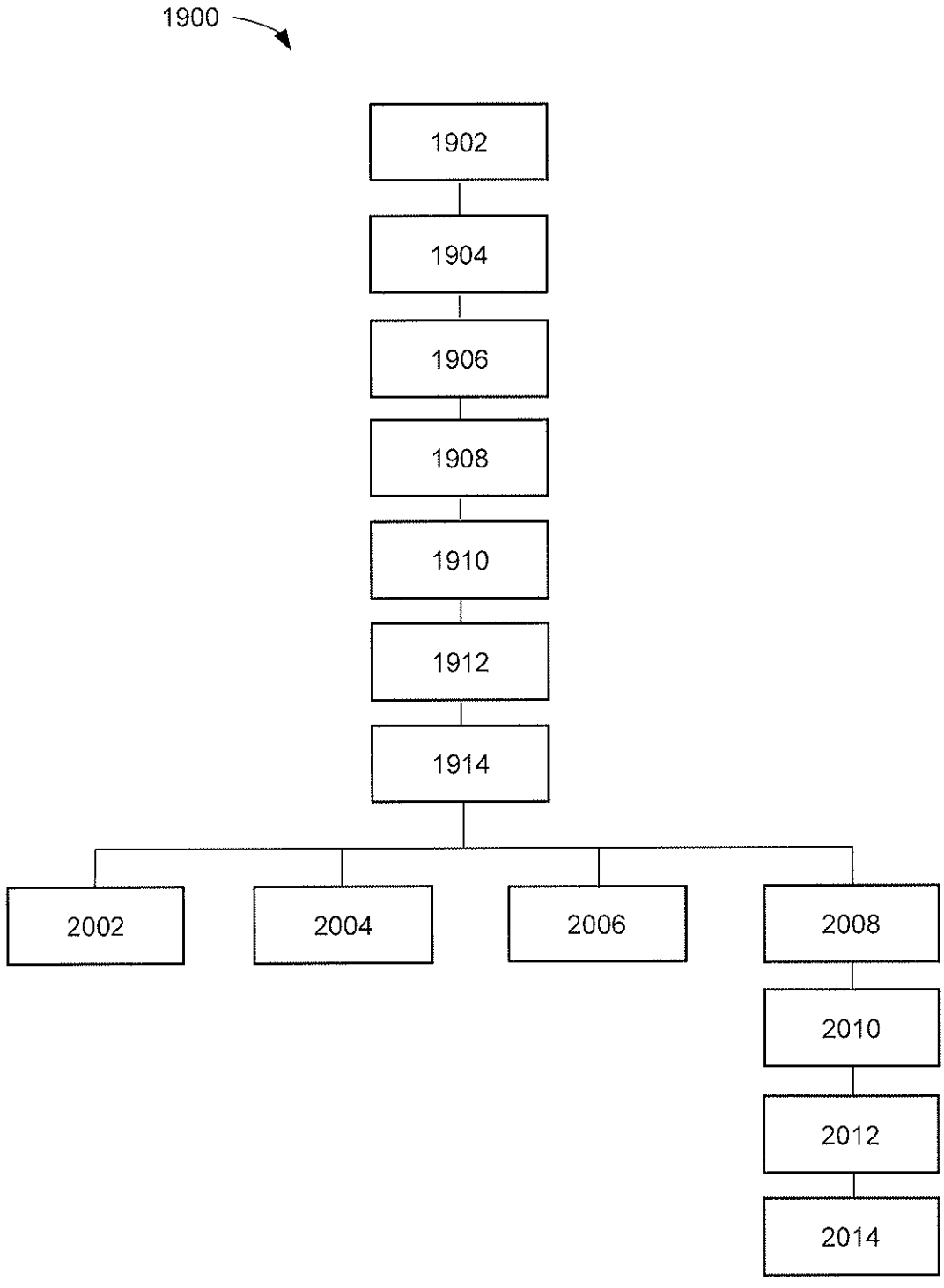
1900
1902
1904
1906
1908
1910
1912
1914
2002
2004
2006
2008
2010
2012
2014

FIG. 20