(12) INTERNATIONAL APPLICATION PUBLISHED UNDER THE PATENT COOPERATION TREATY (PCT)

(19) World Intellectual Property Organization
International Bureau

(43) International Publication Date
14 December 2000 (14.12.2000)

PCT

(10) International Publication Number
WO 00/74657 A1

(51) International Patent Classification[7]: A61K 9/50, C23C 14/28

(21) International Application Number: PCT/US00/15547

(22) International Filing Date: 6 June 2000 (06.06.2000)

(25) Filing Language: English

(26) Publication Language: English

(30) Priority Data:
60/138,006 7 June 1999 (07.06.1999) US
60/137,733 7 June 1999 (07.06.1999) US

(71) Applicant and
(72) Inventor: TALTON, James, D. [US/US]; 4101 N.W. 21st Terrace, Gainesville, FL 32605 (US).

(74) Agents: GARRETT, Arthur, S. et al.; Finnegan, Henderson, Farabow, Garrett & Dunner, L.L.P., 1300 I Street, N.W., Washington, DC 20005-3315 (US).

(81) Designated States *(national)*: AE, AG, AL, AM, AT, AU, AZ, BA, BB, BG, BR, BY, CA, CH, CN, CR, CU, CZ, DE, DK, DM, DZ, EE, ES, FI, GB, GD, GE, GH, GM, HR, HU, ID, IL, IN, IS, JP, KE, KG, KP, KR, KZ, LC, LK, LR, LS, LT, LU, LV, MA, MD, MG, MK, MN, MW, MX, MZ, NO, NZ, PL, PT, RO, RU, SD, SE, SG, SI, SK, SL, TJ, TM, TR, TT, TZ, UA, UG, US, UZ, VN, YU, ZA, ZW.

(84) Designated States *(regional)*: ARIPO patent (GH, GM, KE, LS, MW, MZ, SD, SL, SZ, TZ, UG, ZW), Eurasian patent (AM, AZ, BY, KG, KZ, MD, RU, TJ, TM), European patent (AT, BE, CH, CY, DE, DK, ES, FI, FR, GB, GR, IE, IT, LU, MC, NL, PT, SE), OAPI patent (BF, BJ, CF, CG, CI, CM, GA, GN, GW, ML, MR, NE, SN, TD, TG).

[Continued on next page]

(54) Title: METHODS FOR COATING PARTICLES AND PARTICLES PRODUCED THEREBY

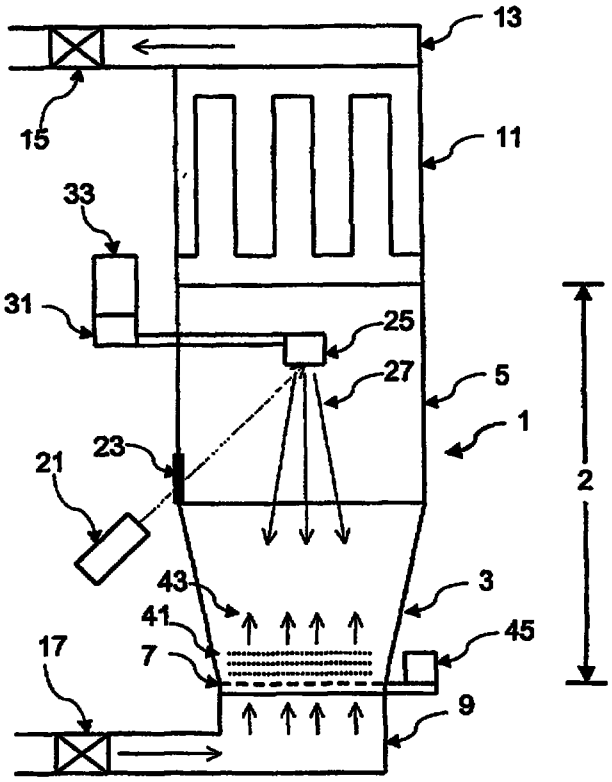

(57) Abstract: Methods of coating core materials by providing target materials and core materials; ablating the target materials to form ablated particulate target materials; and coating the core materials with said ablated particulate target materials; wherein the method is performed at a pressure of about 10 Torr or higher. Methods of coating particles with nanometer to multiple nanometer thick coatings in atmospheric pressure, and using pneumatic fluidization, are also provided.

WO 00/74657 A1

Published:
— *With international search report.*
— *Before the expiration of the time limit for amending the claims and to be republished in the event of receipt of amendments.*

For two-letter codes and other abbreviations, refer to the "Guidance Notes on Codes and Abbreviations" appearing at the beginning of each regular issue of the PCT Gazette.