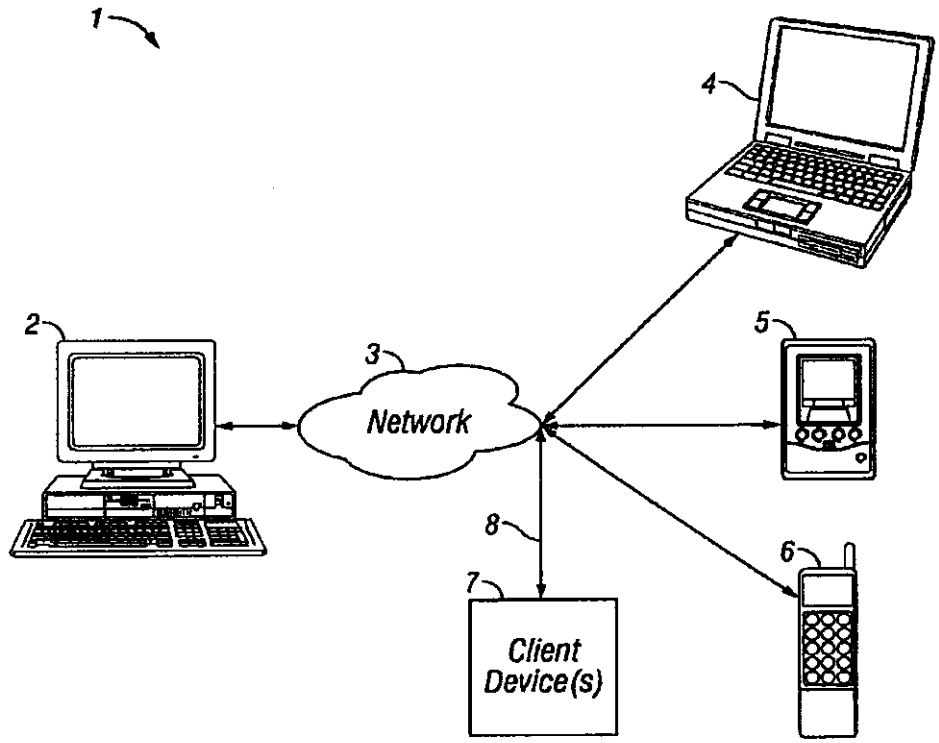


FIG. 1

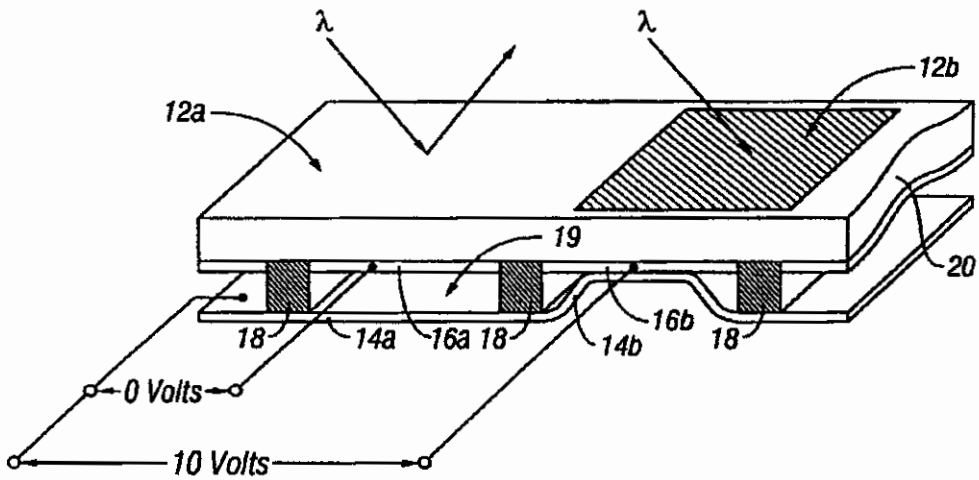


FIG. 2

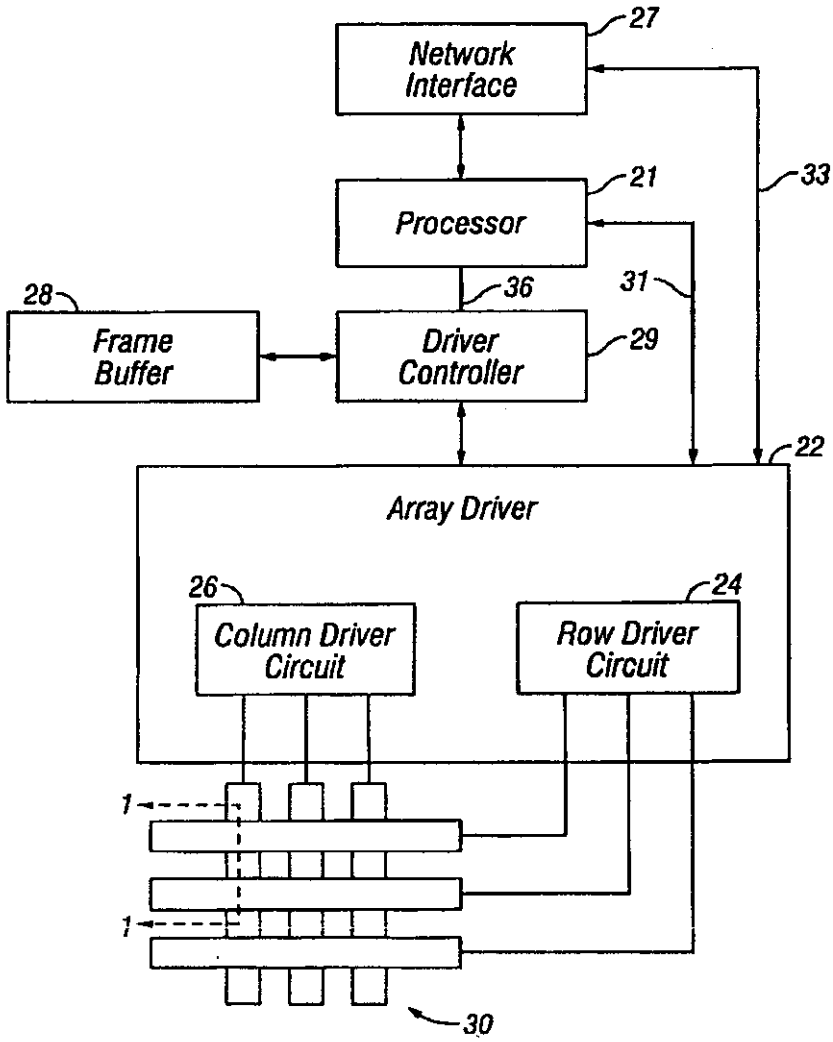
Network Interface
27
Processor
21
33
28
Frame Buffer
36
31
Driver Controller
29
22
Array Driver
26
Column Driver Circuit
24
Row Driver Circuit
1
1
30

FIG. 3A

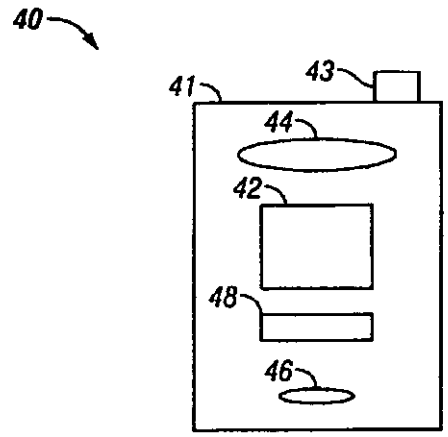
40
41
43
44
42
48
46

FIG. 3B

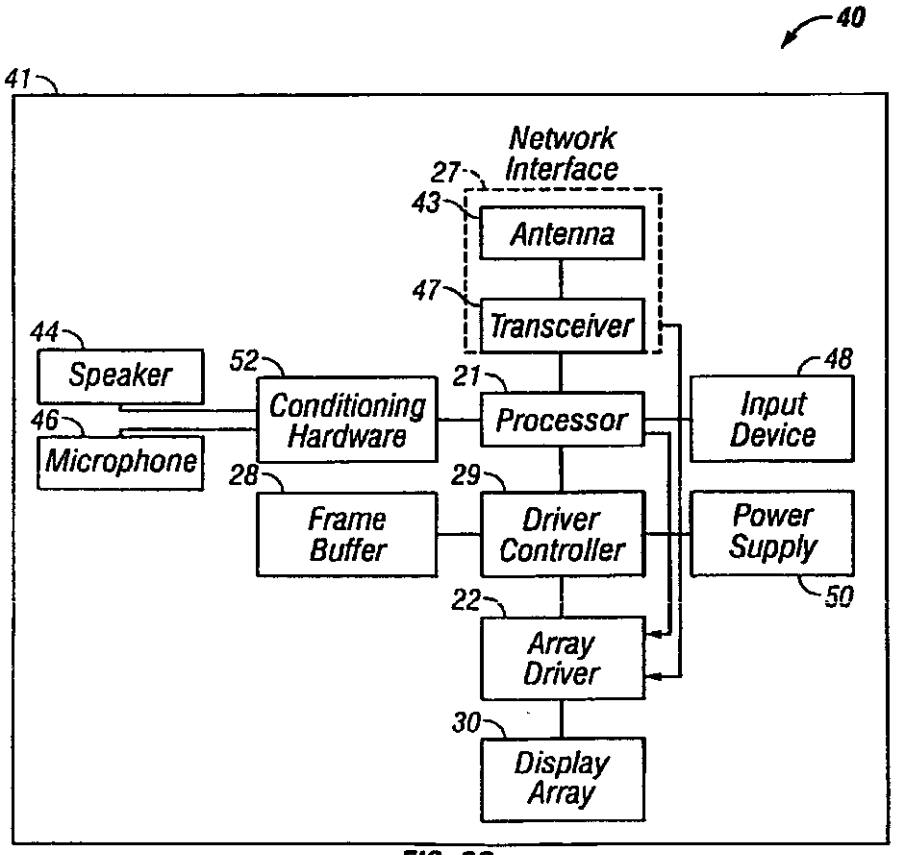
40
41
Network Interface
27
43
Antenna
47
Transceiver
44
Speaker
52
Conditioning Hardware
21
Processor
48
Input Device
46
Microphone
28
Frame Buffer
29
Driver Controller
Power Supply
50
22
Array Driver
30
Display Array

FIG. 3C

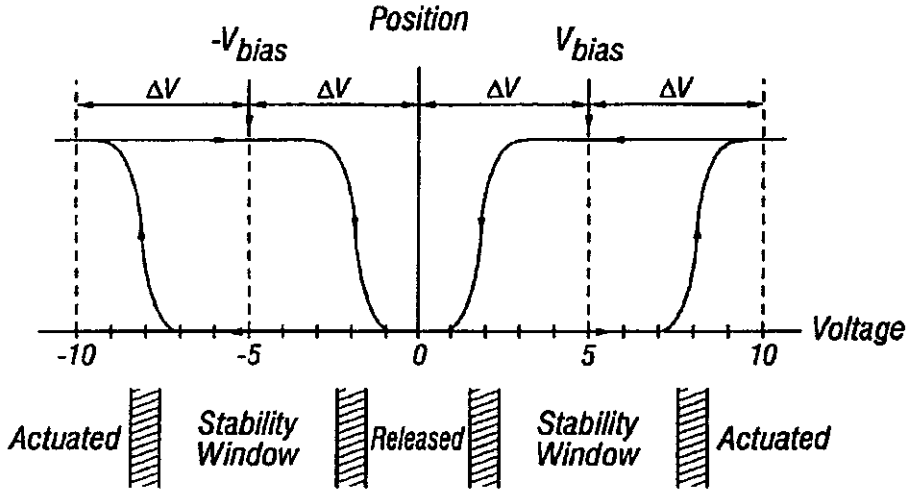


FIG. 4A

| Row Output Signals | Column Output Signals: $+V_{bias}$ | Column Output Signals: $-V_{bias}$ |
|---|---|---|
| 0 | Stable | Stable |
| $+\Delta V$ | Release | Actuate |
| $-\Delta V$ | Actuate | Release |

FIG. 4B

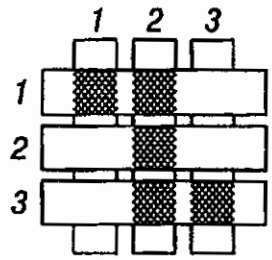
1
2
3
1
2
3

FIG. 5A

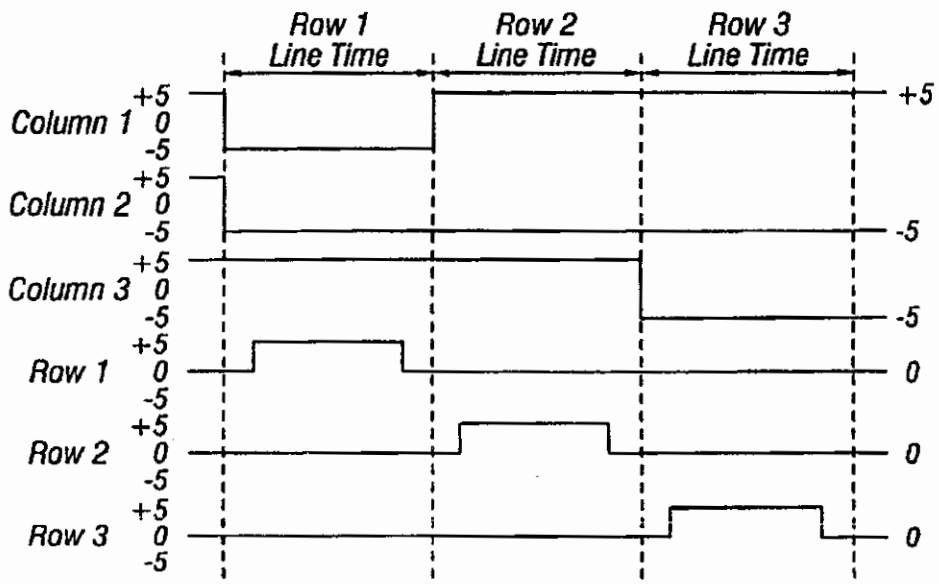
Row 1 Line Time
Row 2 Line Time
Row 3 Line Time
Column 1
Column 2
Column 3
Row 1
Row 2
Row 3
+5
0
-5
+5
-5
-5
0
0
0

FIG. 5B

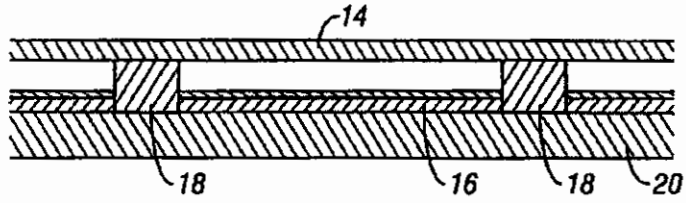


FIG. 6A

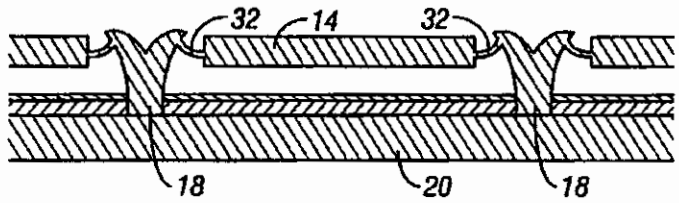


FIG. 6B

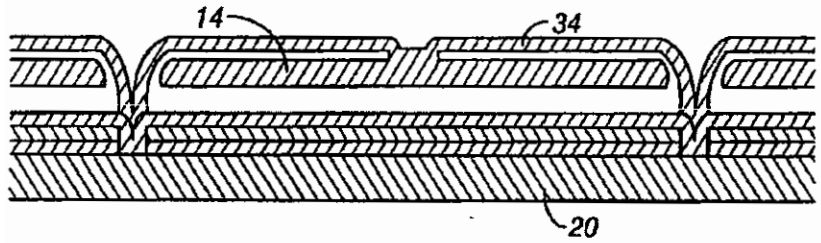


FIG. 6C

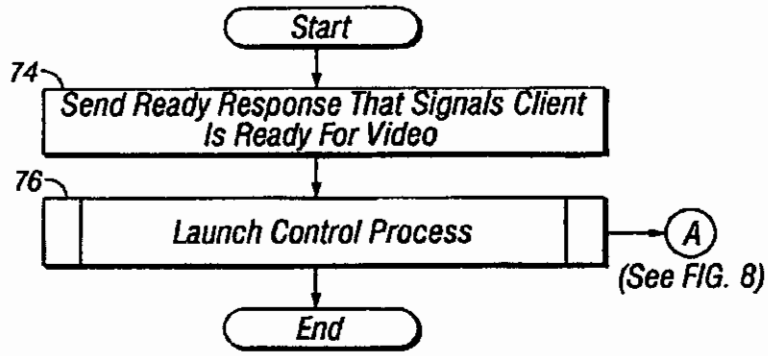
Start
74
Send Ready Response That Signals Client Is Ready For Video
76
Launch Control Process
A
(See FIG. 8)
End

FIG. 7

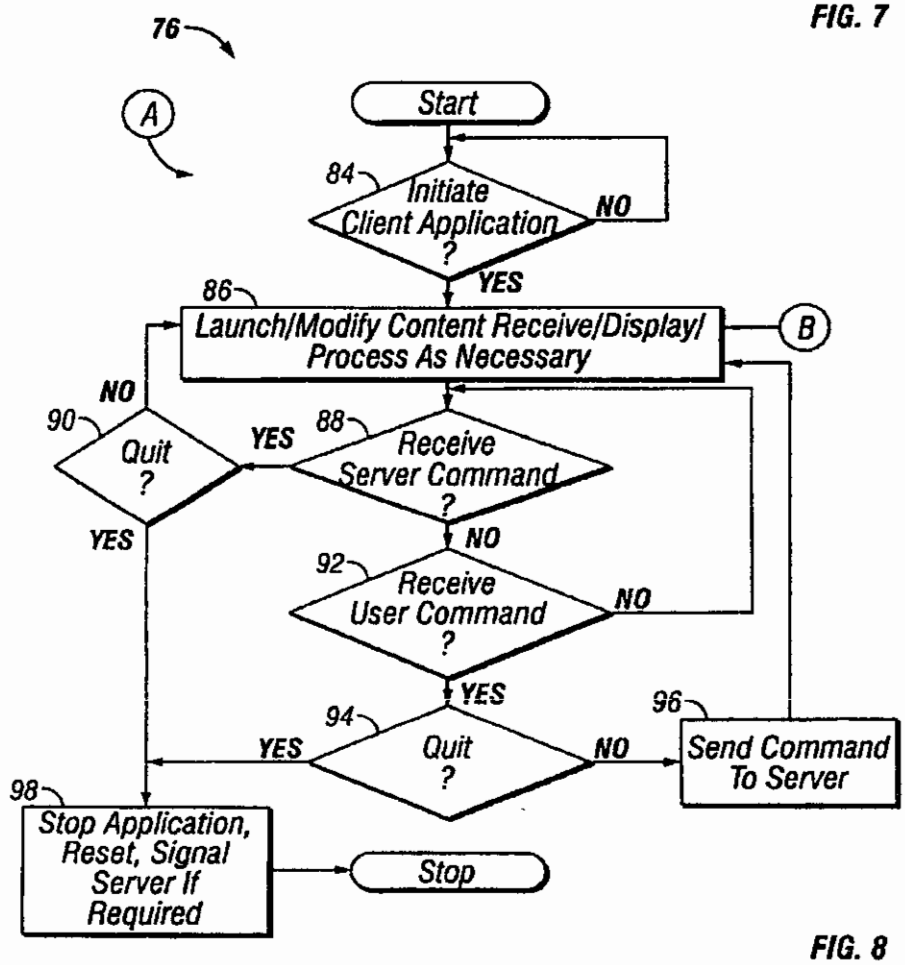
76
A
Start
84
Initiate Client Application ?
NO
YES
86
Launch/Modify Content Receive/Display/ Process As Necessary
B
NO
90
Quit ?
YES
88
Receive Server Command ?
YES
NO
92
Receive User Command ?
NO
YES
94
Quit ?
YES
NO
96
Send Command To Server
98
Stop Application, Reset, Signal Server If Required
Stop

FIG. 8

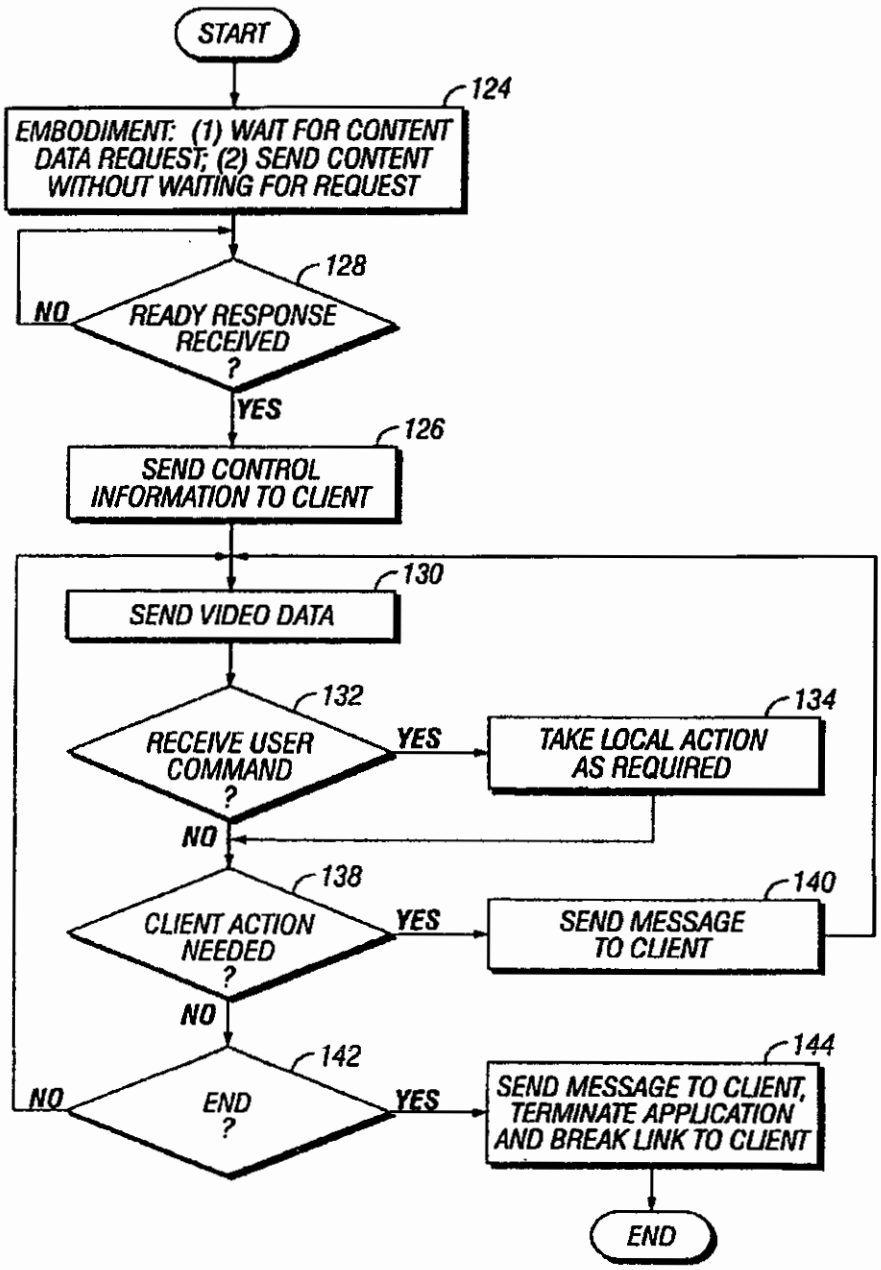
START
124
EMBODIMENT: (1) WAIT FOR CONTENT DATA REQUEST; (2) SEND CONTENT WITHOUT WAITING FOR REQUEST
128
NO
READY RESPONSE RECEIVED ?
YES
126
SEND CONTROL INFORMATION TO CLIENT
130
SEND VIDEO DATA
132
RECEIVE USER COMMAND ?
YES
134
TAKE LOCAL ACTION AS REQUIRED
NO
138
CLIENT ACTION NEEDED ?
YES
140
SEND MESSAGE TO CLIENT
NO
142
NO
END ?
YES
144
SEND MESSAGE TO CLIENT, TERMINATE APPLICATION AND BREAK LINK TO CLIENT
END

FIG. 9

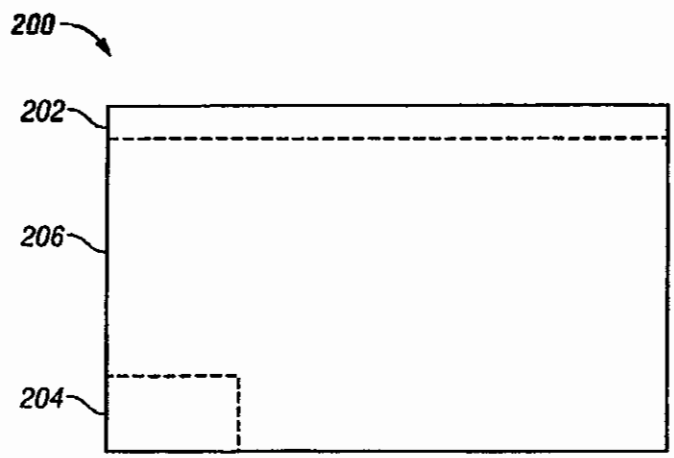


FIG. 10

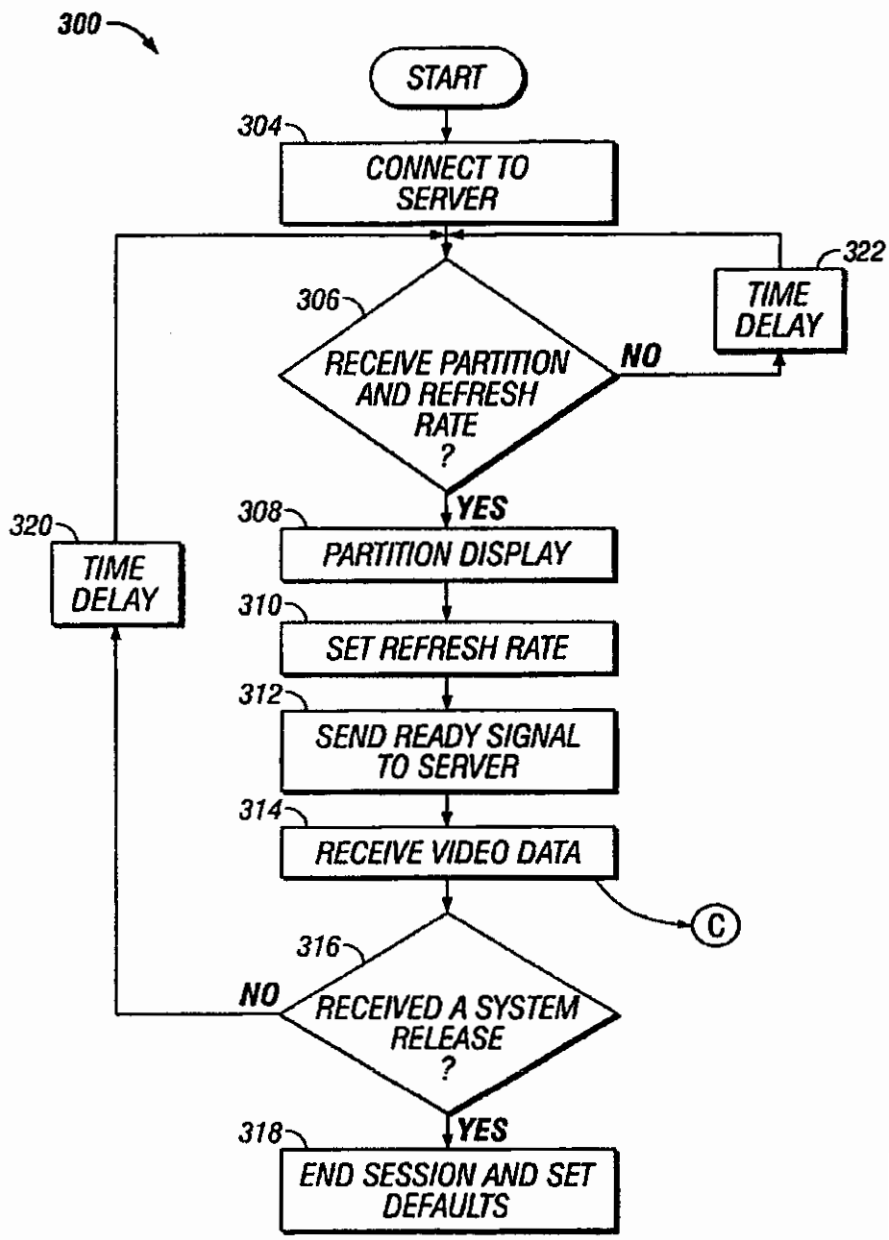
300
START
304
CONNECT TO SERVER
306
RECEIVE PARTITION AND REFRESH RATE ?
NO
322
TIME DELAY
YES
308
PARTITION DISPLAY
310
SET REFRESH RATE
312
SEND READY SIGNAL TO SERVER
314
RECEIVE VIDEO DATA
C
316
RECEIVED A SYSTEM RELEASE ?
NO
320
TIME DELAY
YES
318
END SESSION AND SET DEFAULTS

FIG. 11

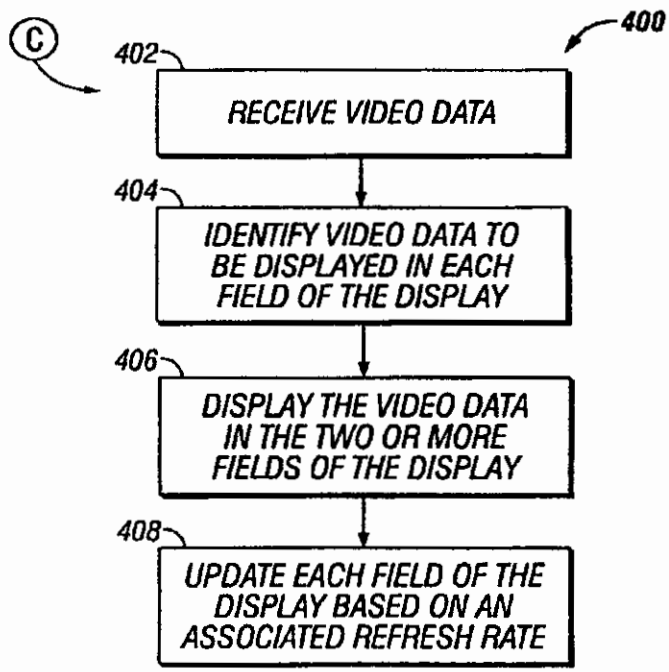
C
400
402
RECEIVE VIDEO DATA
404
IDENTIFY VIDEO DATA TO BE DISPLAYED IN EACH FIELD OF THE DISPLAY
406
DISPLAY THE VIDEO DATA IN THE TWO OR MORE FIELDS OF THE DISPLAY
408
UPDATE EACH FIELD OF THE DISPLAY BASED ON AN ASSOCIATED REFRESH RATE

FIG. 12

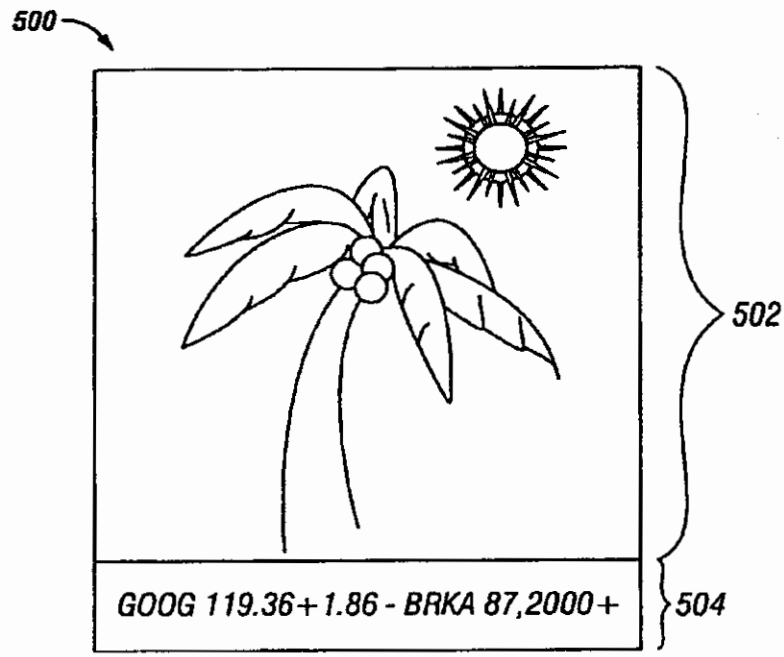
500
502
GOOG 119.36+1.86 - BRKA 87,2000+
504

FIG. 13

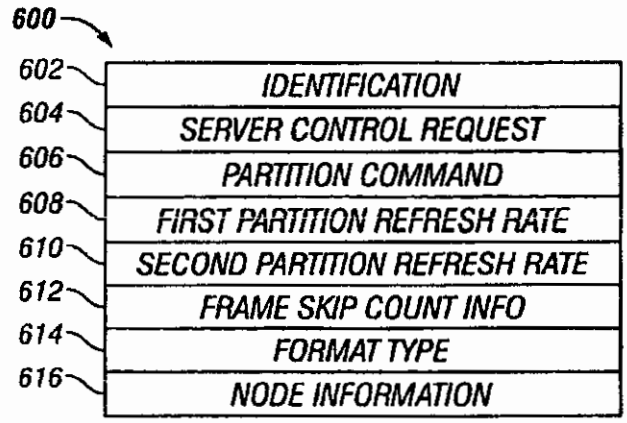
600
602
IDENTIFICATION
604
SERVER CONTROL REQUEST
606
PARTITION COMMAND
608
FIRST PARTITION REFRESH RATE
610
SECOND PARTITION REFRESH RATE
612
FRAME SKIP COUNT INFO
614
FORMAT TYPE
616
NODE INFORMATION

FIG. 14

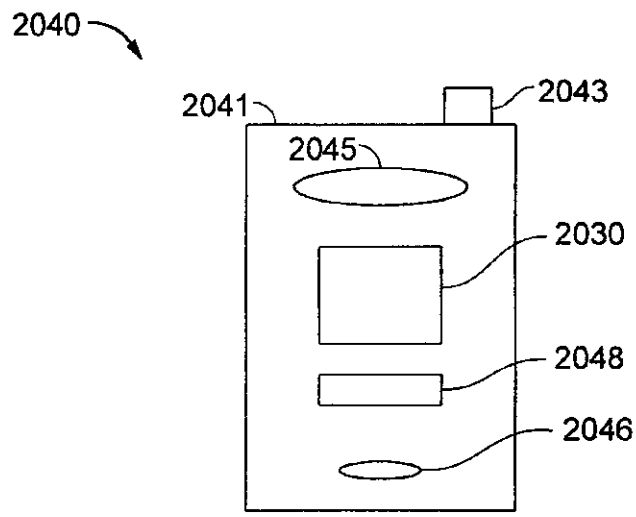


FIG. 15A

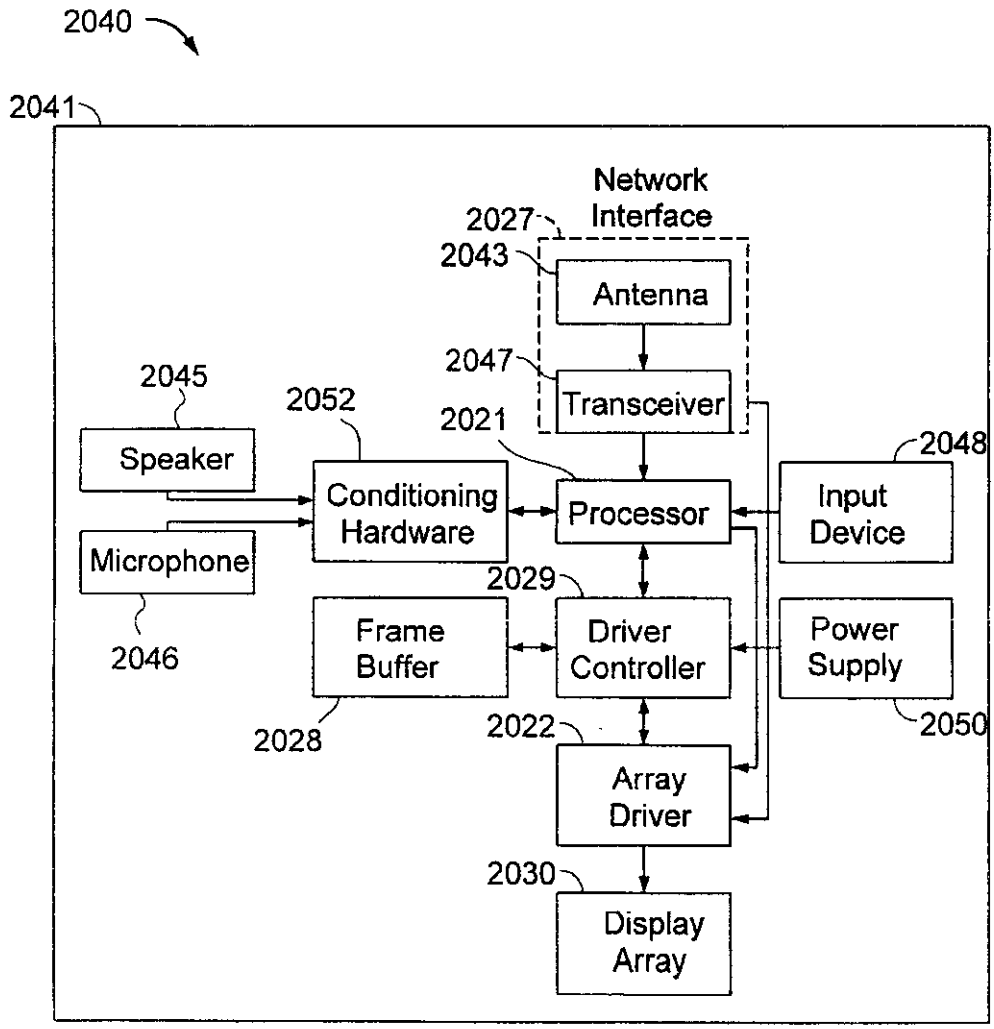


FIG. 15B