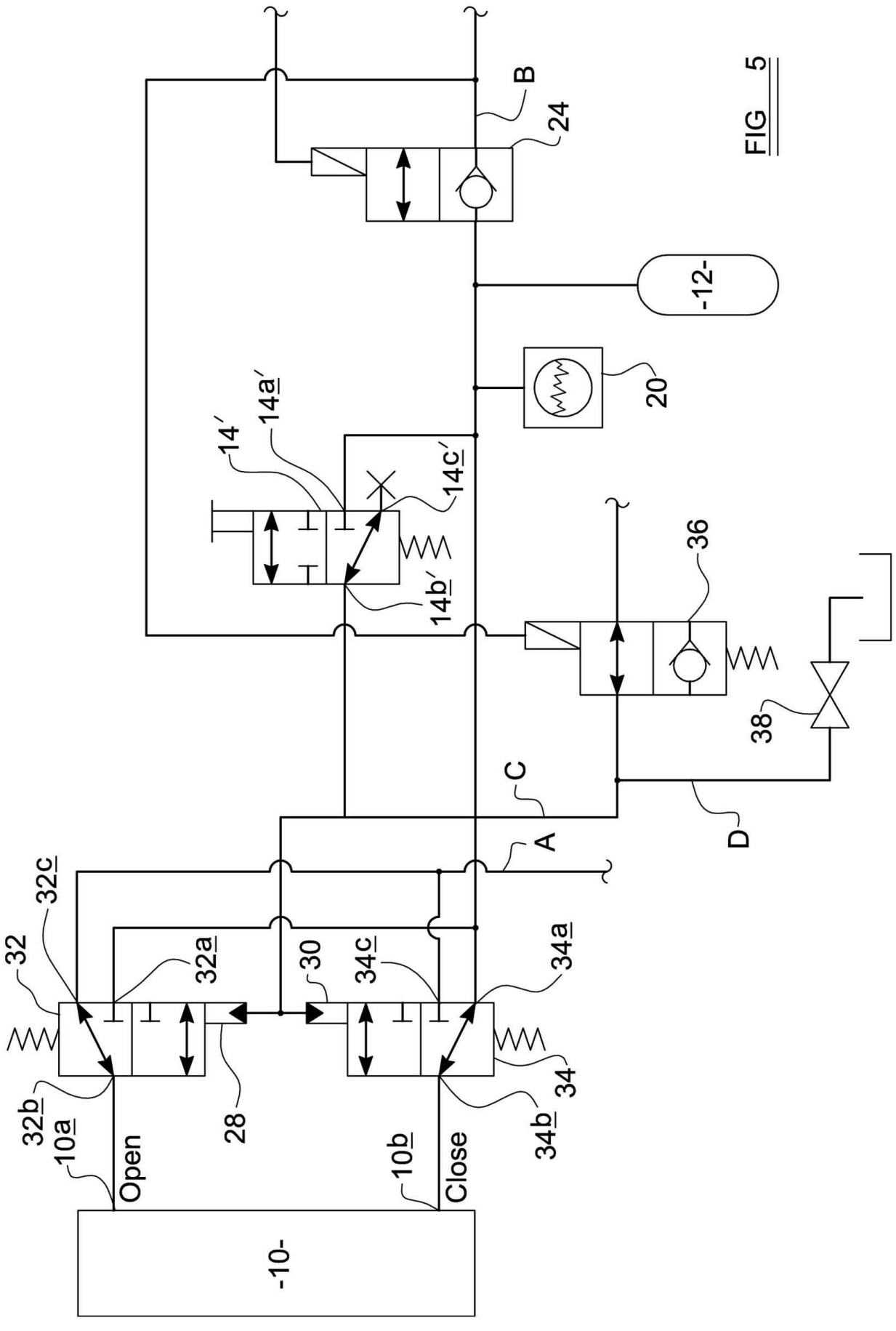
-10-
Open
Close
10a
10b
32b
32
32a
32c
28
30
34c
34a
34b
34
A
B
C
D
24
-12-
20
14′
14a′
14b′
14c′
36
38

FIG 5

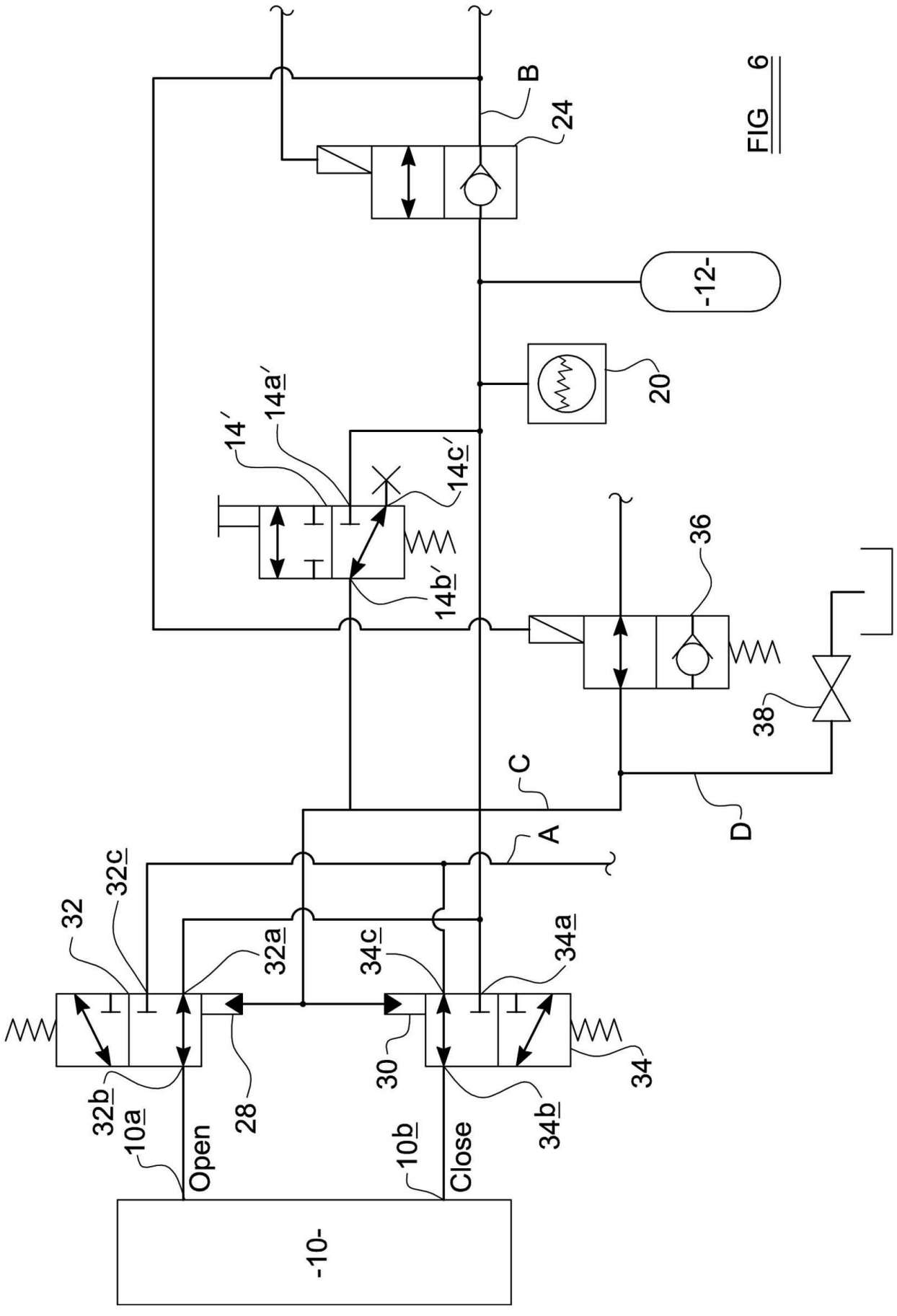
B
24
-12-
20
14′
14a′
14c′
14b′
36
38
C
D
A
32
32c
32a
34c
34a
32b
10a
Open
28
30
34
34b
10b
Close
-10-

FIG 6

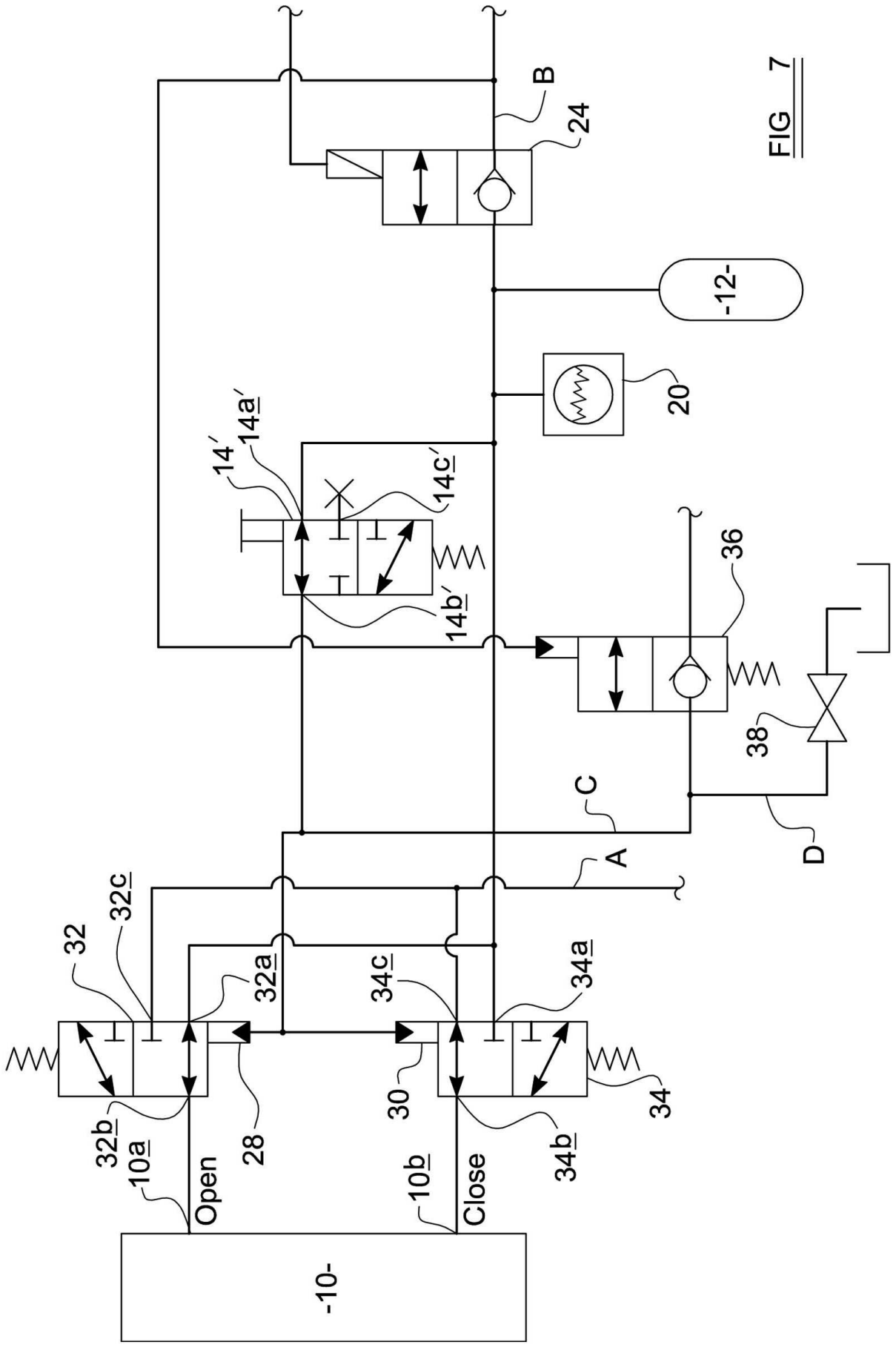
B
24
-12-
20
14′
14a′
14c′
14b′
36
38
C
D
A
32
32c
32a
34c
34a
32b
10a
Open
28
30
34
34b
10b
Close
-10-

FIG 7