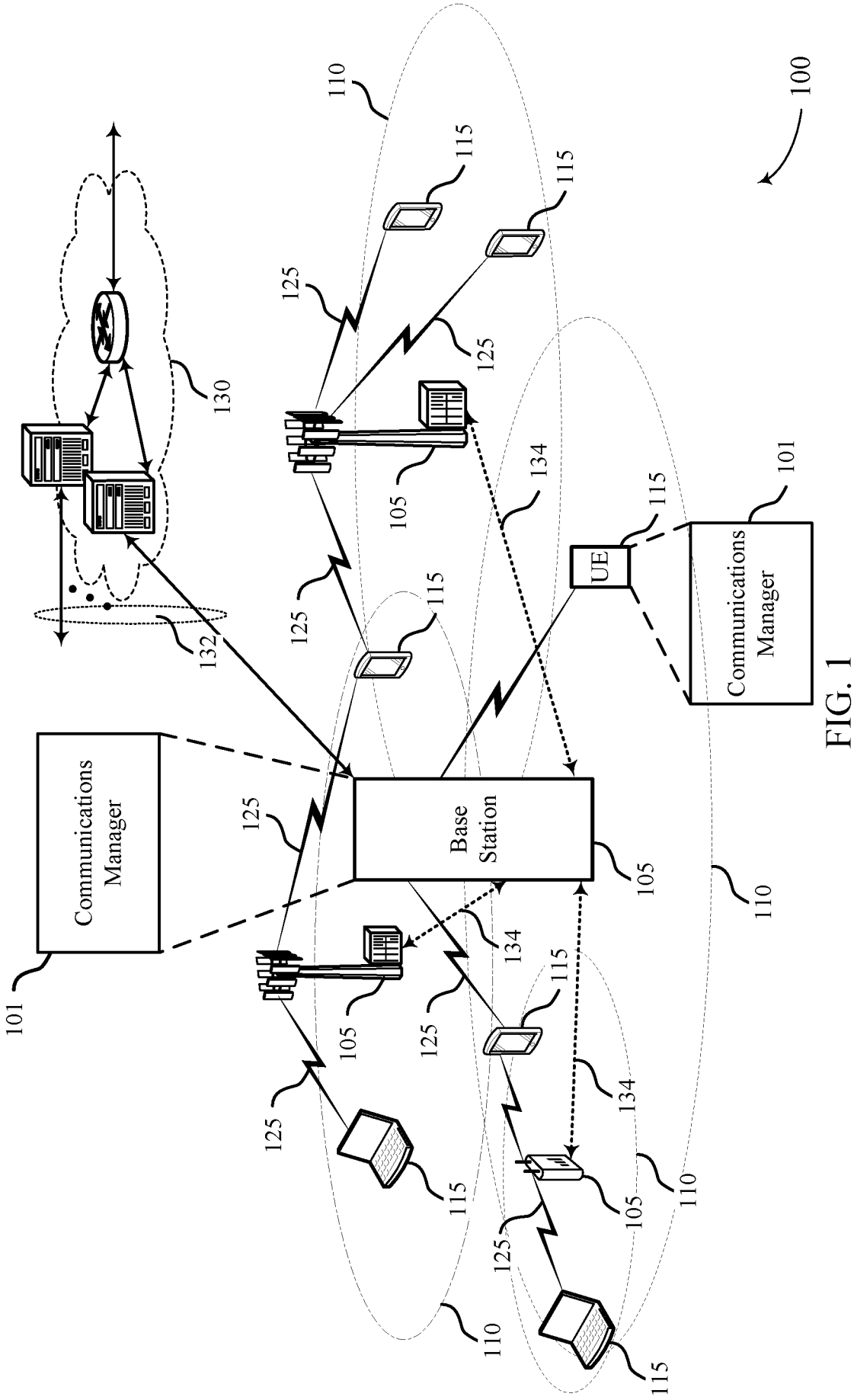
100
110
115
125
130
132
134
101
105
Communications Manager
Base Station
UE

FIG. 1

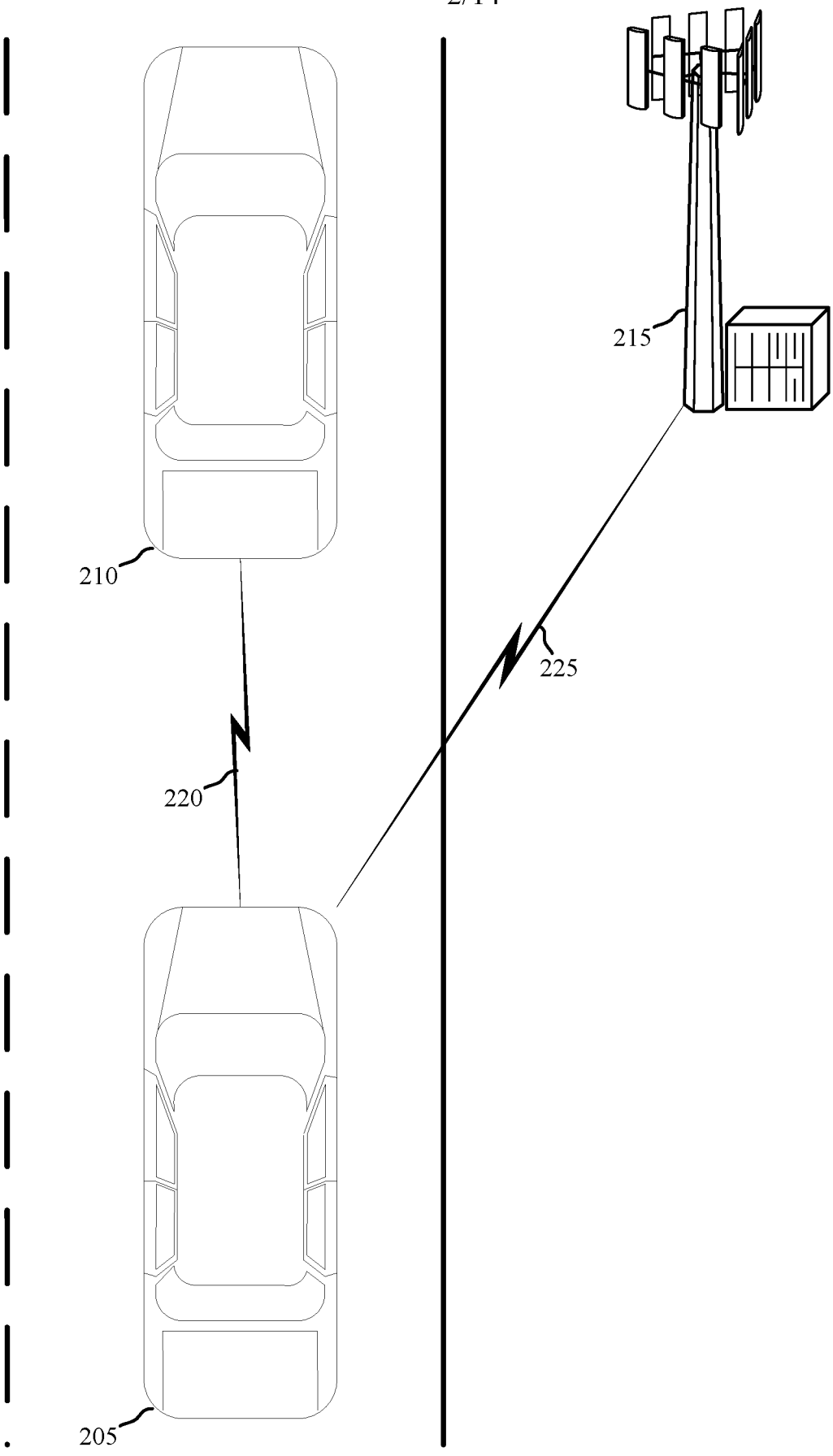

FIG. 2

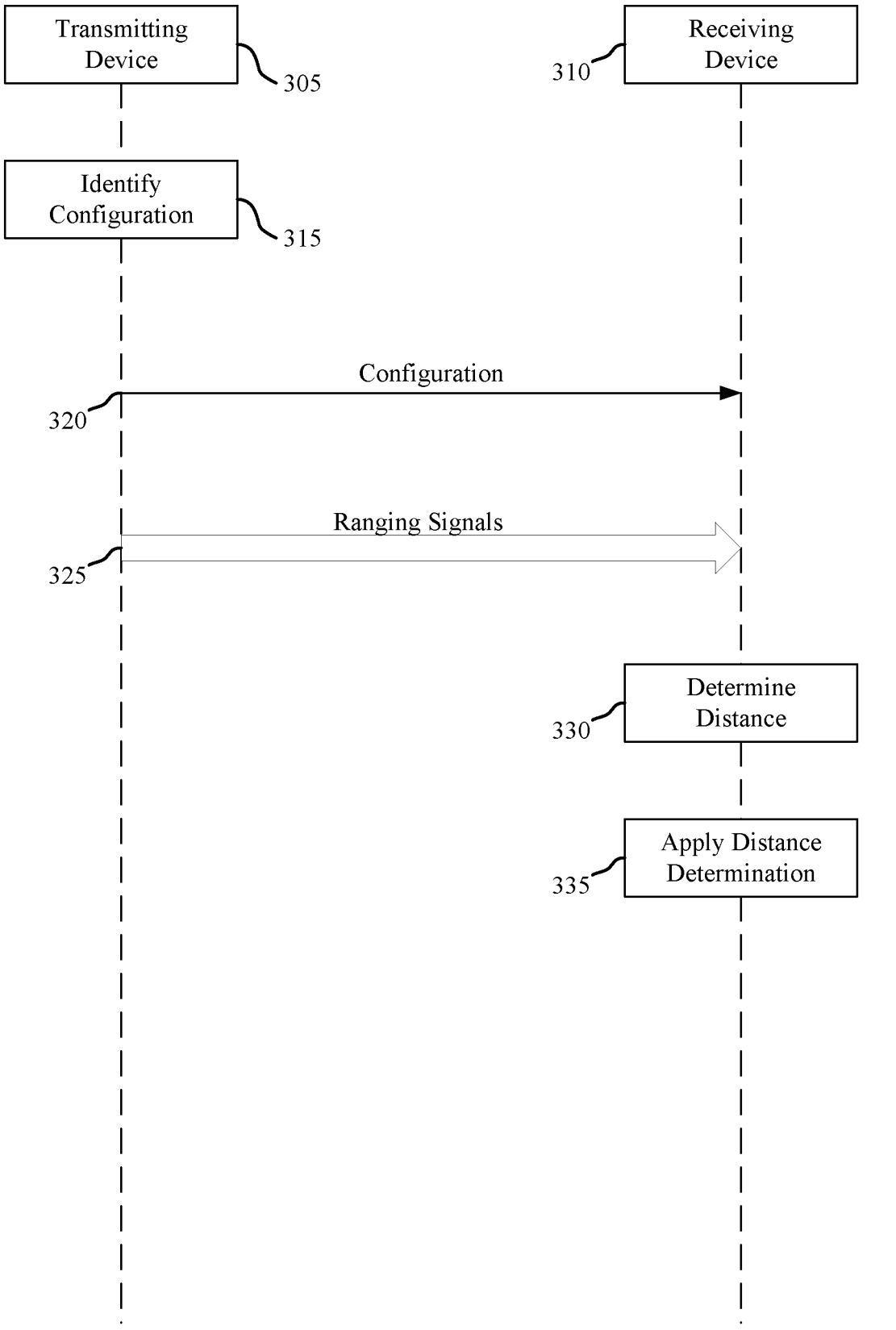
Transmitting Device
305
Receiving Device
310
Identify Configuration
315
Configuration
320
Ranging Signals
325
Determine Distance
330
Apply Distance Determination
335
300

FIG. 3

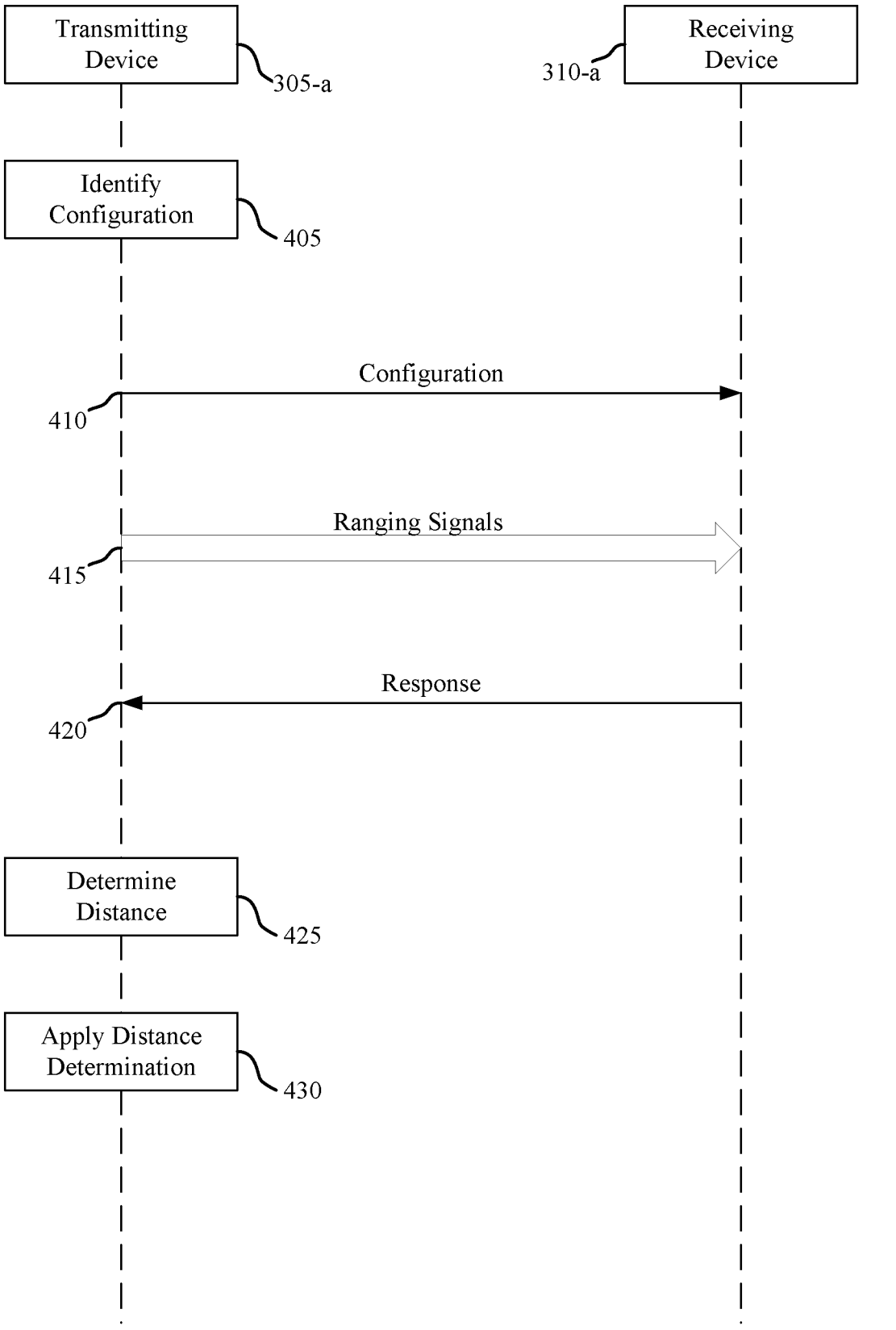
Transmitting Device
305-a
Receiving Device
310-a
Identify Configuration
405
Configuration
410
Ranging Signals
415
Response
420
Determine Distance
425
Apply Distance Determination
430
400

FIG. 4

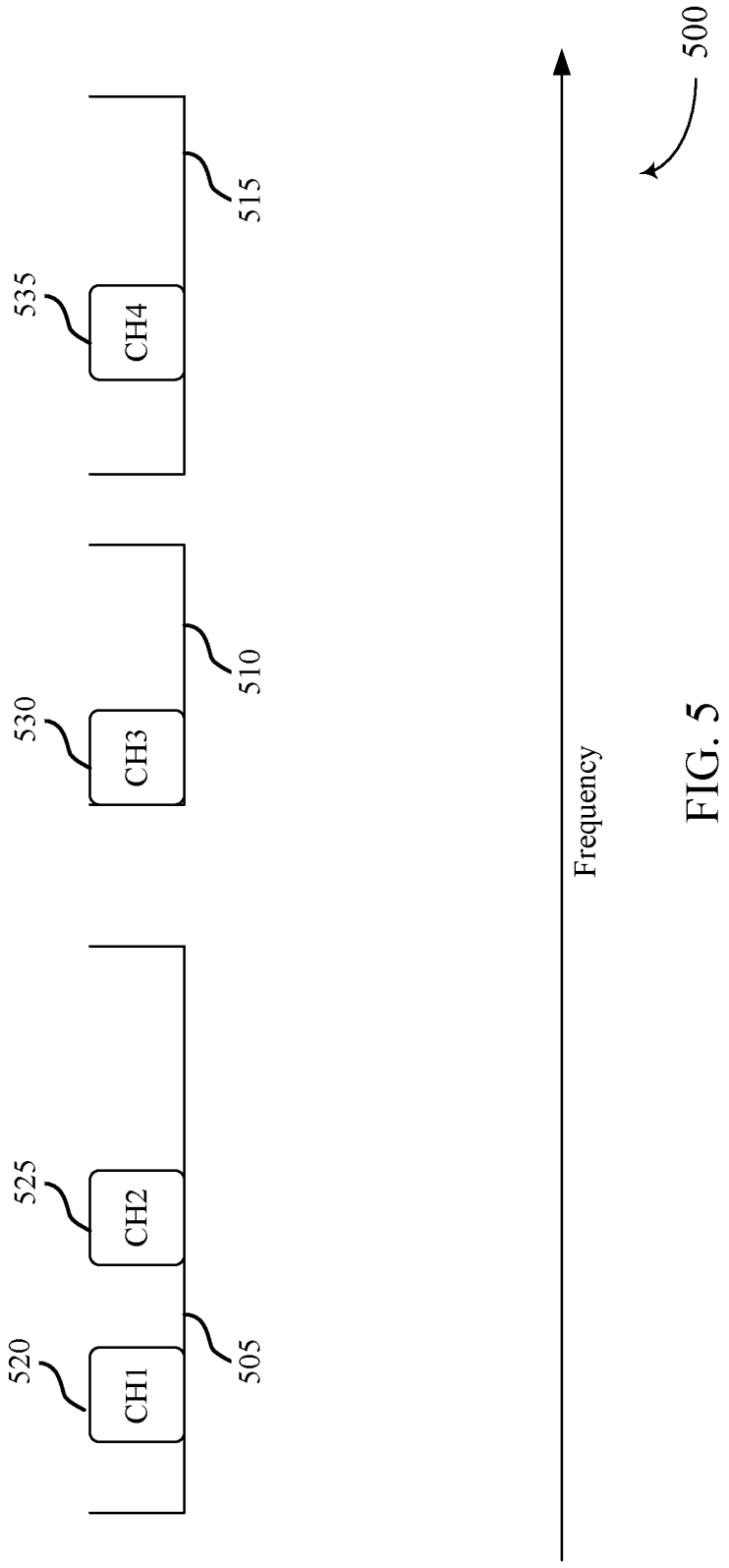

FIG. 5

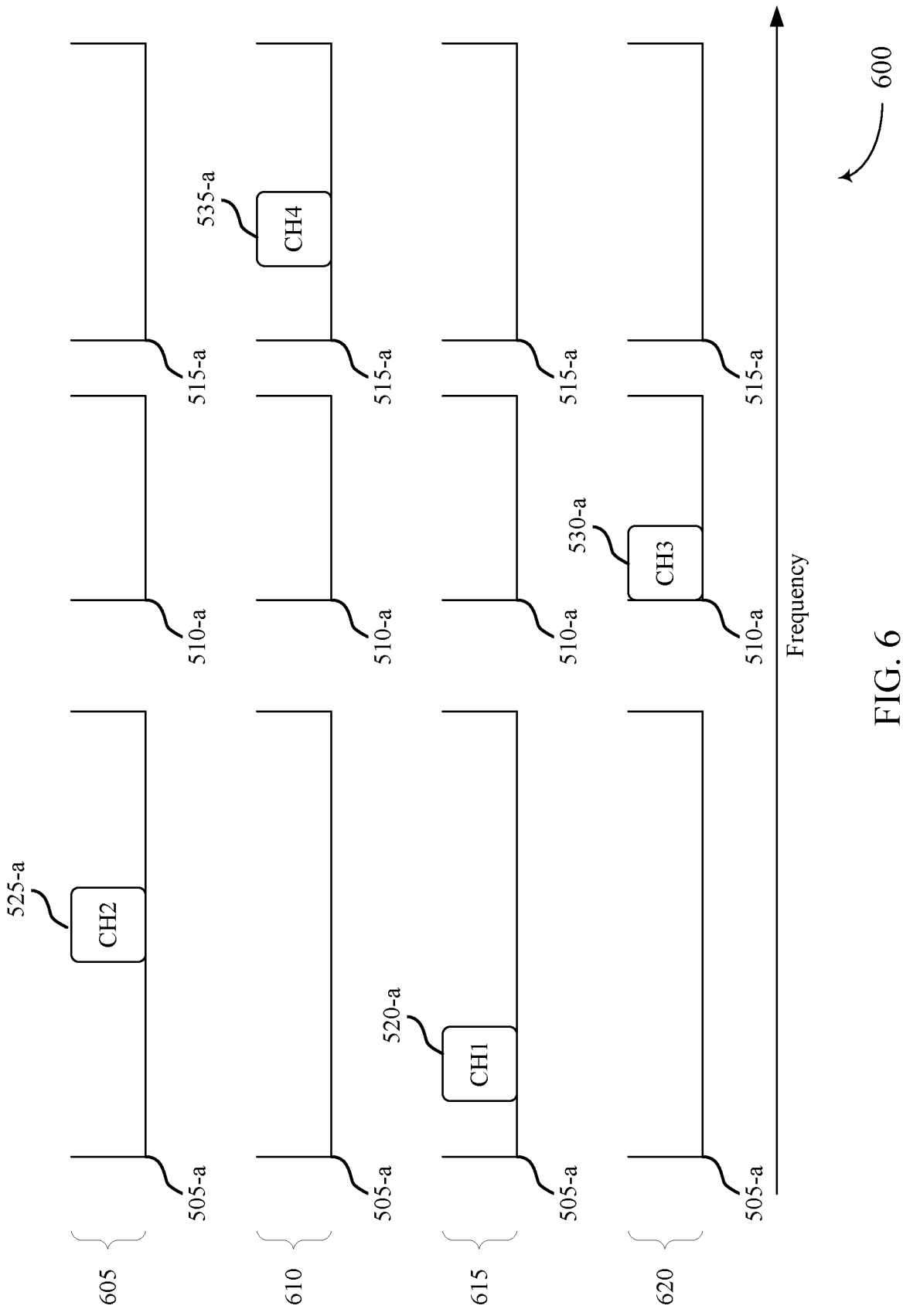
600
Frequency
605
610
615
620
505-a
510-a
515-a
525-a
CH2
520-a
CH1
530-a
CH3
535-a
CH4

FIG. 6

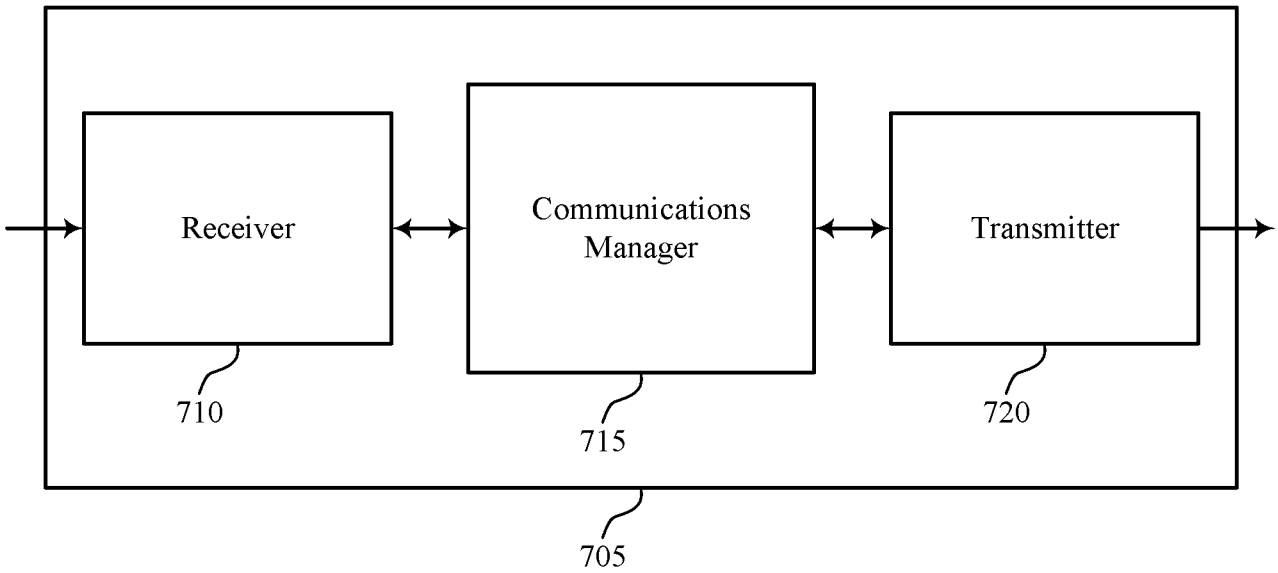
Receiver
Communications Manager
Transmitter
710
715
720
705
700

FIG. 7

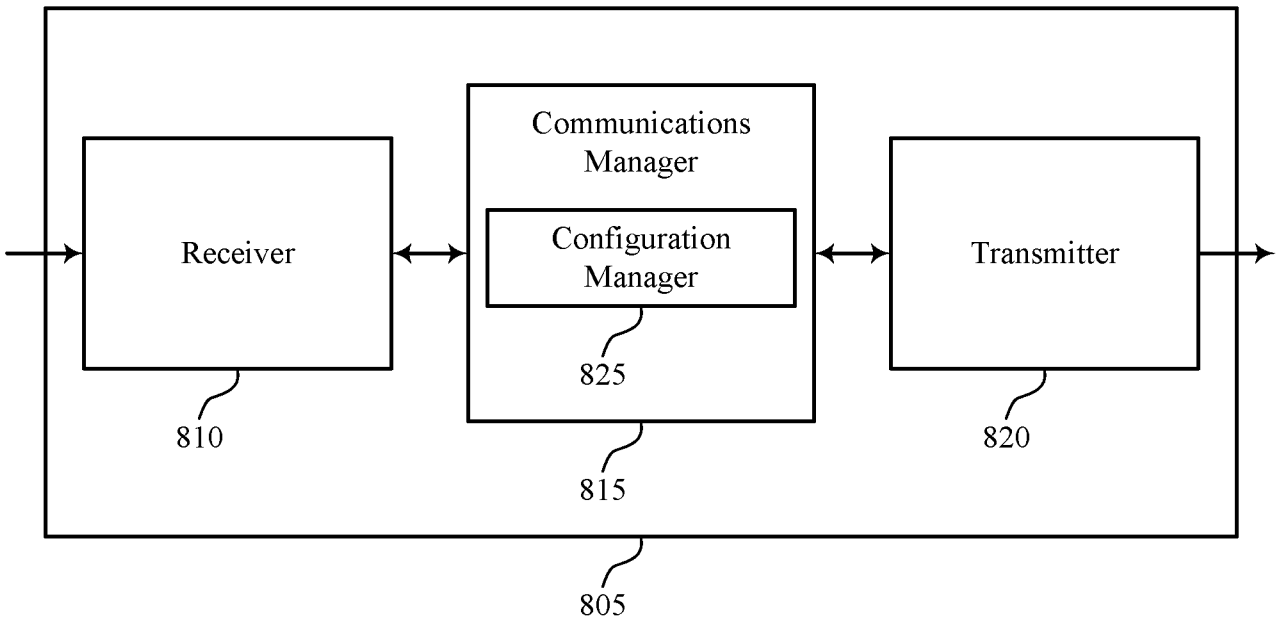
Communications Manager
Receiver
Configuration Manager
Transmitter
825
810
820
815
805

800

FIG. 8

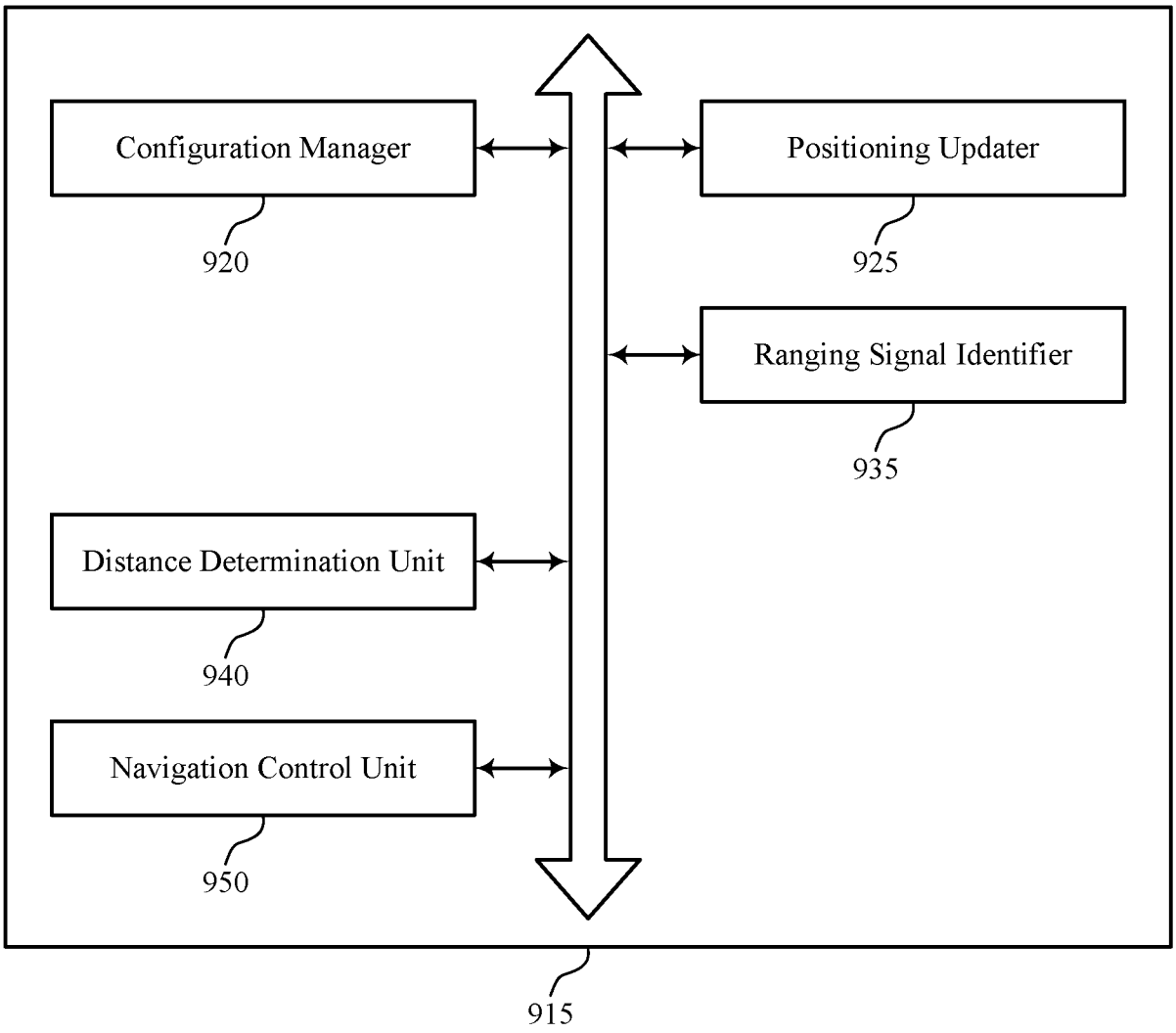
Configuration Manager
920
Positioning Updater
925
Ranging Signal Identifier
935
Distance Determination Unit
940
Navigation Control Unit
950
915
900

FIG. 9

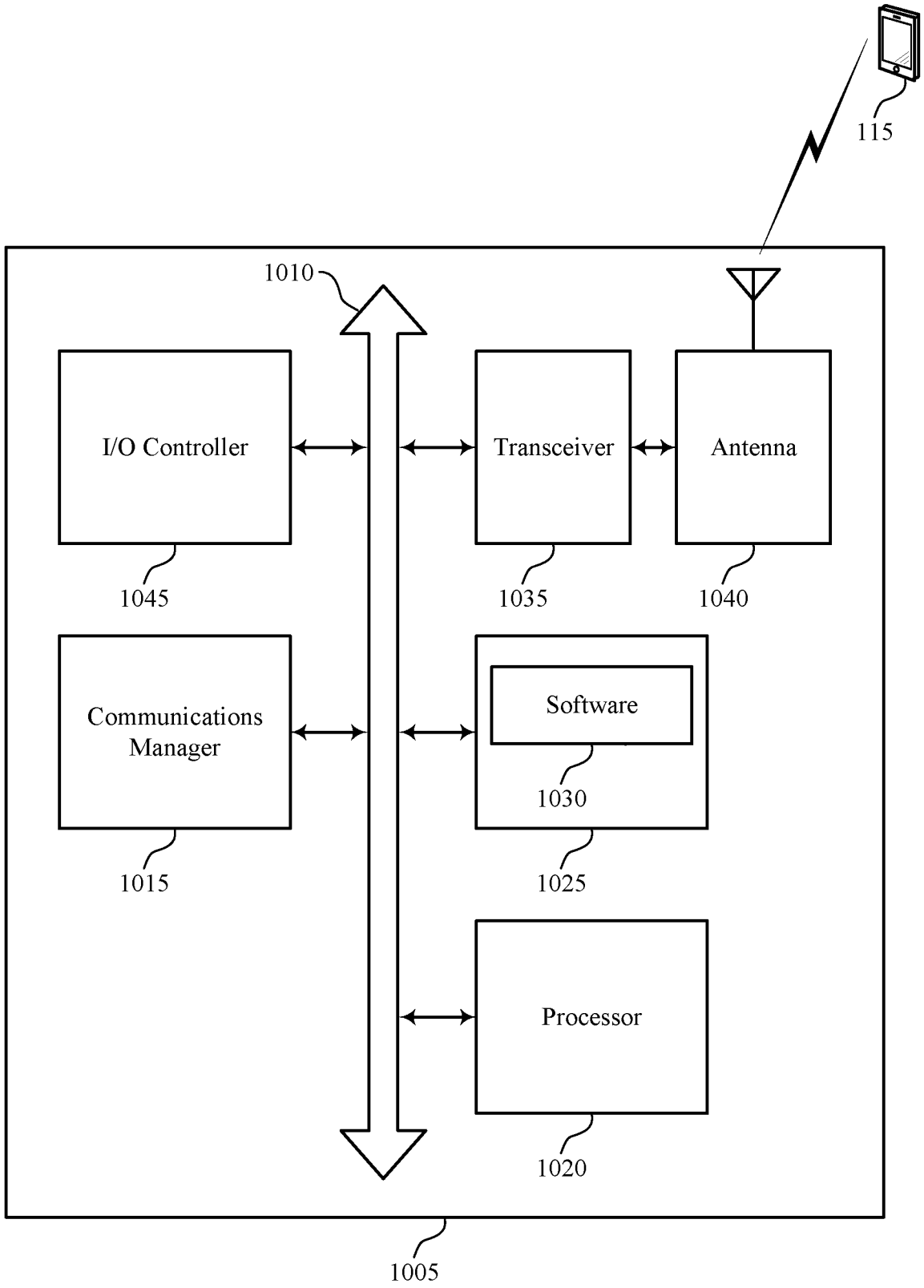
115
1010
I/O Controller
Transceiver
Antenna
1045
1035
1040
Communications Manager
Software
1030
1015
1025
Processor
1020
1005
1000

FIG. 10

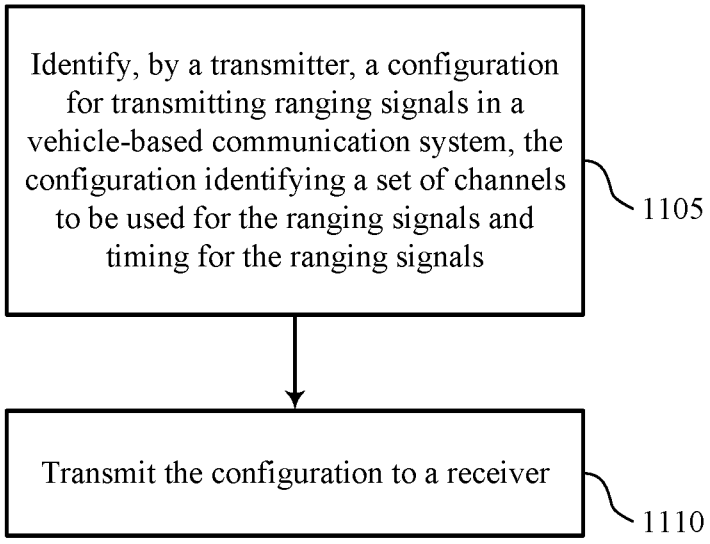
Identify, by a transmitter, a configuration for transmitting ranging signals in a vehicle-based communication system, the configuration identifying a set of channels to be used for the ranging signals and timing for the ranging signals
1105
Transmit the configuration to a receiver
1110
1100

FIG. 11

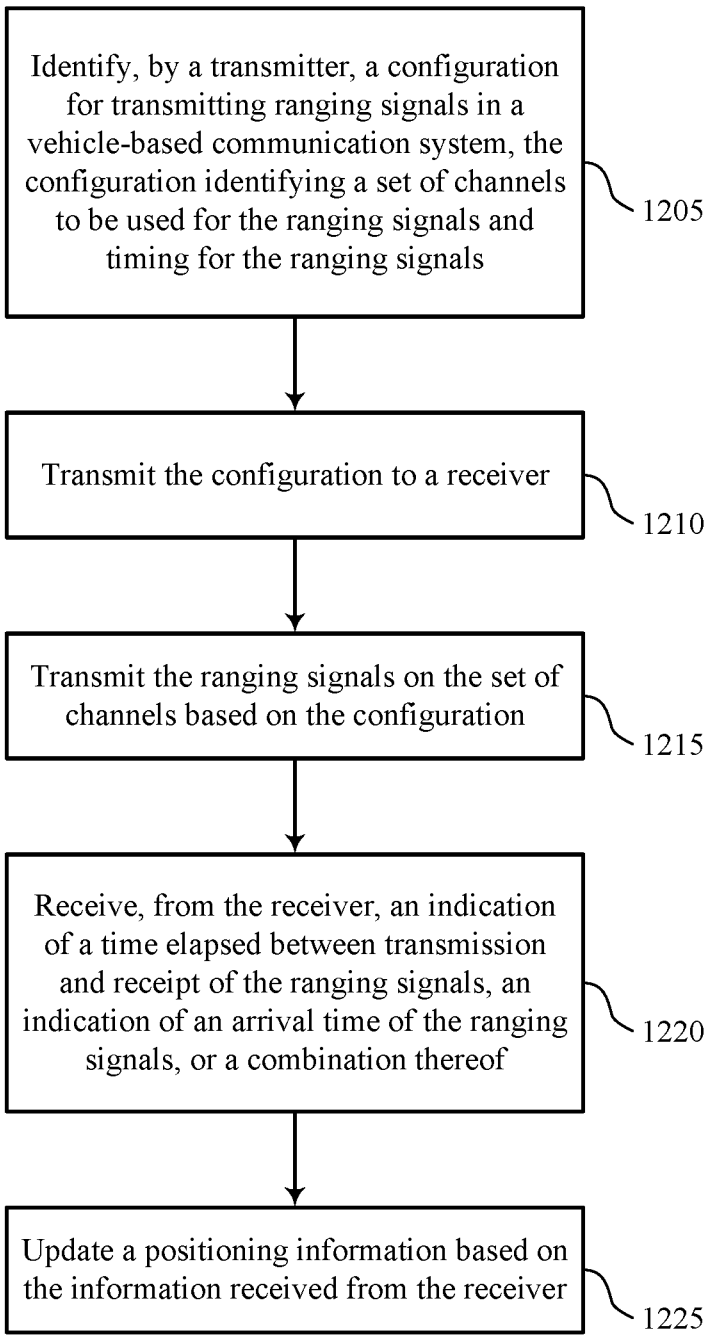
Identify, by a transmitter, a configuration for transmitting ranging signals in a vehicle-based communication system, the configuration identifying a set of channels to be used for the ranging signals and timing for the ranging signals
1205
Transmit the configuration to a receiver
1210
Transmit the ranging signals on the set of channels based on the configuration
1215
Receive, from the receiver, an indication of a time elapsed between transmission and receipt of the ranging signals, an indication of an arrival time of the ranging signals, or a combination thereof
1220
Update a positioning information based on the information received from the receiver
1225
1200

FIG. 12

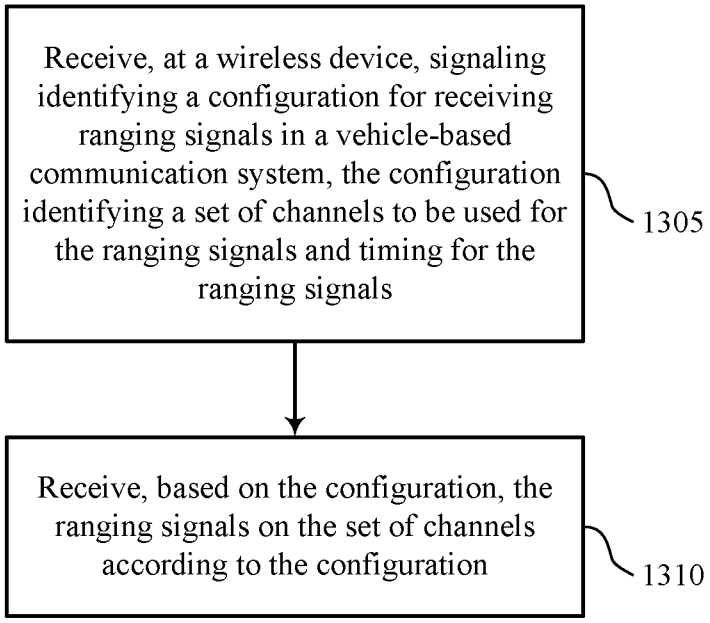
Receive, at a wireless device, signaling identifying a configuration for receiving ranging signals in a vehicle-based communication system, the configuration identifying a set of channels to be used for the ranging signals and timing for the ranging signals
1305
Receive, based on the configuration, the ranging signals on the set of channels according to the configuration
1310
1300

FIG. 13

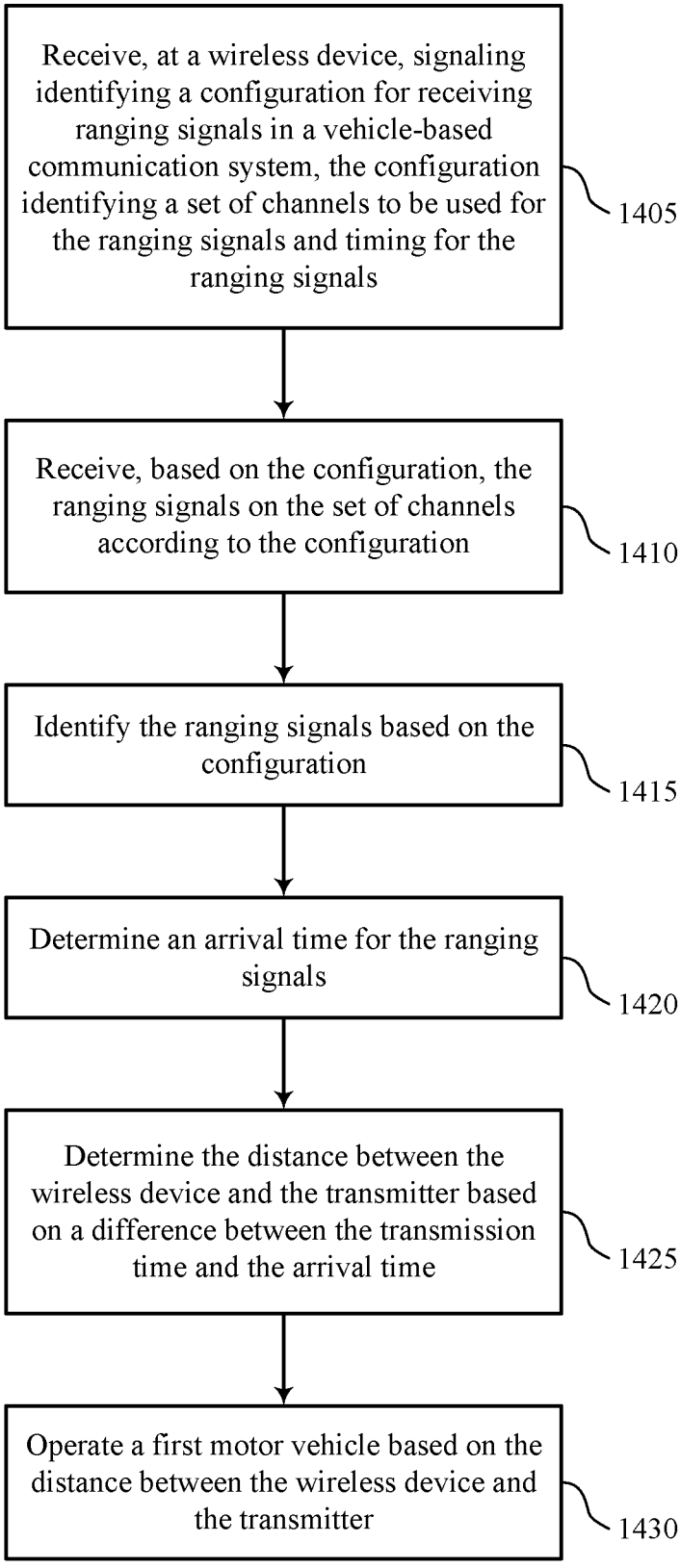
Receive, at a wireless device, signaling identifying a configuration for receiving ranging signals in a vehicle-based communication system, the configuration identifying a set of channels to be used for the ranging signals and timing for the ranging signals
1405
Receive, based on the configuration, the ranging signals on the set of channels according to the configuration
1410
Identify the ranging signals based on the configuration
1415
Determine an arrival time for the ranging signals
1420
Determine the distance between the wireless device and the transmitter based on a difference between the transmission time and the arrival time
1425
Operate a first motor vehicle based on the distance between the wireless device and the transmitter
1430
1400

FIG. 14