Fig. 1

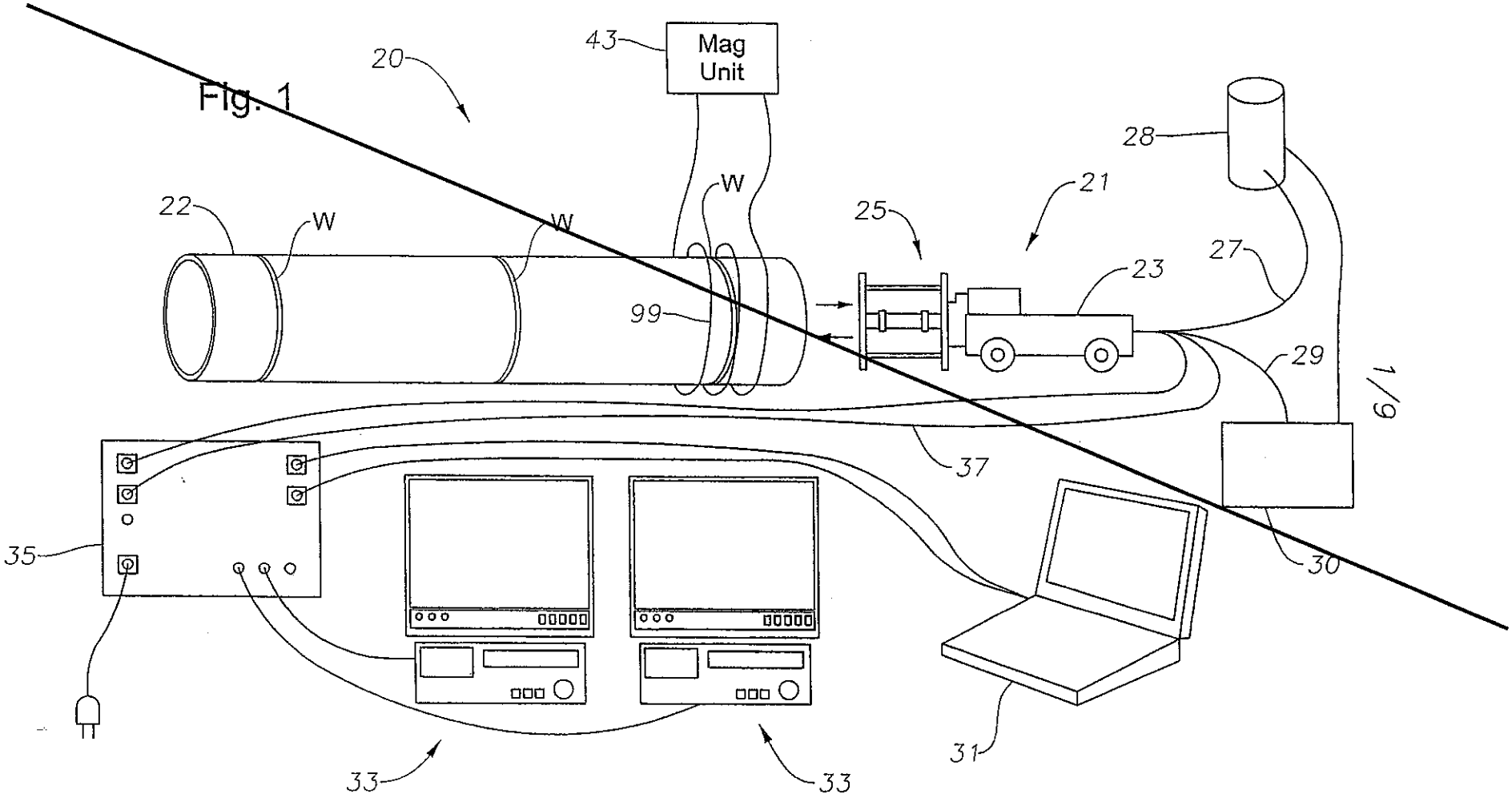

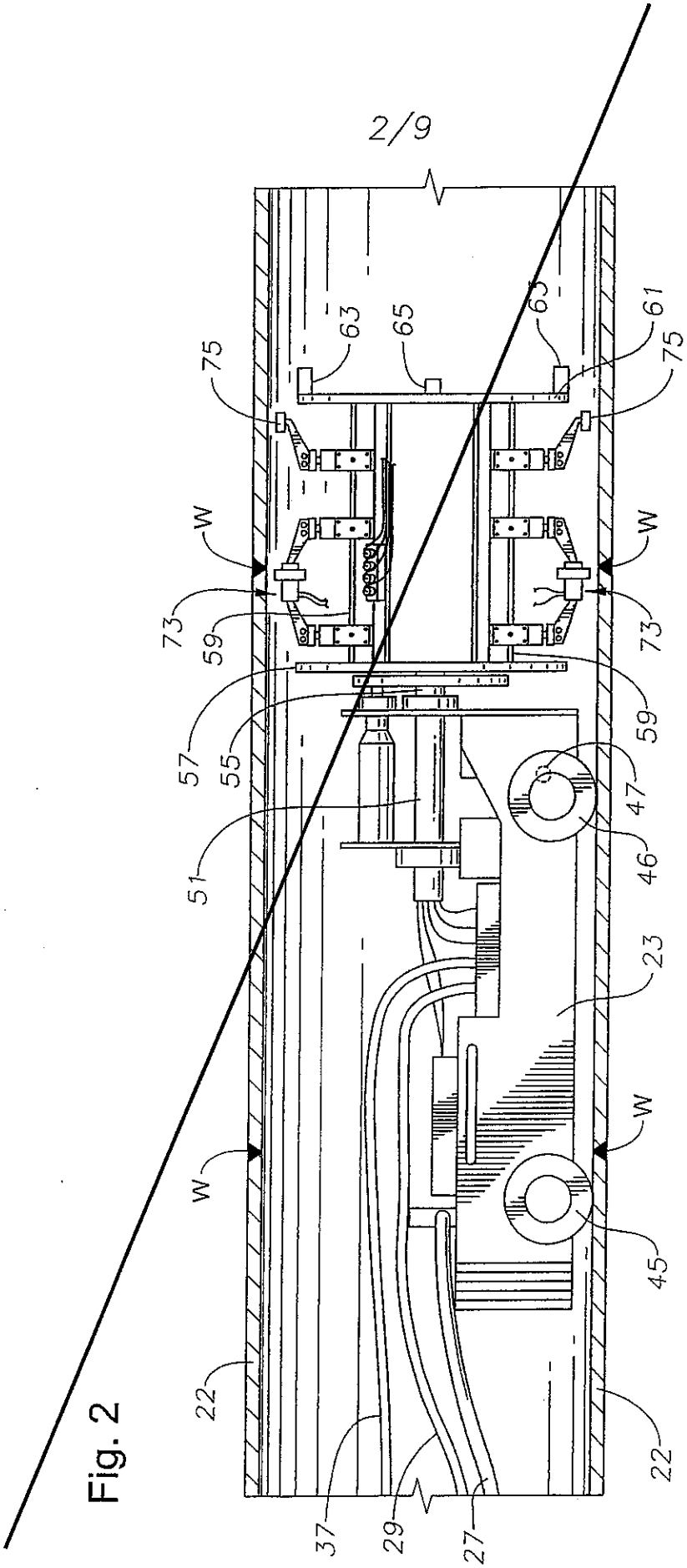

Fig. 2

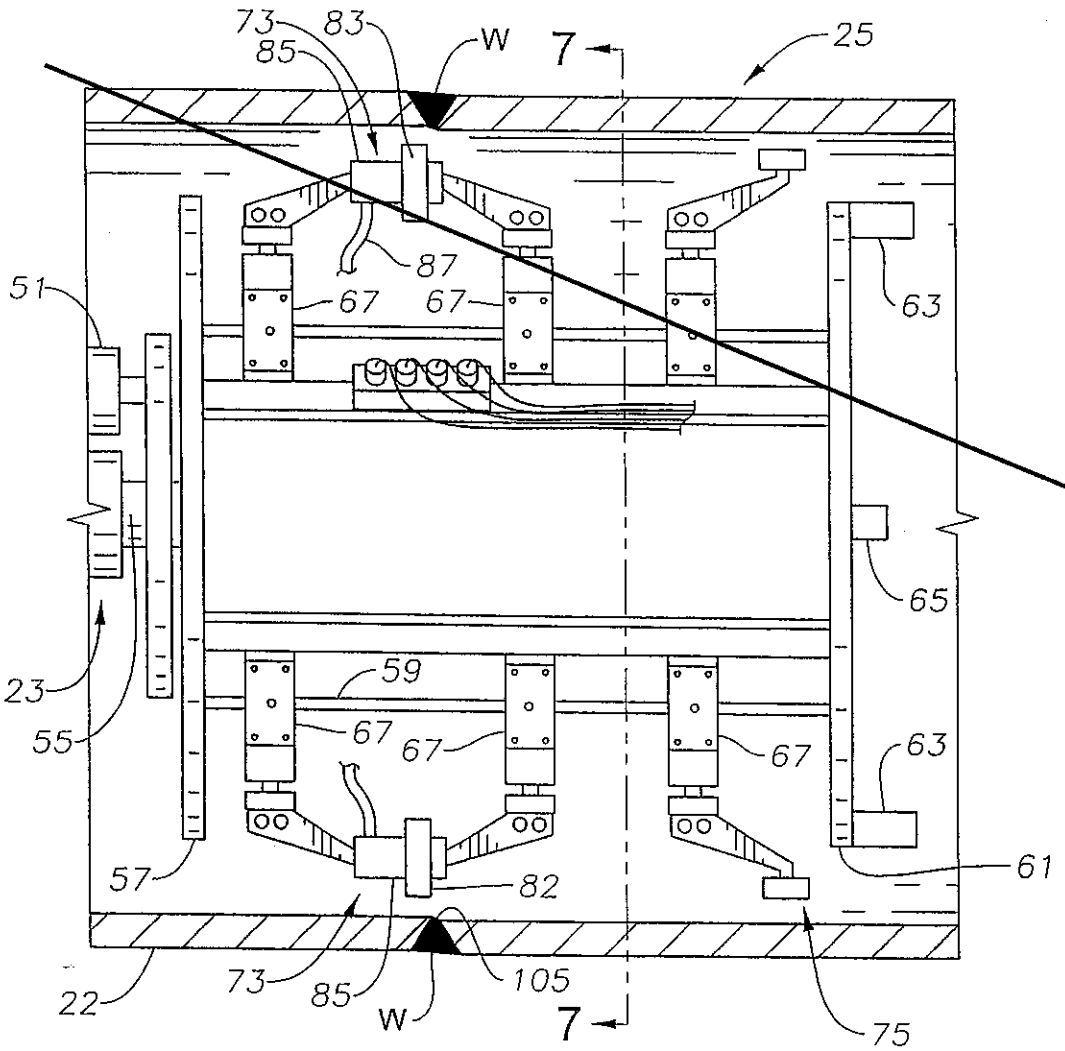
73
83
85
W
7
25
87
67
67
63
51
65
59
67
67
67
63
23
55
57
82
61
22
73
85
W
105
7
75

Fig. 3

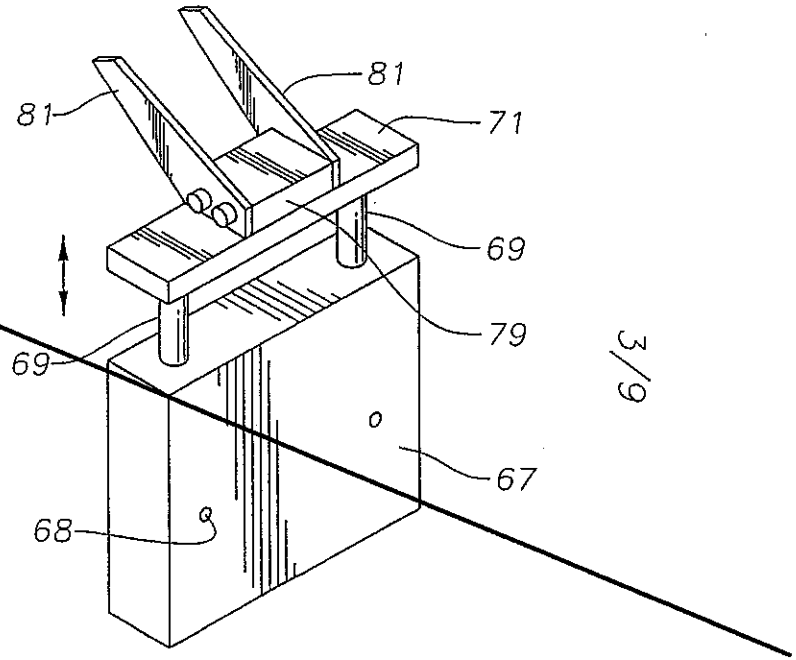
81
81
71
69
79
69
67
68

Fig. 4

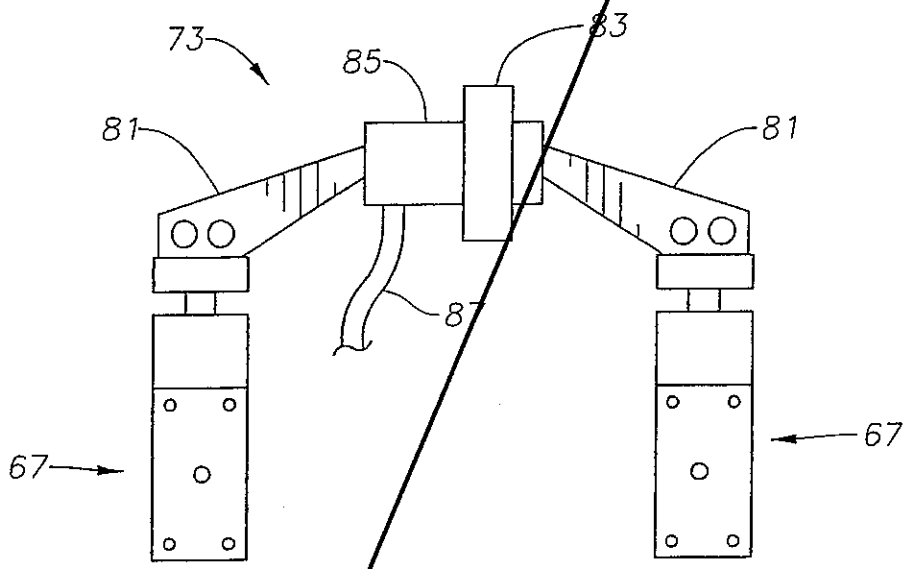

Fig. 5

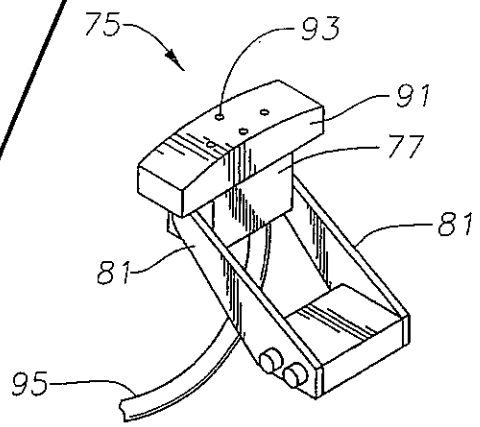

Fig. 6

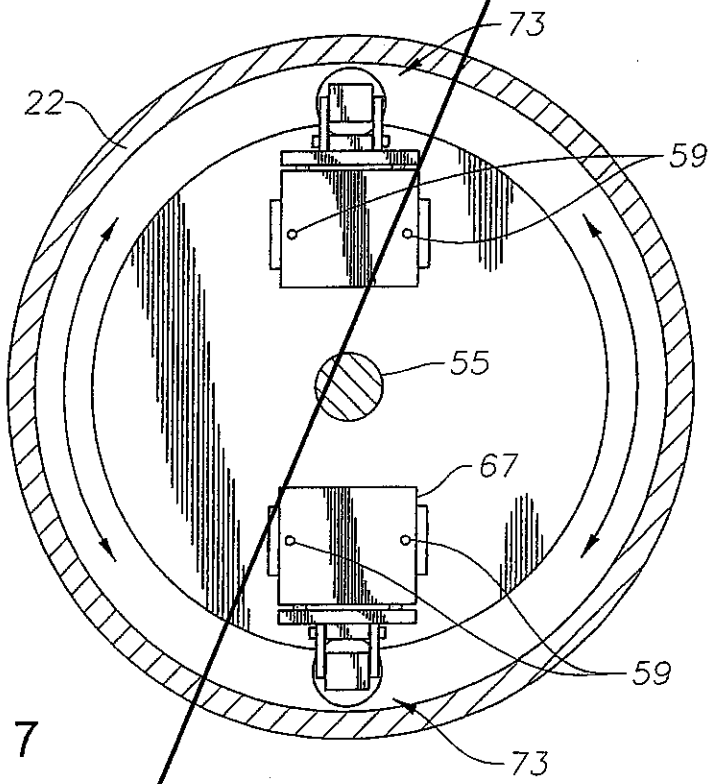
73
22
59
55
67
59
73

Fig. 7

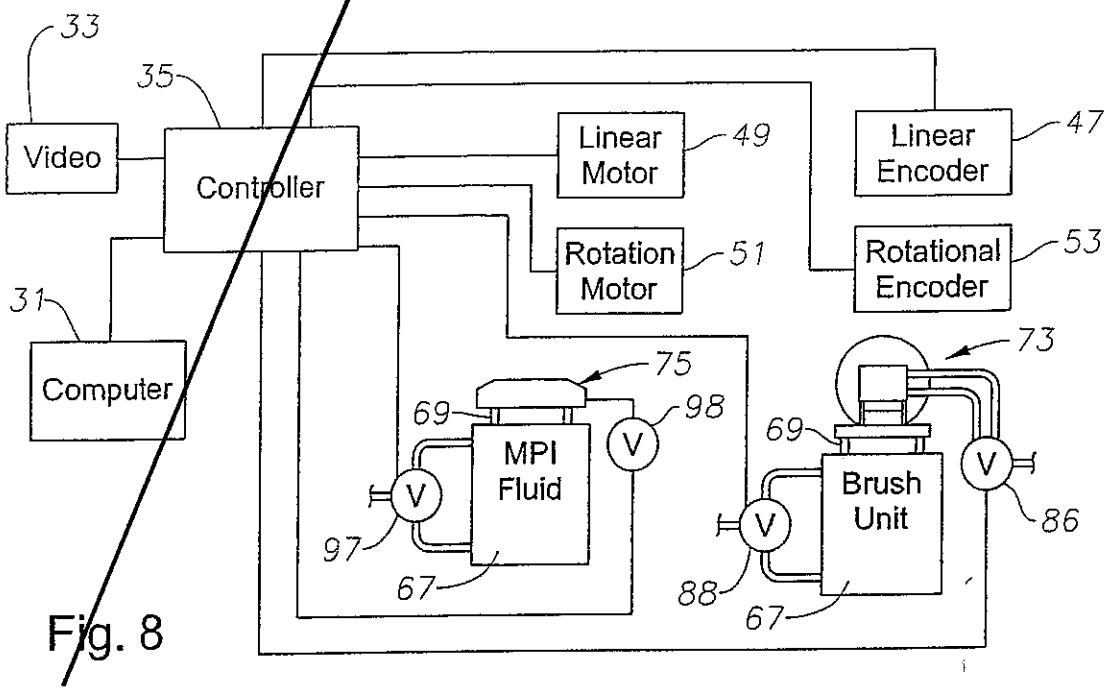
33
35
Video
Controller
Linear Motor
49
Linear Encoder
47
Rotation Motor
51
Rotational Encoder
53
31
Computer
75
73
69
98
MPI Fluid
V
V
97
67
69
Brush Unit
V
V
86
88
67

Fig. 8

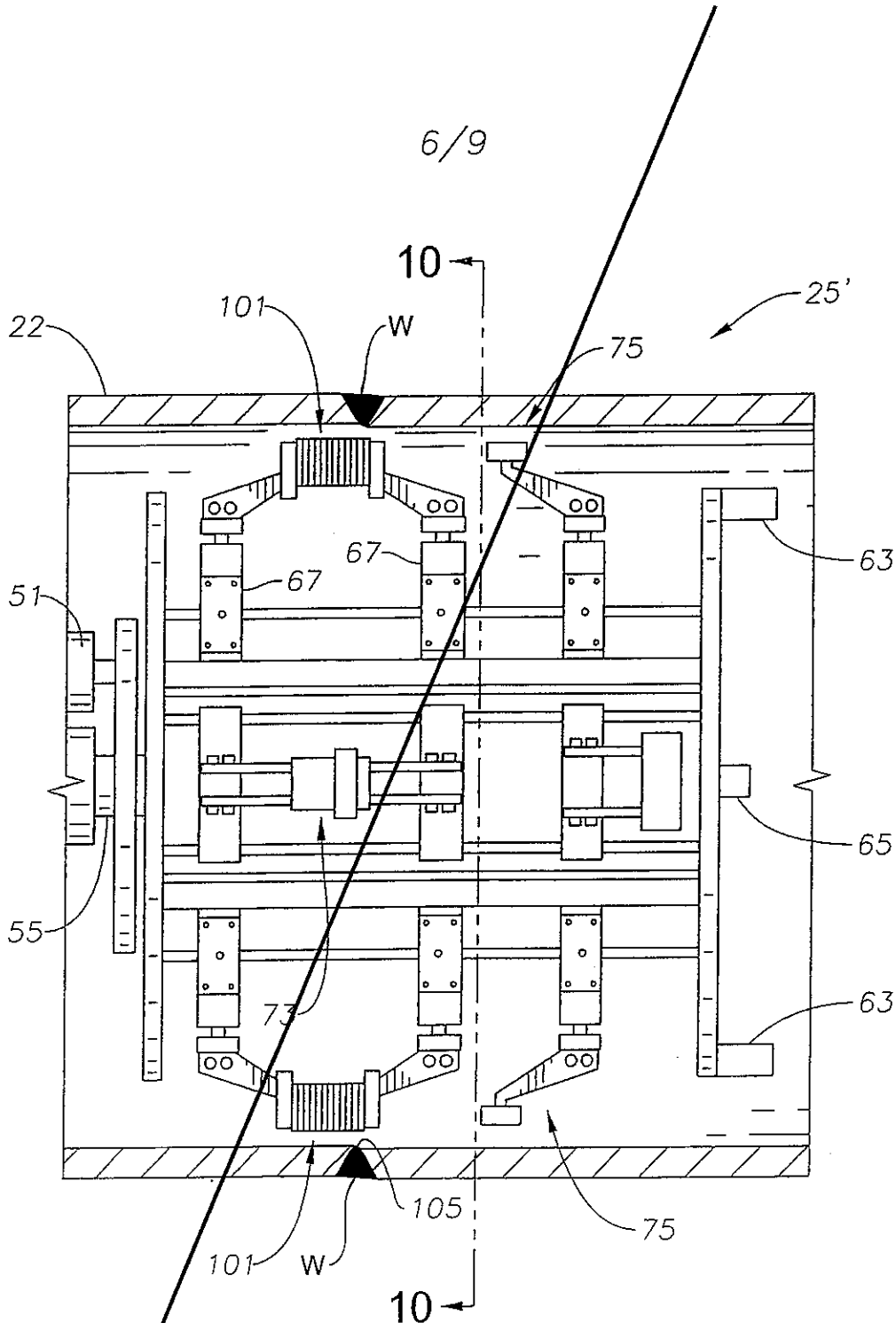

Fig. 9

Fig. 10

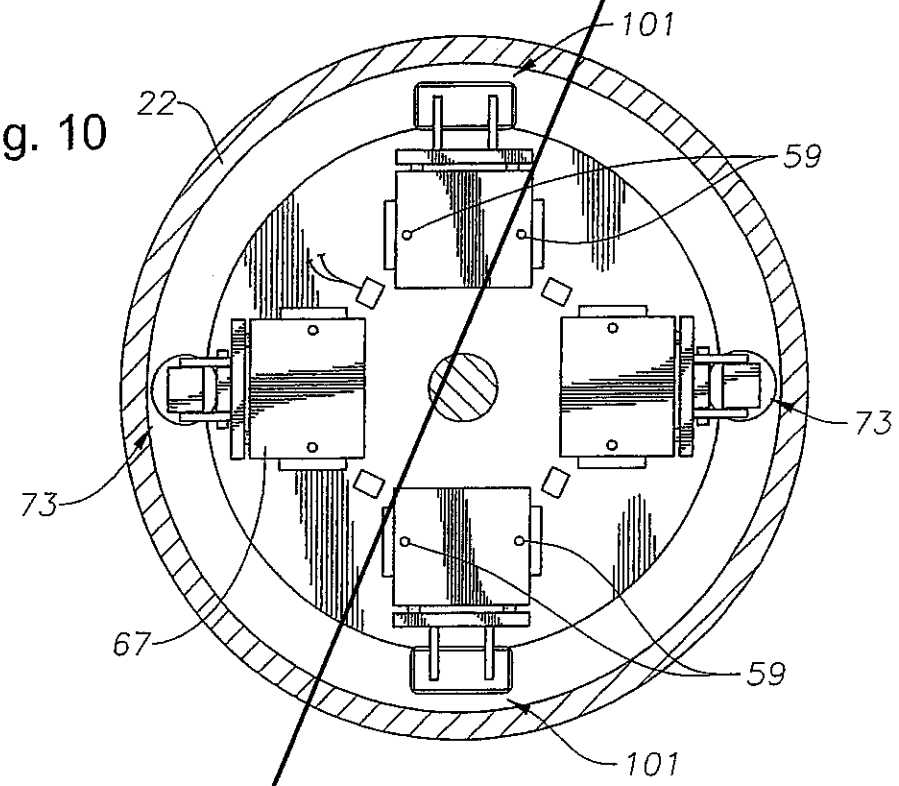
101
22
59
73
73
67
59
101

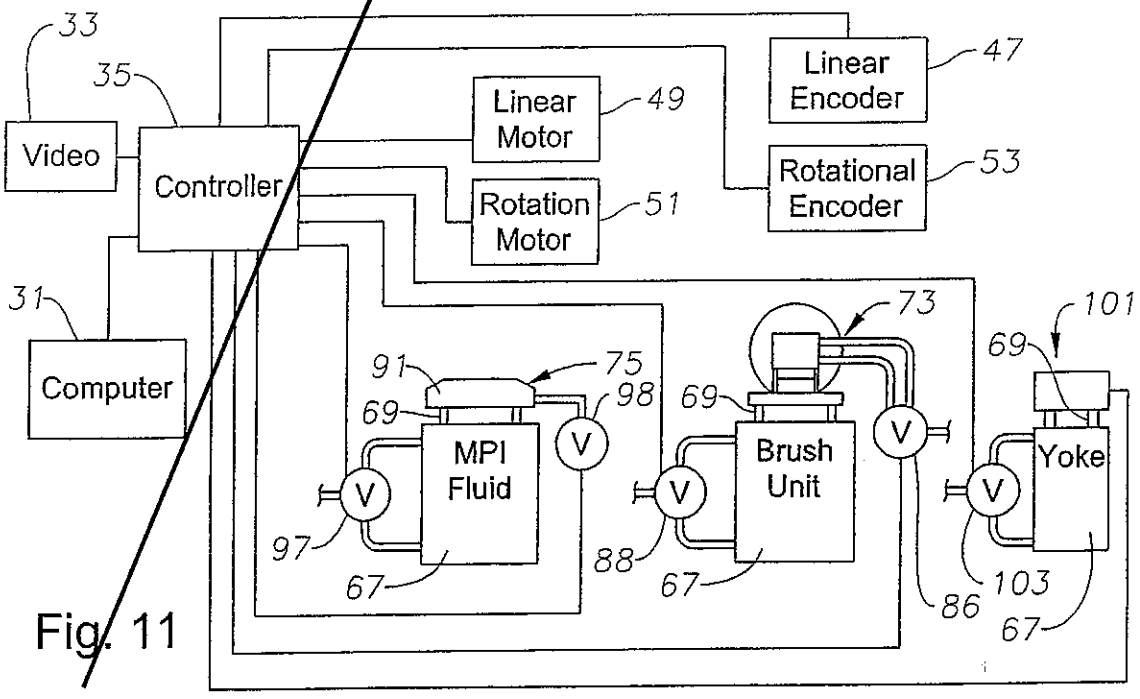
33
35
Video
Controller
Linear Motor
49
Linear Encoder
47
Rotation Motor
51
Rotational Encoder
53
31
Computer
73
101
91
75
98
69
69
69
MPI Fluid
Brush Unit
Yoke
V
V
V
V
V
97
67
88
67
86
103
67

Fig. 11

Fig. 12

Abbreviated External Magnetic Field Procedure

Step 1: Prepare inspection apparatus

Step 2: Load the inspection apparatus and set linear encoder

Step 3: Advance inspection apparatus down inner diameter of the pipe and locate center of weld with onboard video device

Step 4: Position wire wheel brushes over the weld

Step 5: Actuate cylinder rods to position wire wheel brush in contact with the weld

Step 6: Actuate pneumatic motors to rotate wire wheel brushes

Step 7: Rotate head unit back and forth until weld area is clean

Step 8: Position MPI medium dispensers adjacent the weld and apply MPI medium through an MPI supply system

Step 9: Position video cameras adjacent the weld

Step 10: Activate MPI magnetic unit to establish magnetic field and magnetize inspection area

Step 11: Activate artificial light source

Step 12: Rotate head unit to position video cameras along the inner diameter of the weld area

Step 13: View, record, and store the video output of the reach of the video cameras

Step 14: Calculate weld offset

Step 15: Repeat steps 3 to 14 on next weld until pipe inspection complete

Step 16: Actuate the linear motor to retrieve the inspection apparatus

Fig. 13

Abbreviated Internal Magnetic Field Procedure

Step 1: Prepare inspection apparatus

Step 2: Load the inspection apparatus and set linear encoder

Step 3: Advance inspection apparatus down inner diameter of the pipe and locate center of weld with onboard video device

Step 4: Position wire wheel brushes over the weld

Step 5: Actuate cylinder rods to position wire wheel brush in contact with the weld

Step 6: Actuate pneumatic motors to rotate wire wheel brushes

Step 7: Rotate head unit back and forth until weld area is clean

Step 8: Position magnetic yoke adjacent the weld

Step 9: Actuate cylinder rods to position magnetic yoke radially and activate

Step 10: Position MPI medium dispensers as necessary and apply MPI medium through an MPI supply system

Step 11: Activate artificial light source, as necessary

Step 12: View, record, and store the video output of the each of the video cameras

Step 13: Rotate head unit and repeat steps 8 to 11 until weld inspection complete

Step 14: Repeat steps 3 to 12 on next weld until pipe inspection complete

Step 15: Actuate the linear motor to retrieve the inspection apparatus

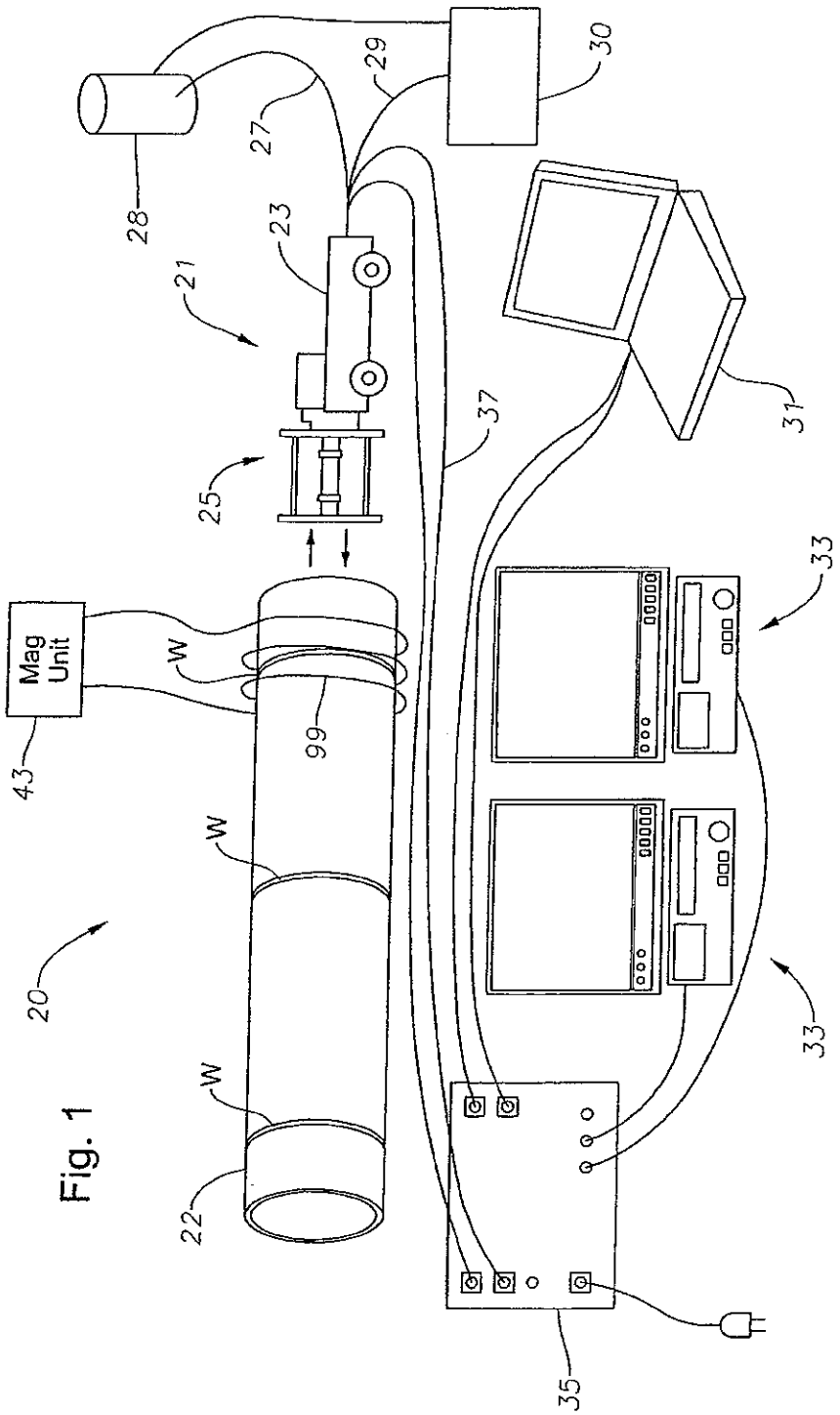

Fig. 1

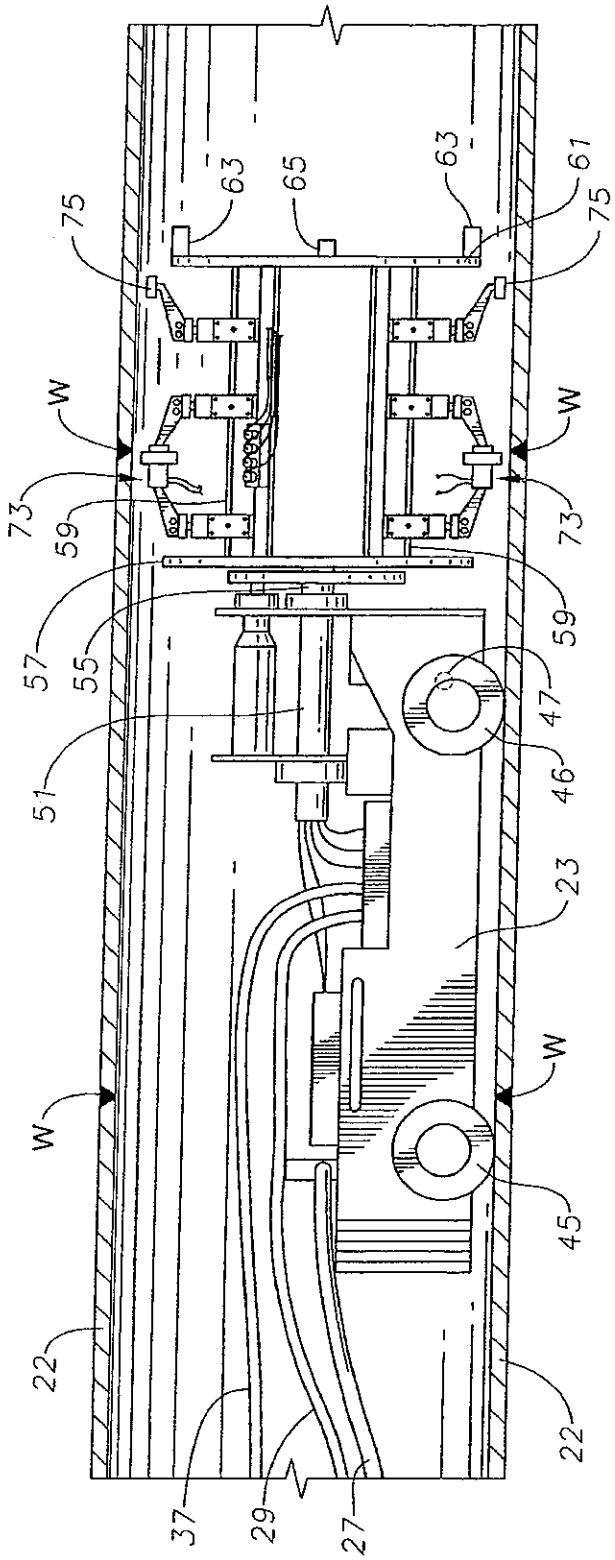

Fig. 2

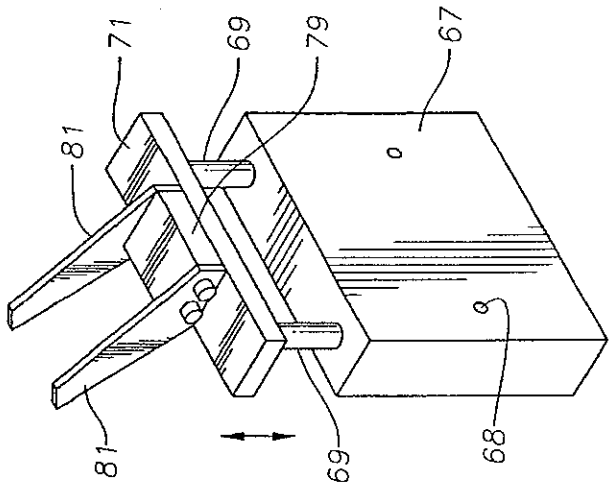
71
69
79
67
81
81
69
68

Fig. 4

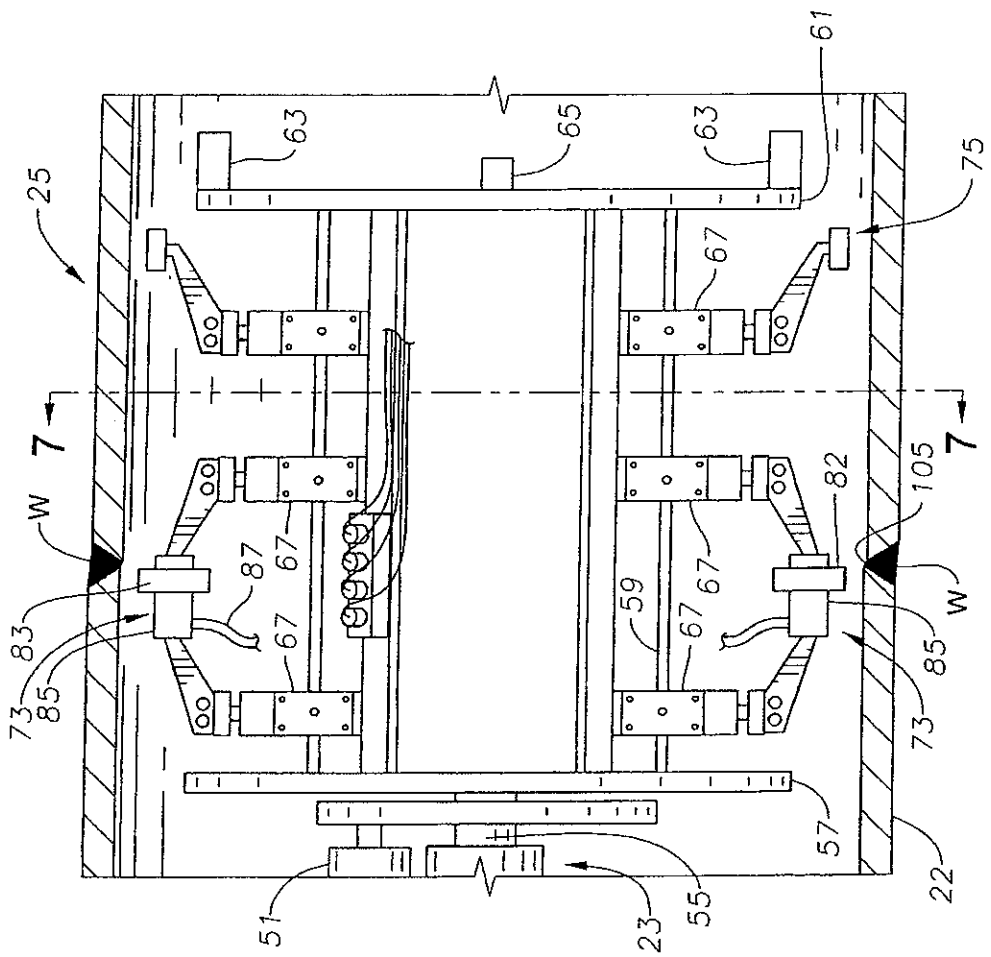
25
63
65
63
61
75
67
7
7
W
W
83
73
85
87
67
67
59
67
67
82
105
85
73
57
22
51
23
55

Fig. 3

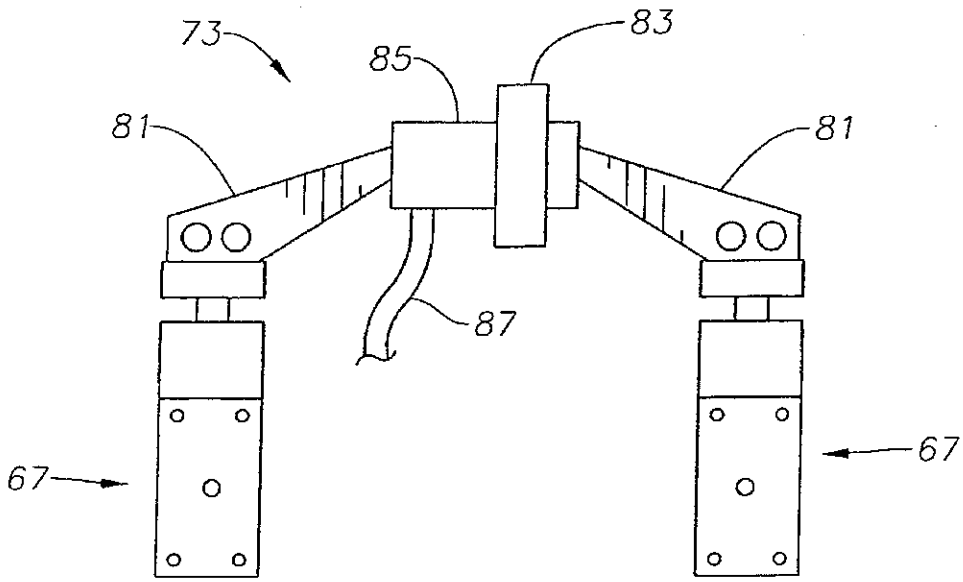

Fig. 5

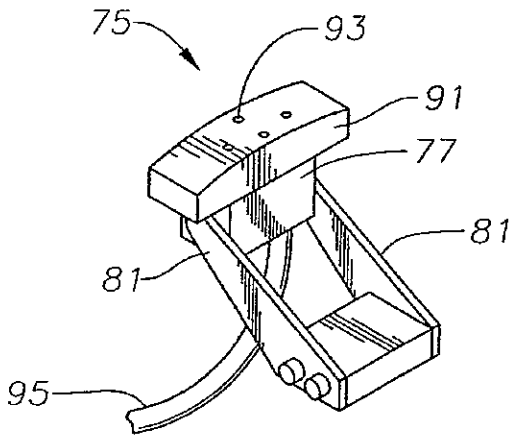

Fig. 6

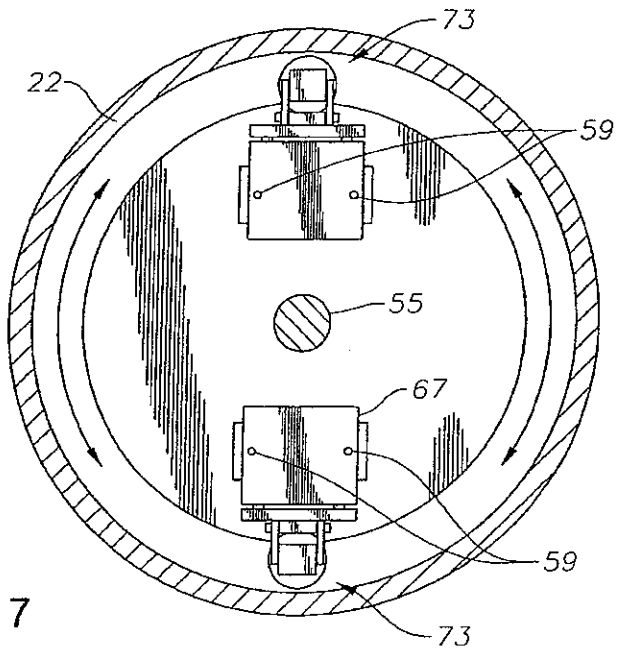
73
22
59
55
67
59
73

Fig. 7

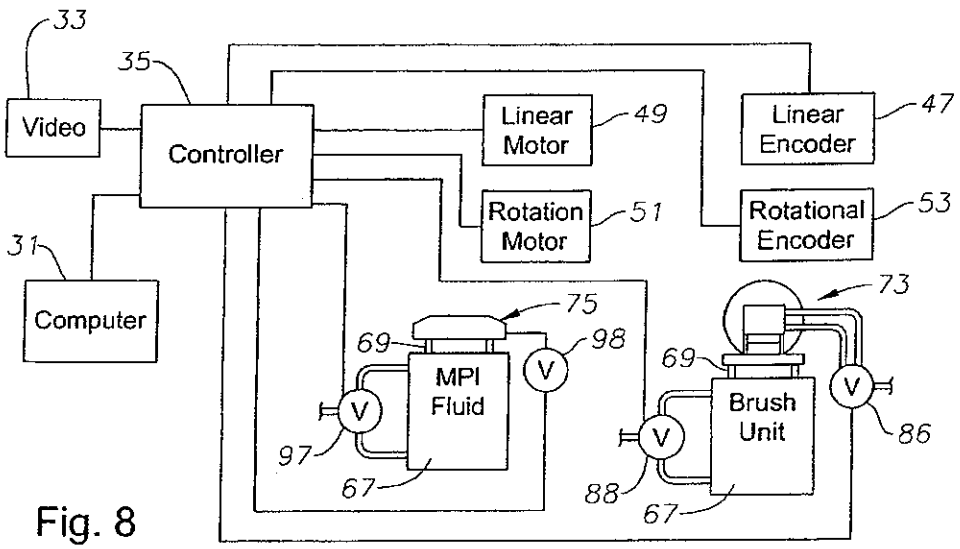
33
35
Video
Controller
Linear Motor
49
Linear Encoder
47
Rotation Motor
51
Rotational Encoder
53
31
Computer
75
73
69
98
MPI Fluid
V
V
97
67
69
Brush Unit
V
V
86
88
67

Fig. 8

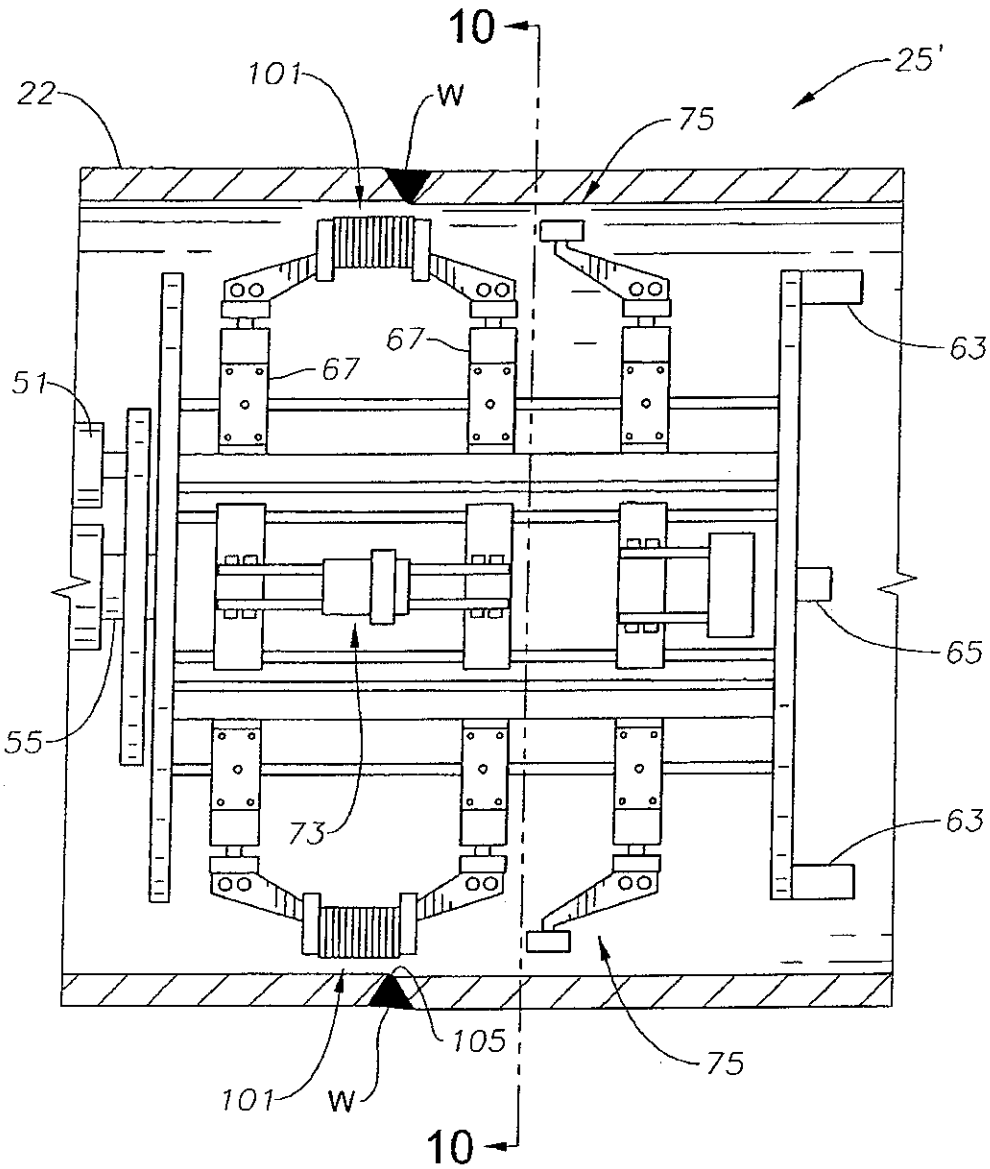

Fig. 9

Fig. 10

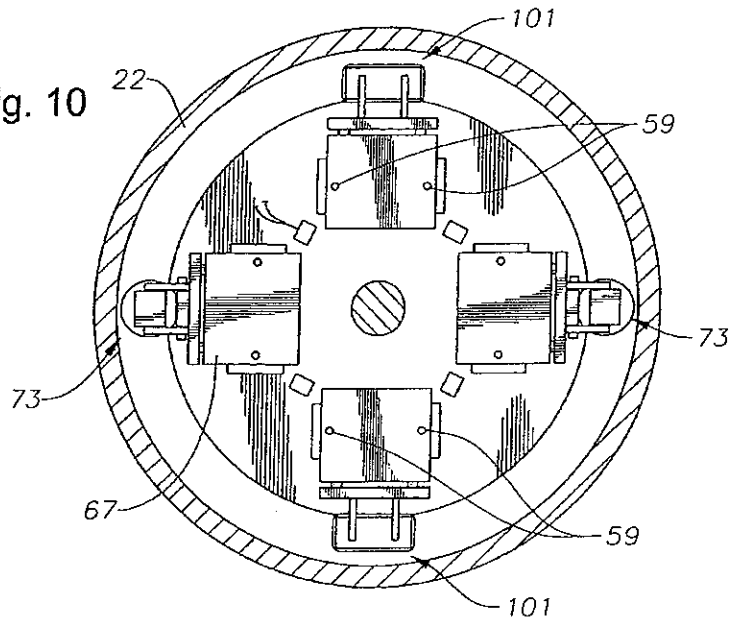
101
22
59
73
73
67
59
101

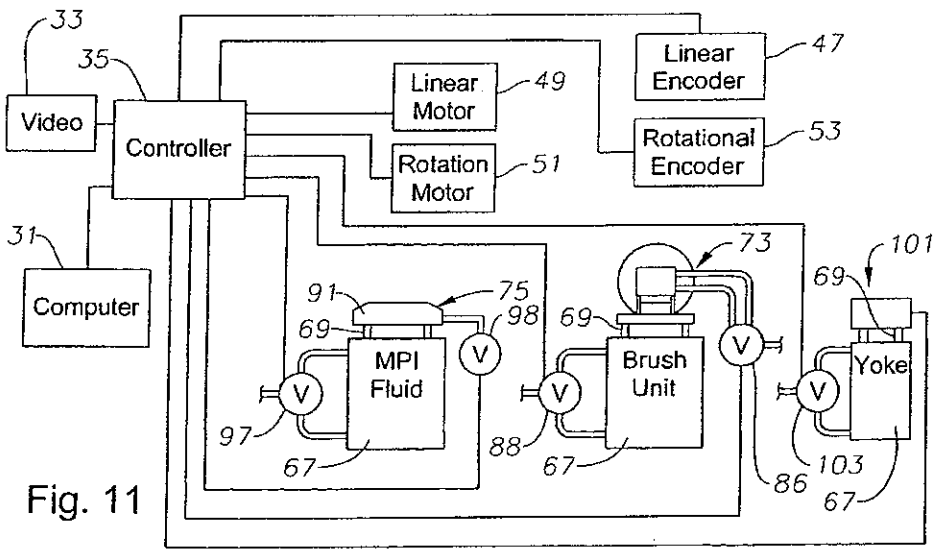
33
35
Video
Controller
Linear Motor
49
Rotation Motor
51
Linear Encoder
47
Rotational Encoder
53
31
Computer
91
75
98
69
MPI Fluid
V
97
67
73
69
Brush Unit
88
67
101
69
Yoke
103
67
86

Fig. 11

Fig. 12

Abbreviated External Magnetic Field Procedure

Step 1: Prepare inspection apparatus

Step 2: Load the inspection apparatus and set linear encoder

Step 3: Advance inspection apparatus down inner diameter of the pipe and locate center of weld with onboard video device

Step 4: Position wire wheel brushes over the weld

Step 5: Actuate cylinder rods to position wire wheel brush in contact with the weld

Step 6: Actuate pneumatic motors to rotate wire wheel brushes

Step 7: Rotate head unit back and forth until weld area is clean

Step 8: Position MPI medium dispensers adjacent the weld and apply MPI medium through an MPI supply system

Step 9: Position video cameras adjacent the weld

Step 10: Activate MPI magnetic unit to establish magnetic field and magnetize inspection area

Step 11: Activate artificial light source

Step 12: Rotate head unit to position video cameras along the inner diameter of the weld area

Step 13: View, record, and store the video output of the reach of the video cameras

Step 14: Calculate weld offset

Step 15: Repeat steps 3 to 14 on next weld until pipe inspection complete

Step 16: Actuate the linear motor to retrieve the inspection apparatus

Fig. 13

Abbreviated Internal Magnetic Field Procedure

Step 1: Prepare inspection apparatus

Step 2: Load the inspection apparatus and set linear encoder

Step 3: Advance inspection apparatus down inner diameter of the pipe and locate center of weld with onboard video device

Step 4: Position wire wheel brushes over the weld

Step 5: Actuate cylinder rods to position wire wheel brush in contact with the weld

Step 6: Actuate pneumatic motors to rotate wire wheel brushes

Step 7: Rotate head unit back and forth until weld area is clean

Step 8: Position magnetic yoke adjacent the weld

Step 9: Actuate cylinder rods to position magnetic yoke radially and activate

Step 10: Position MPI medium dispensers as necessary and apply MPI medium through an MPI supply system

Step 11: Activate artificial light source, as necessary

Step 12: View, record, and store the video output of the each of the video cameras

Step 13: Rotate head unit and repeat steps 8 to 11 until weld inspection complete

Step 14: Repeat steps 3 to 12 on next weld until pipe inspection complete

Step 15: Actuate the linear motor to retrieve the inspection apparatus