07/05/03
2003026408

(12) INTERNATIONAL APPLICATION PUBLISHED UNDER THE PATENT COOPERATION TREATY (PCT)

(19) World Intellectual Property Organization
International Bureau

*162162*

(43) International Publication Date
6 June 2002 (06.06.2002)

PCT

(10) International Publication Number
WO 02/43925 A1

(51) International Patent Classification[7]: B24D 11/00, 49/12, B24B 37/04, 21/04

(21) International Application Number: PCT/US01/11841

(22) International Filing Date: 11 April 2001 (11.04.2001)

(25) Filing Language: English

(26) Publication Language: English

(30) Priority Data:
09/726,064 29 November 2000 (29.11.2000) US

(71) Applicant: **3M INNOVATIVE PROPERTIES COMPANY** [US/US]; 3M Center, Post Office Box 33427, Saint Paul, MN 55133-3427 (US).

(72) Inventors: **MUILENBURG, Michael, J.**; Post Office Box 33427, Saint Paul, MN 55133-3427 (US). **KIM, Chong, Yong**; Post Office Box 33427, Saint Paul, MN 55133-3427 (US). **FIZEL, Jerry, J.**; Post Office Box 33427, Saint Paul, MN 55133-3427 (US). **WEBB, Richard, J.**; Post Office Box 33427, Saint Paul, MN 55133-3427 (US). **GAGLIARDI, John, J.**; Post Office Box 33427, Saint Paul, MN 55133-3427 (US). **PENDERGRASS, Daniel, B.**; Post Office Box 33427, Saint Paul, MN 55133-3427 (US). **STREIFEL, Robert, J.**; Post Office Box 33427, Saint Paul, MN 55133-3427 (US). **BRUXVOORT, Wesley, J.**; Post Office Box 33427, Saint Paul, MN 55133-3427 (US).

(74) Agents: **PASTIRIK, Daniel, R.** et al.; Office of Intellectual Property Counsel, Post Office Box 33427, Saint Paul, MN 55133-3427 (US).

(81) Designated States *(national)*: AE, AG, AL, AM, AT, AT (utility model), AU, AZ, BA, BB, BG, BR, BY, BZ, CA, CH, CN, CO, CR, CU, CZ, CZ (utility model), DE, DE (utility model), DK, DK (utility model), DM, DZ, EE, EE (utility model), ES, FI, FI (utility model), GB, GD, GE, GH, GM, HR, HU, ID, IL, IN, IS, JP, KE, KG, KP, KR, KZ, LC, LK, LR, LS, LT, LU, LV, MA, MD, MG, MK, MN, MW, MX, MZ, NO, NZ, PL, PT, RO, RU, SD, SE, SG, SI, SK, SK (utility model), SL, TJ, TM, TR, TT, TZ, UA, UG, UZ, VN, YU, ZA, ZW.

(84) Designated States *(regional)*: ARIPO patent (GH, GM, KE, LS, MW, MZ, SD, SL, SZ, TZ, UG, ZW), Eurasian patent (AM, AZ, BY, KG, KZ, MD, RU, TJ, TM), European patent (AT, BE, CH, CY, DE, DK, ES, FI, FR, GB, GR, IE, IT, LU, MC, NL, PT, SE, TR), OAPI patent (BF, BJ, CF, CG, CI, CM, GA, GN, GW, ML, MR, NE, SN, TD, TG).

**Published:**
— *with international search report*

*For two-letter codes and other abbreviations, refer to the "Guidance Notes on Codes and Abbreviations" appearing at the beginning of each regular issue of the PCT Gazette.*

(54) Title: ABRASIVE ARTICLE HAVING A WINDOW SYSTEM FOR POLISHING WAFERS, AND METHODS

*ACTION*

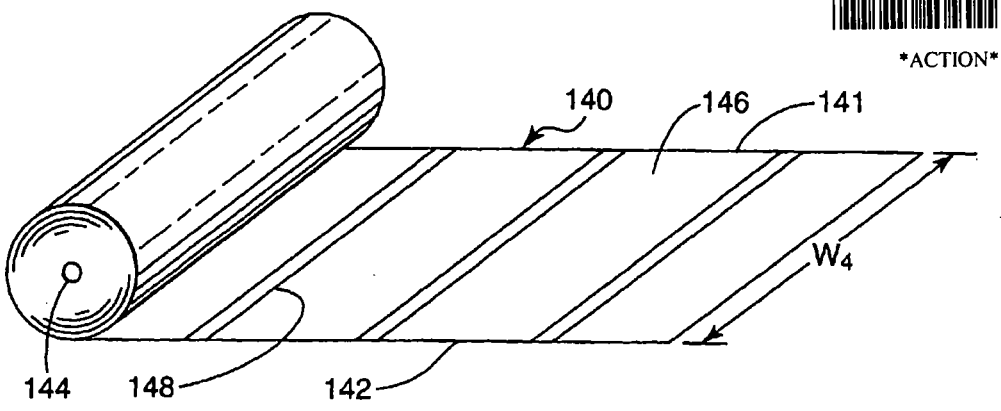


(57) Abstract: A process for planarizing, polishing, or providing other modification of a wafer surface (22) or other workpiece. The process includes using an abrasive article (140) having a textured abrasive coating affixed (146) to a backing. The abrasive article includes a monitoring element, such as a window (148), to allow transmission of radiation therethrough. The radiation level is monitored throughout the planarization process to determine the approach of the desired endpoint. The window in the abrasive coating can be an area devoid of abrasive coating or having minimal or a thinned abrasive coating.

WO 02/43925 A1