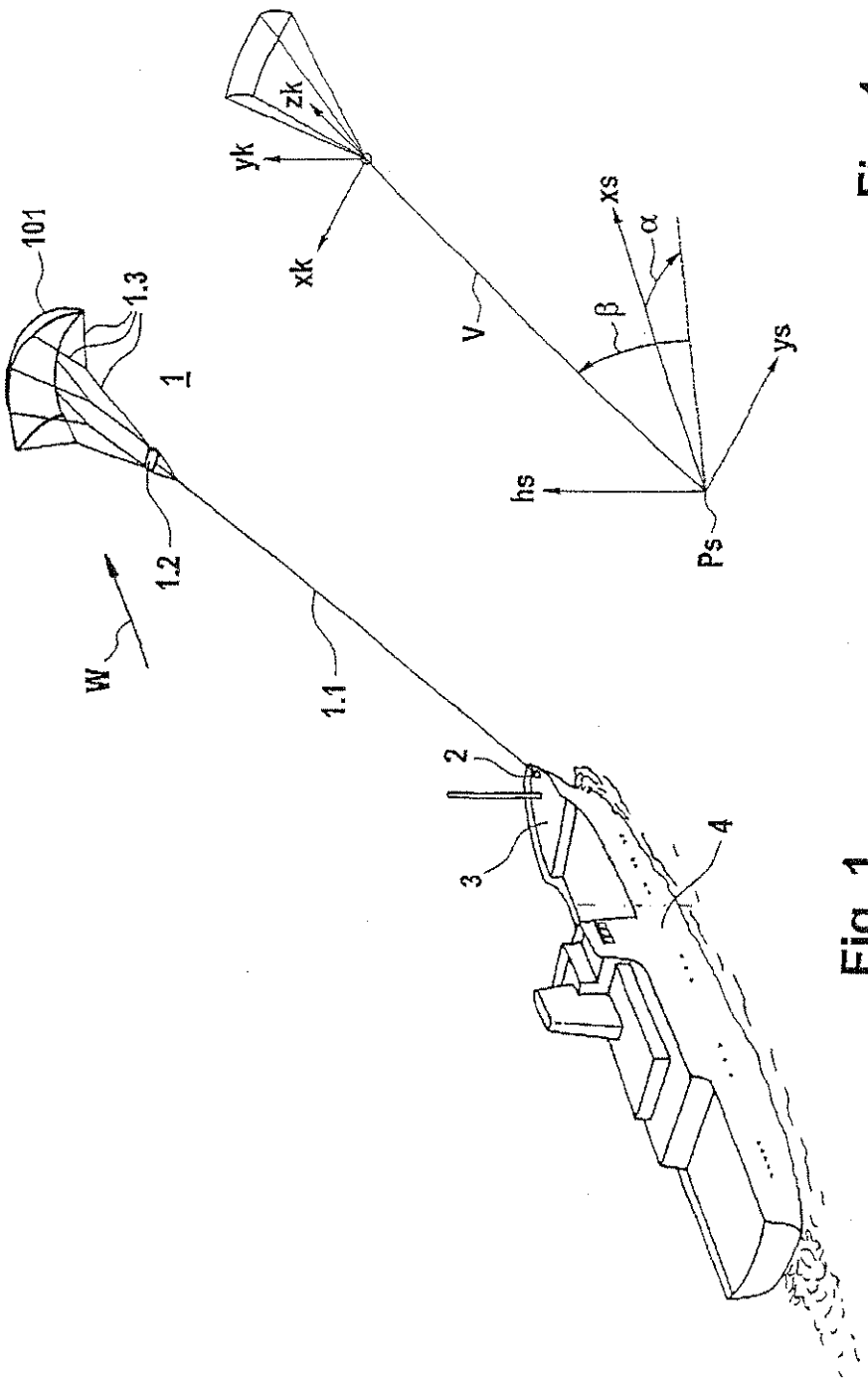


Fig. 1

Fig. 1a

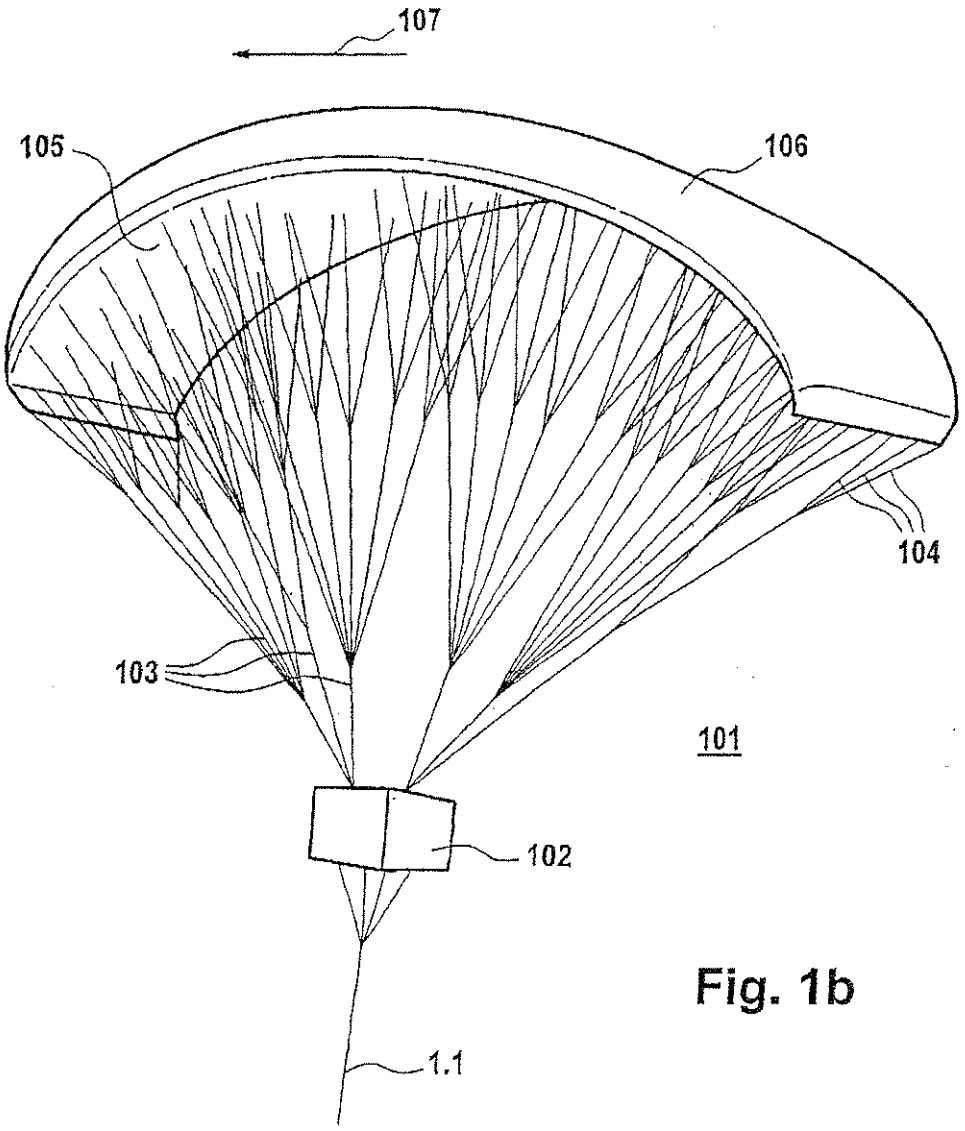


Fig. 1b

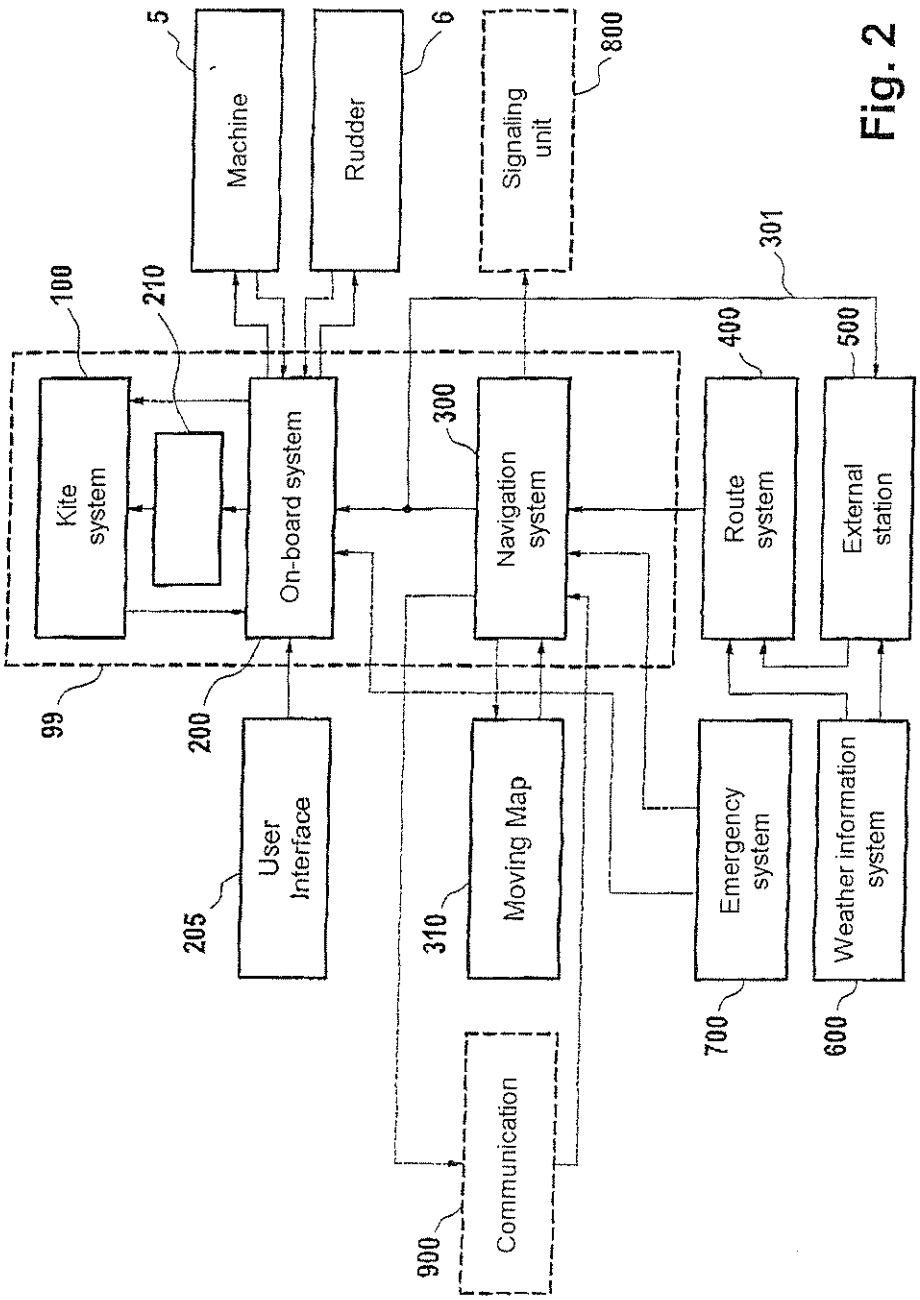
5
Machine
6
Rudder
800
Signaling unit
301
100
210
400
500
Kite system
On-board system
300
Navigation system
Route system
External station
99
200
205
User Interface
310
Moving Map
Emergency system
Weather information system
700
600
900
Communication

Fig. 2

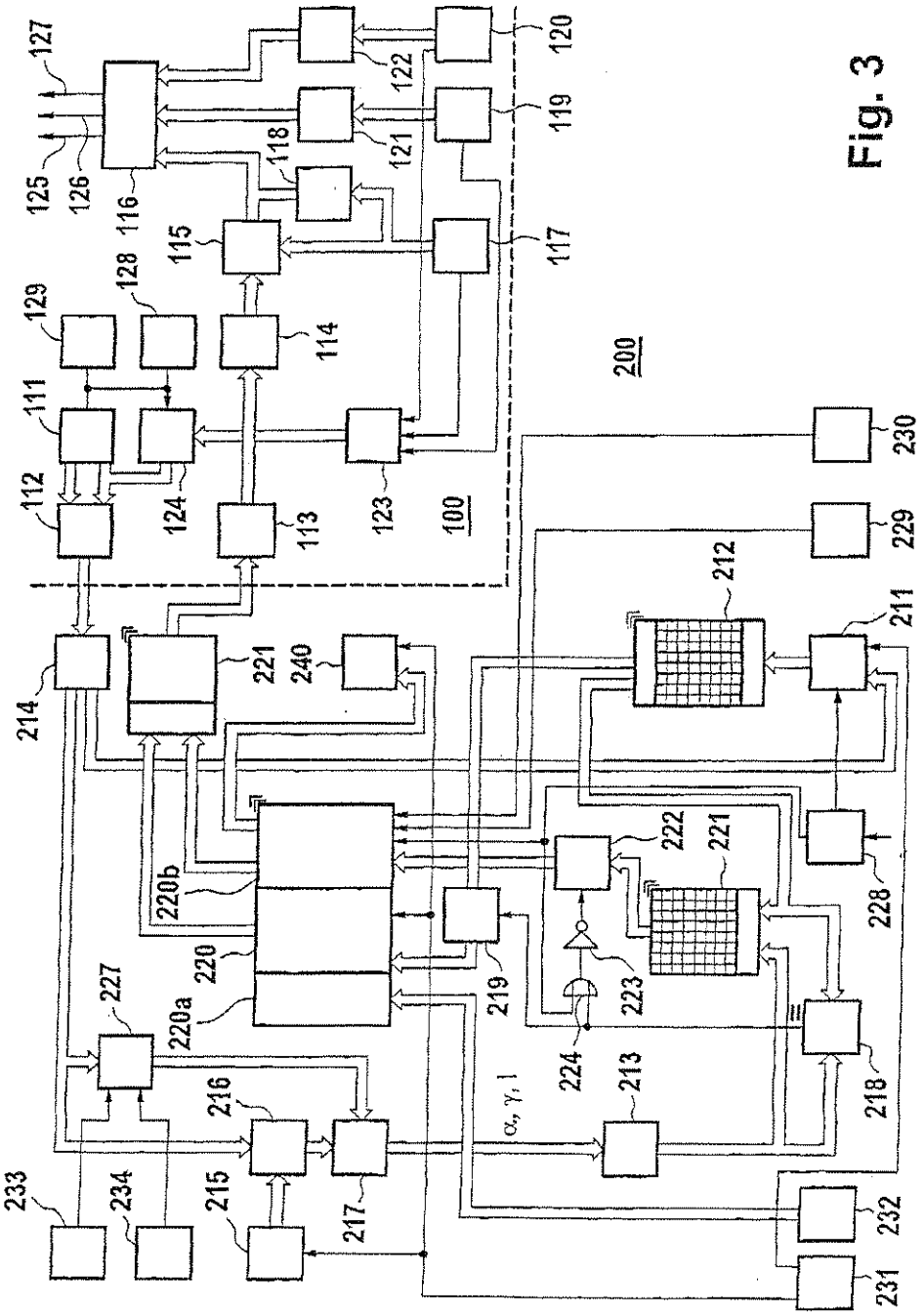


Fig. 3

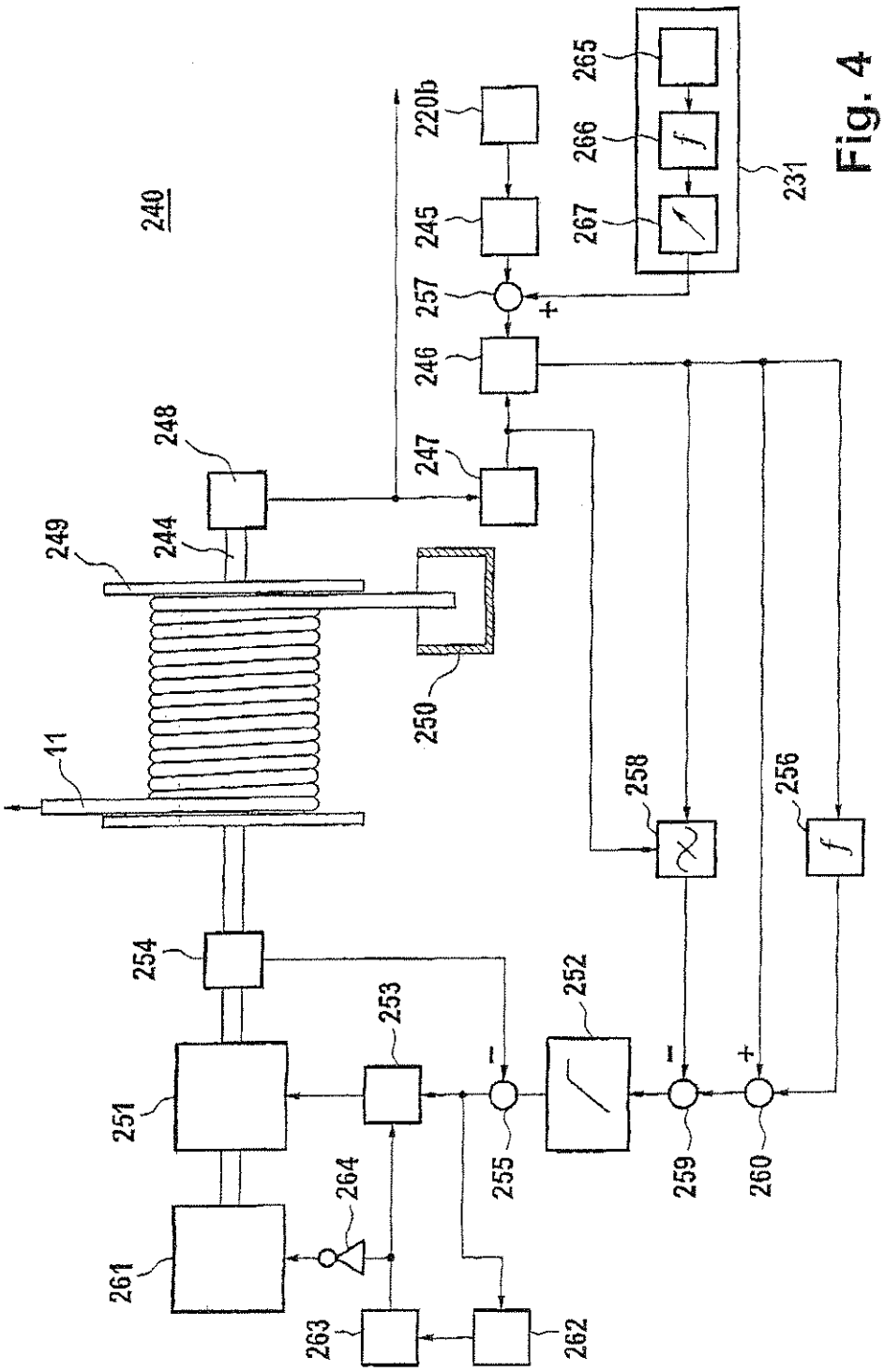
240
11
249
244
248
250
247
246
257
245
220b
265
266
267
231
254
253
252
251
255
259
260
258
256
264
261
263
262

Fig. 4