FIG. 1

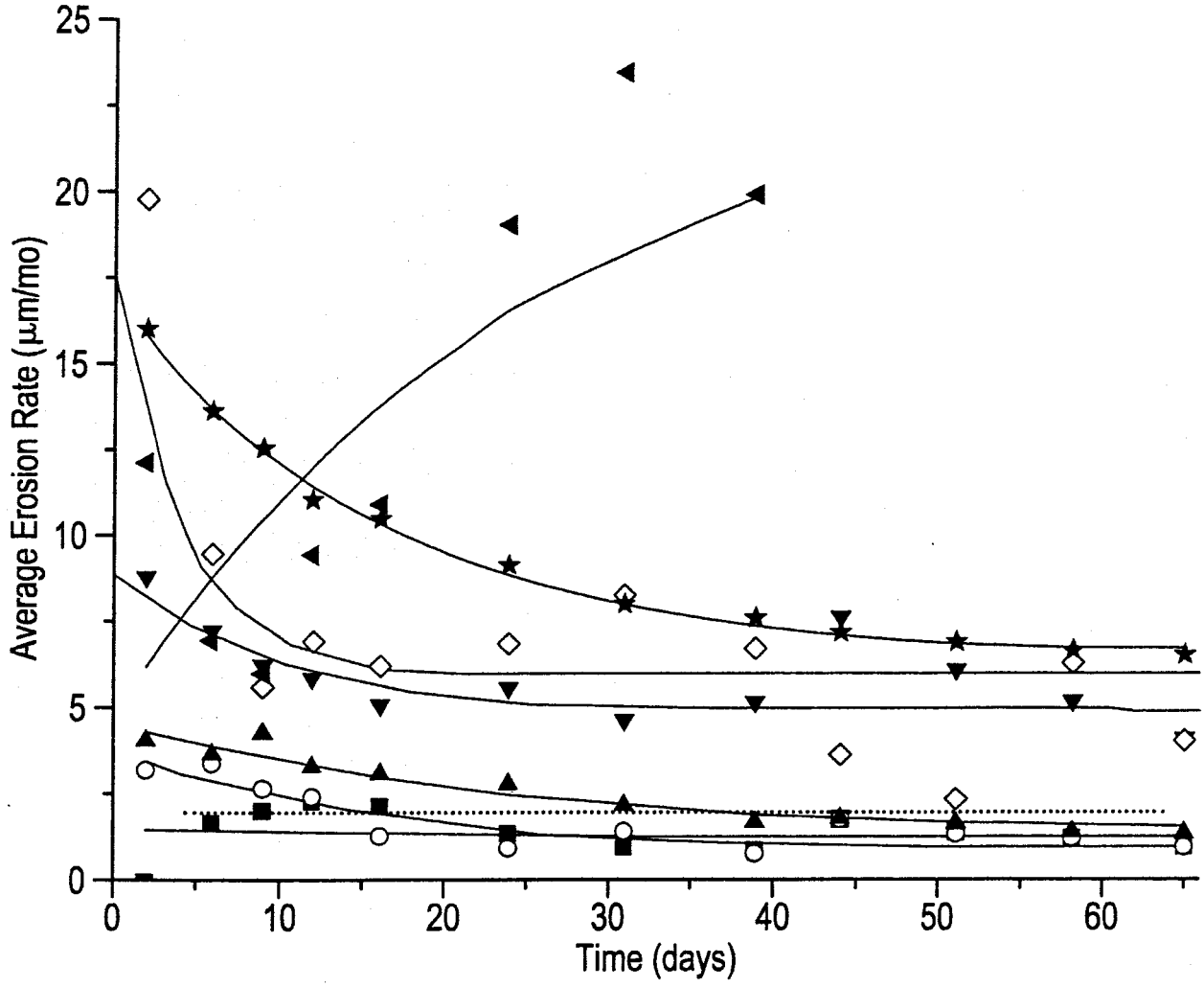

- ■ 5 mole % TPSMA
- ○ 6 mole % TPSMA
- ▲ 9 mole % TPSMA
- ▼ 16 mole % TPSMA
- ◇ 20 mole % TPSMA
- ◀ 25 mole % TPSMA
- ★ BioMet 304

FIG. 2

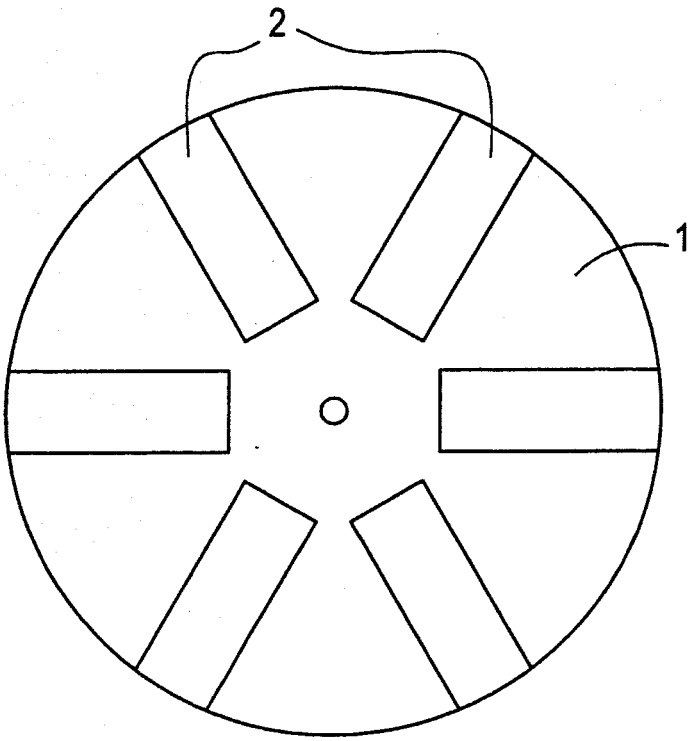

FIG. 3

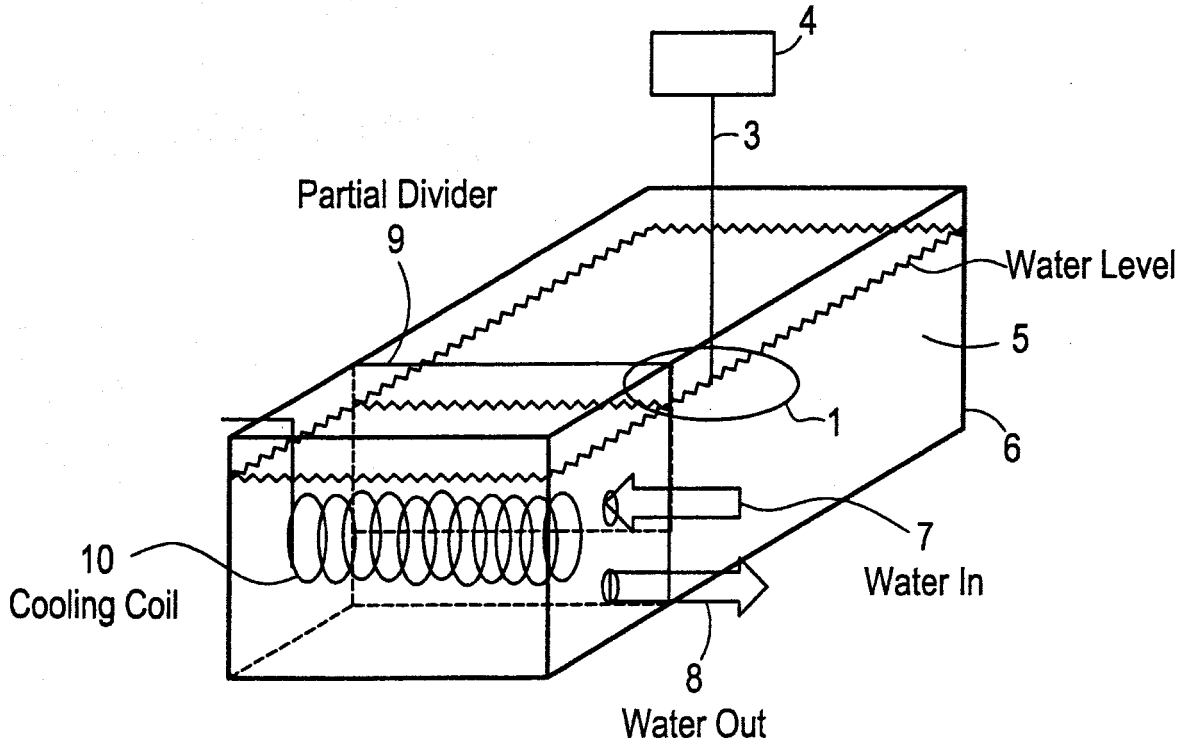
4
3
Partial Divider
9
Water Level
5
1
6
7
Water In
10
Cooling Coil
8
Water Out