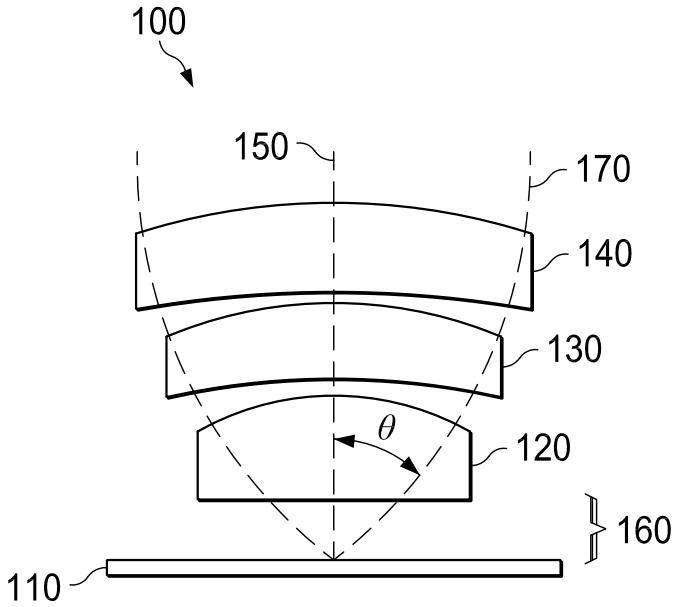

FIG. 1
(PRIOR ART)

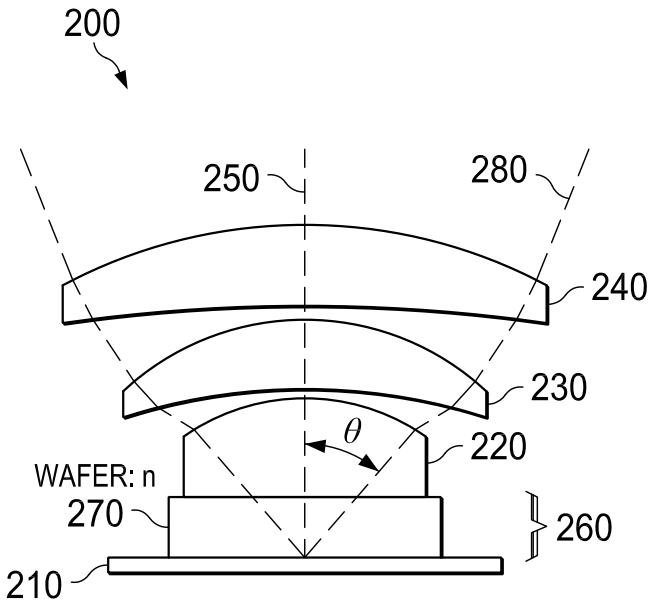

FIG. 2
(PRIOR ART)

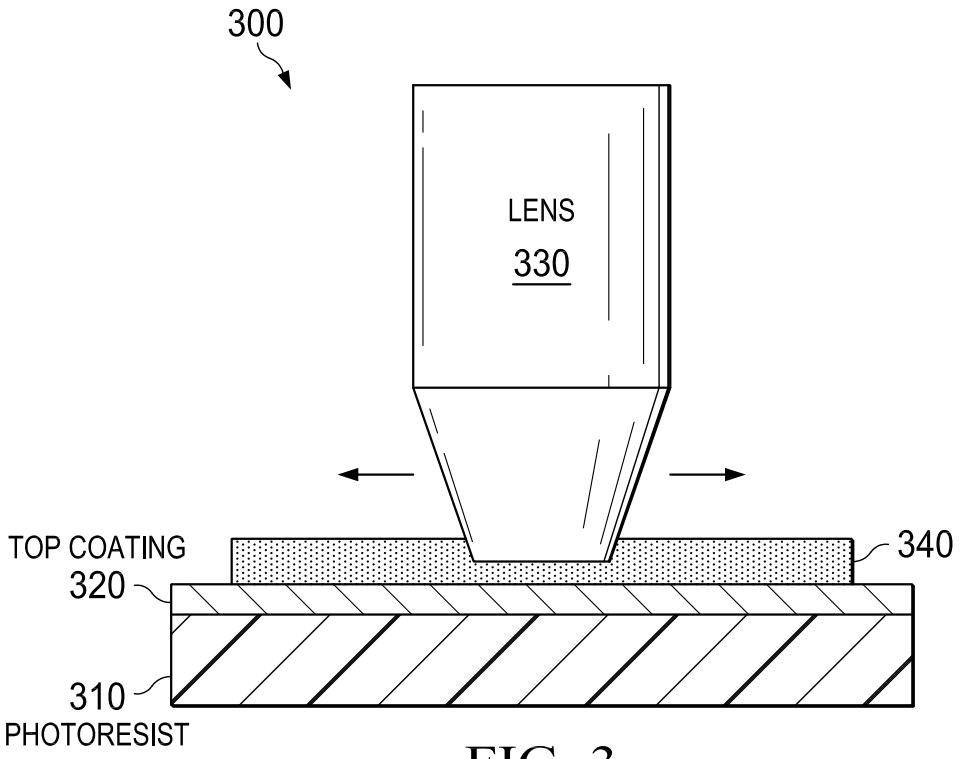

FIG. 3
(PRIOR ART)

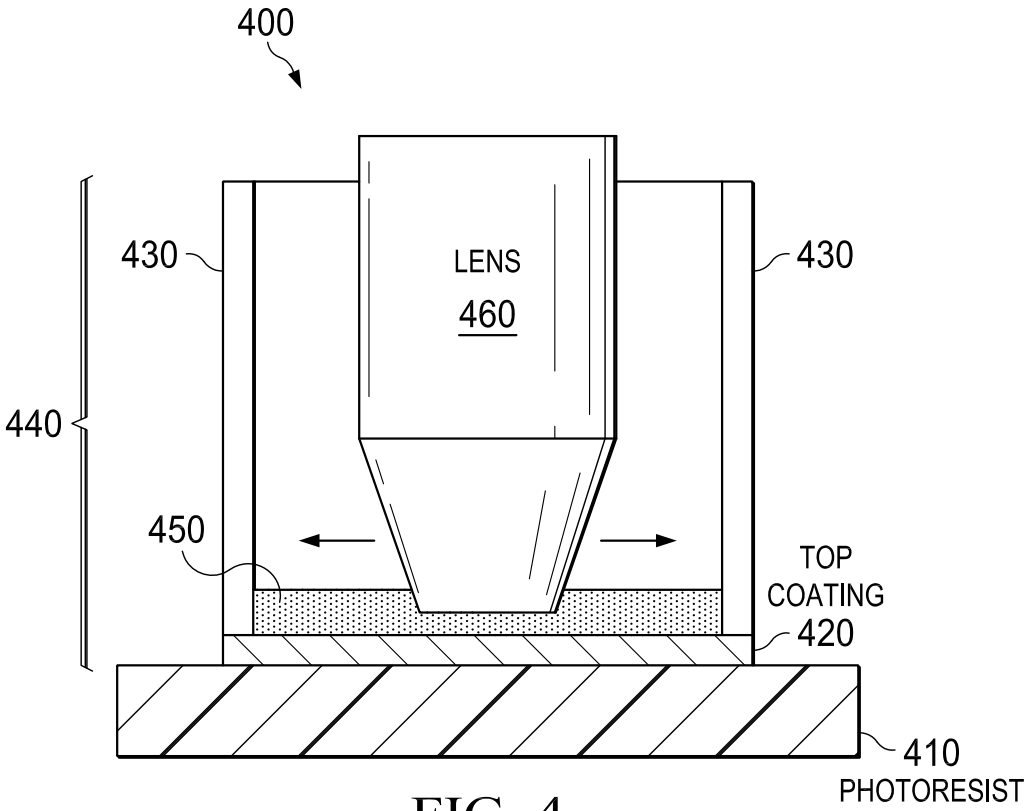

FIG. 4

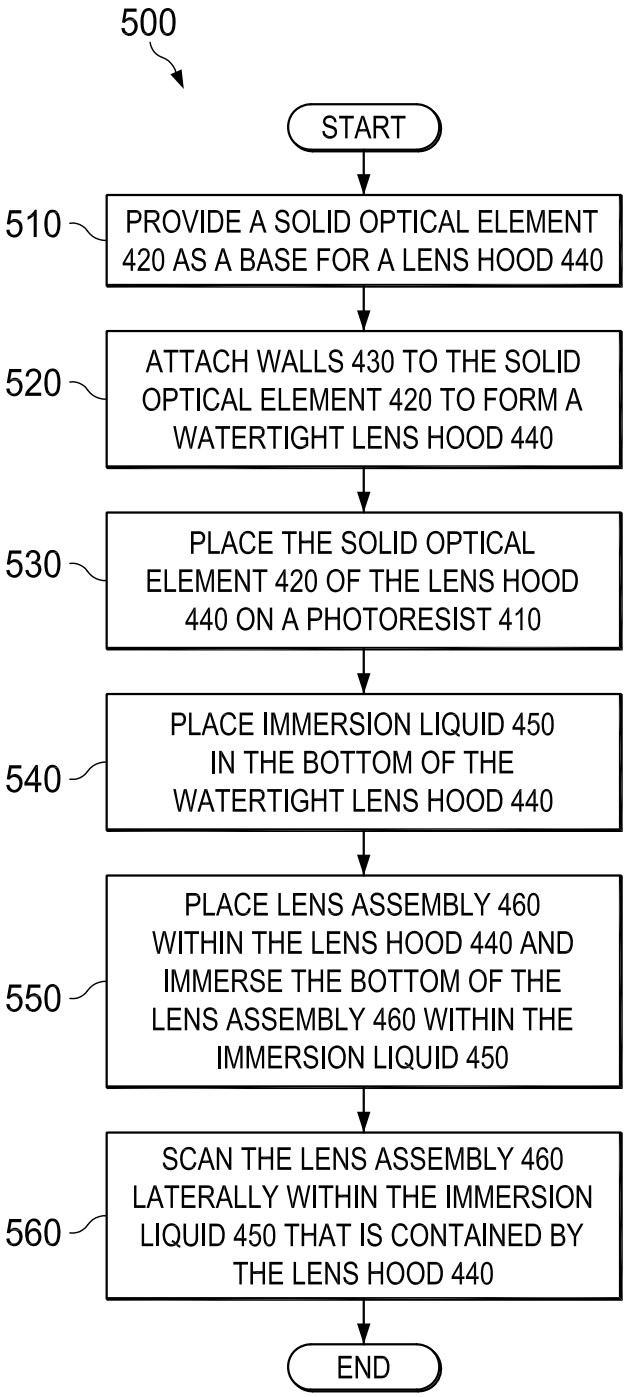
500
START
510
PROVIDE A SOLID OPTICAL ELEMENT 420 AS A BASE FOR A LENS HOOD 440
520
ATTACH WALLS 430 TO THE SOLID OPTICAL ELEMENT 420 TO FORM A WATERTIGHT LENS HOOD 440
530
PLACE THE SOLID OPTICAL ELEMENT 420 OF THE LENS HOOD 440 ON A PHOTORESIST 410
540
PLACE IMMERSION LIQUID 450 IN THE BOTTOM OF THE WATERTIGHT LENS HOOD 440
550
PLACE LENS ASSEMBLY 460 WITHIN THE LENS HOOD 440 AND IMMERSE THE BOTTOM OF THE LENS ASSEMBLY 460 WITHIN THE IMMERSION LIQUID 450
560
SCAN THE LENS ASSEMBLY 460 LATERALLY WITHIN THE IMMERSION LIQUID 450 THAT IS CONTAINED BY THE LENS HOOD 440
END

FIG. 5