Fig. 1

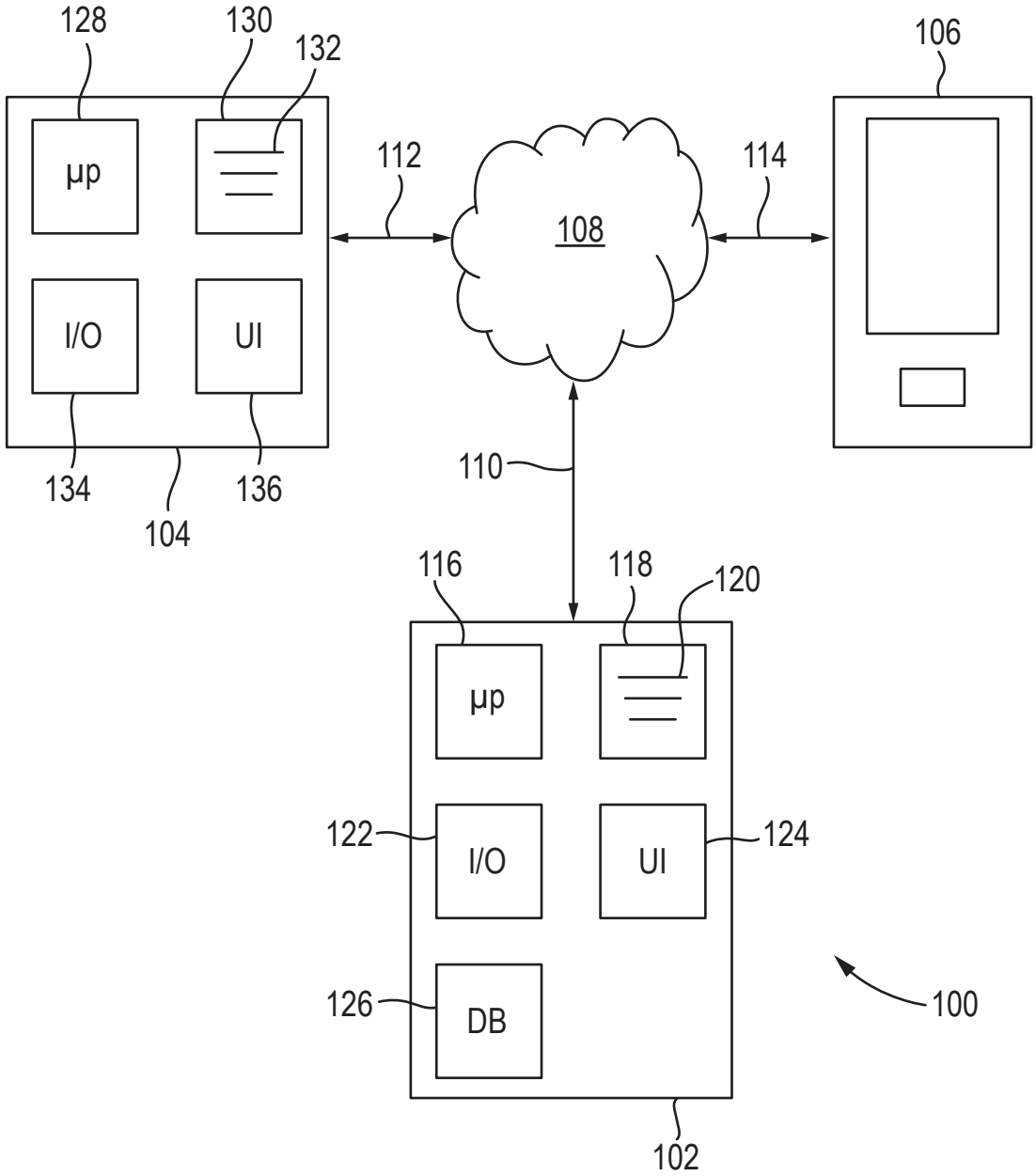
128
130
132
106
µp
112
114
108
I/O
UI
110
134
136
104
116
118
120
µp
122
I/O
UI
124
126
DB
100
102

Fig. 1a

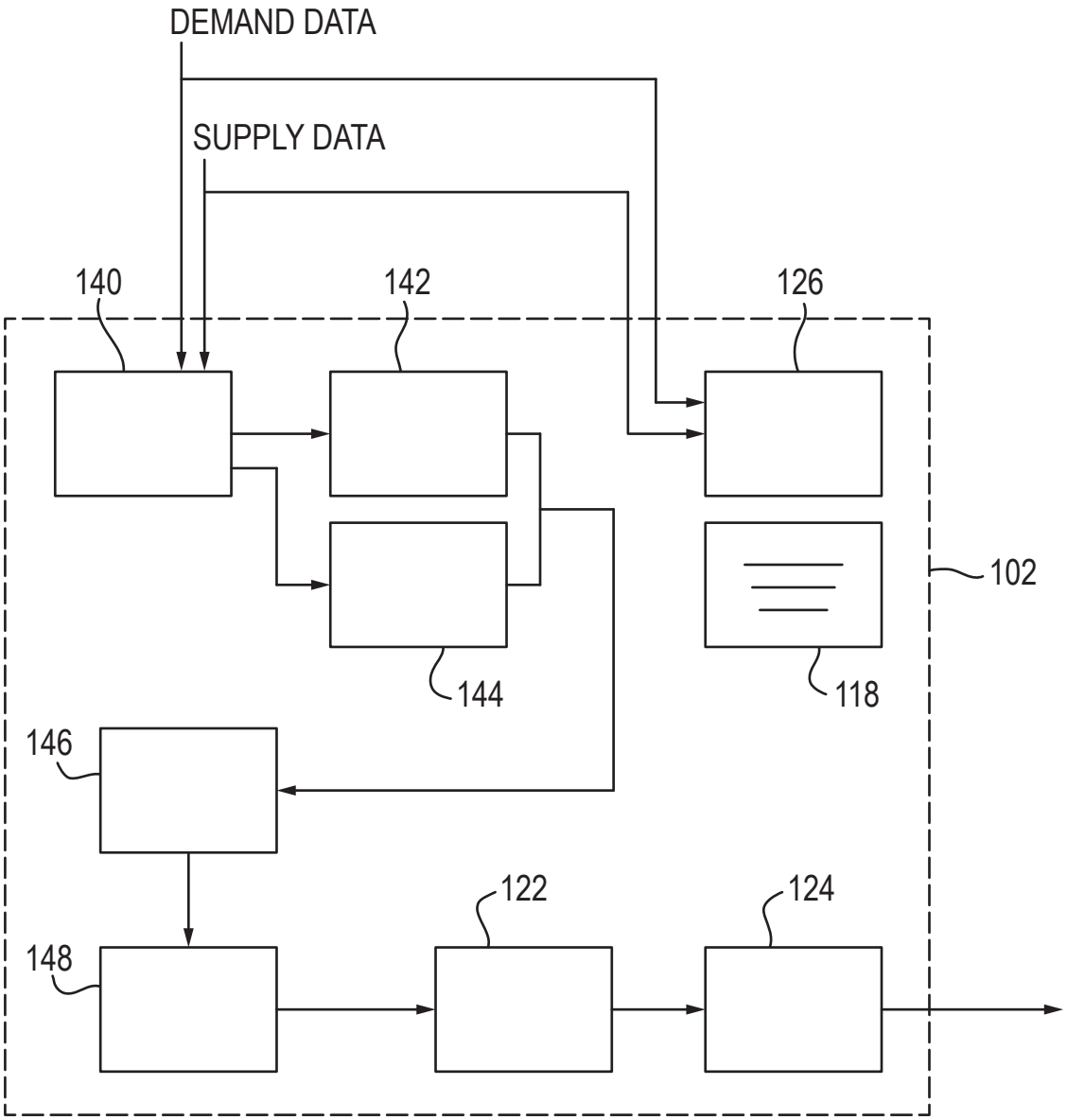
DEMAND DATA
SUPPLY DATA
140
142
126
102
144
118
146
122
124
148

Fig. 2

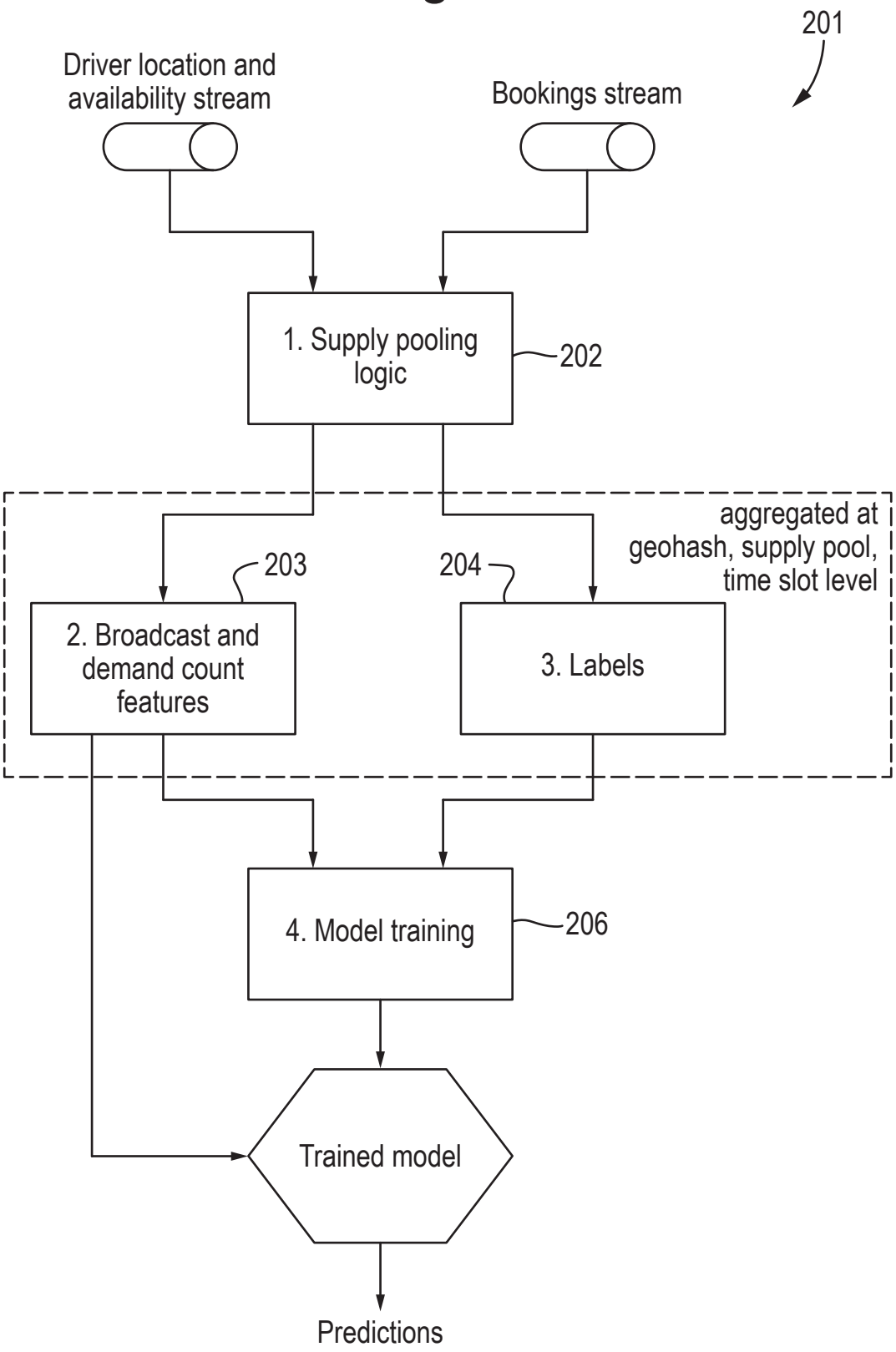
201
Driver location and availability stream
Bookings stream
1. Supply pooling logic
202
aggregated at geohash, supply pool, time slot level
203
204
2. Broadcast and demand count features
3. Labels
4. Model training
206
Trained model
Predictions

Fig. 3

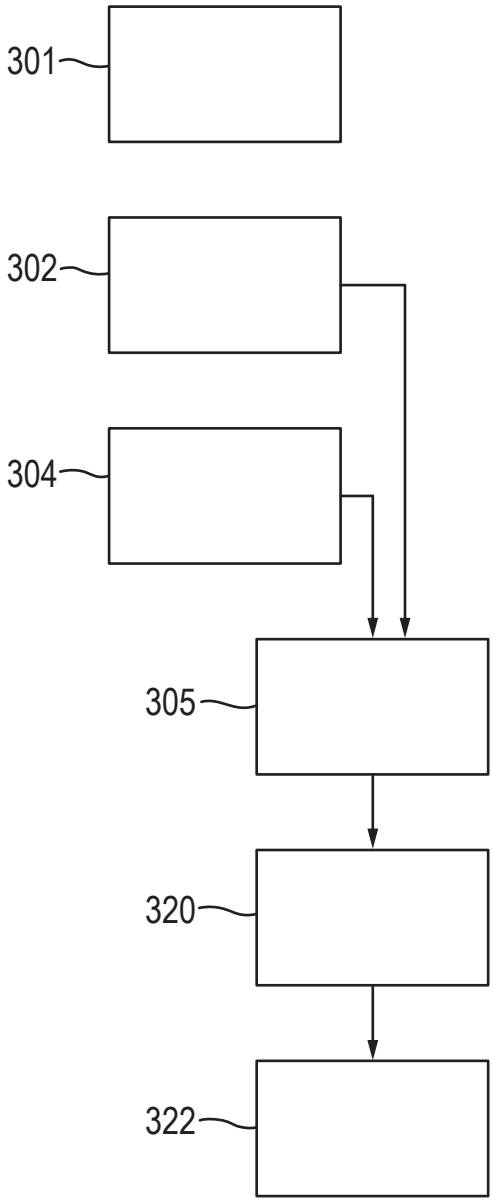

Fig. 3a

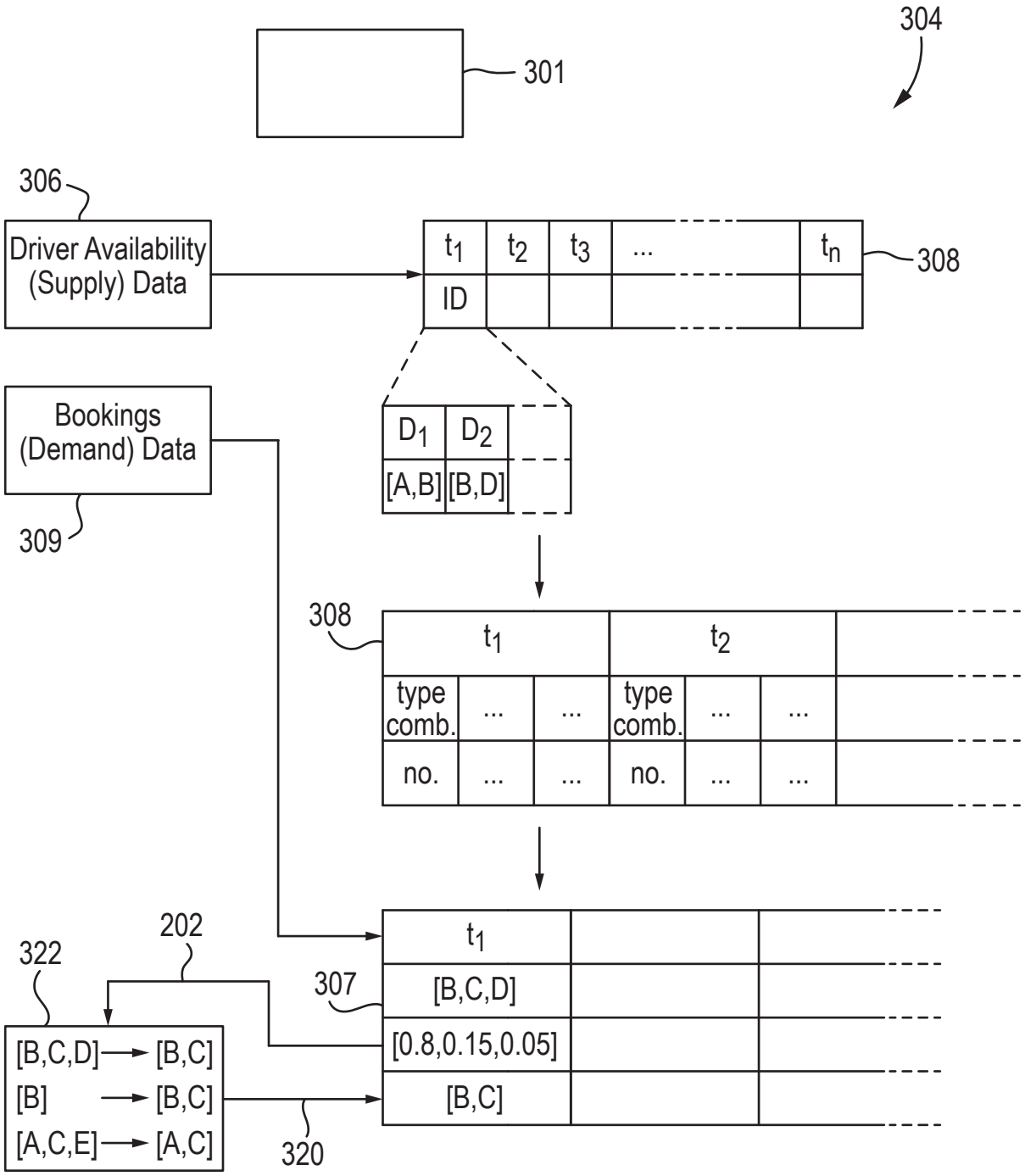
304
301
306
Driver Availability (Supply) Data
t1
t2
t3
...
tn
ID
308
Bookings (Demand) Data
309
D1
D2
[A,B]
[B,D]
308
t1
t2
type comb.
...
...
type comb.
...
...
no.
...
...
no.
...
...
202
322
307
t1
[B,C,D]
[0.8,0.15,0.05]
[B,C]
[B,C,D] → [B,C]
[B] → [B,C]
[A,C,E] → [A,C]
320

Fig. 4

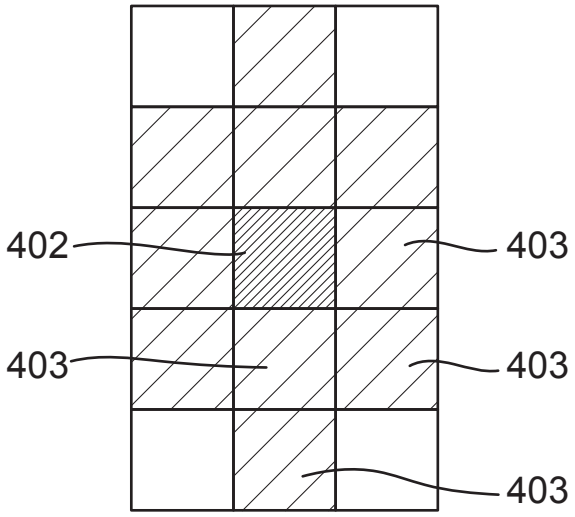

Fig. 4a

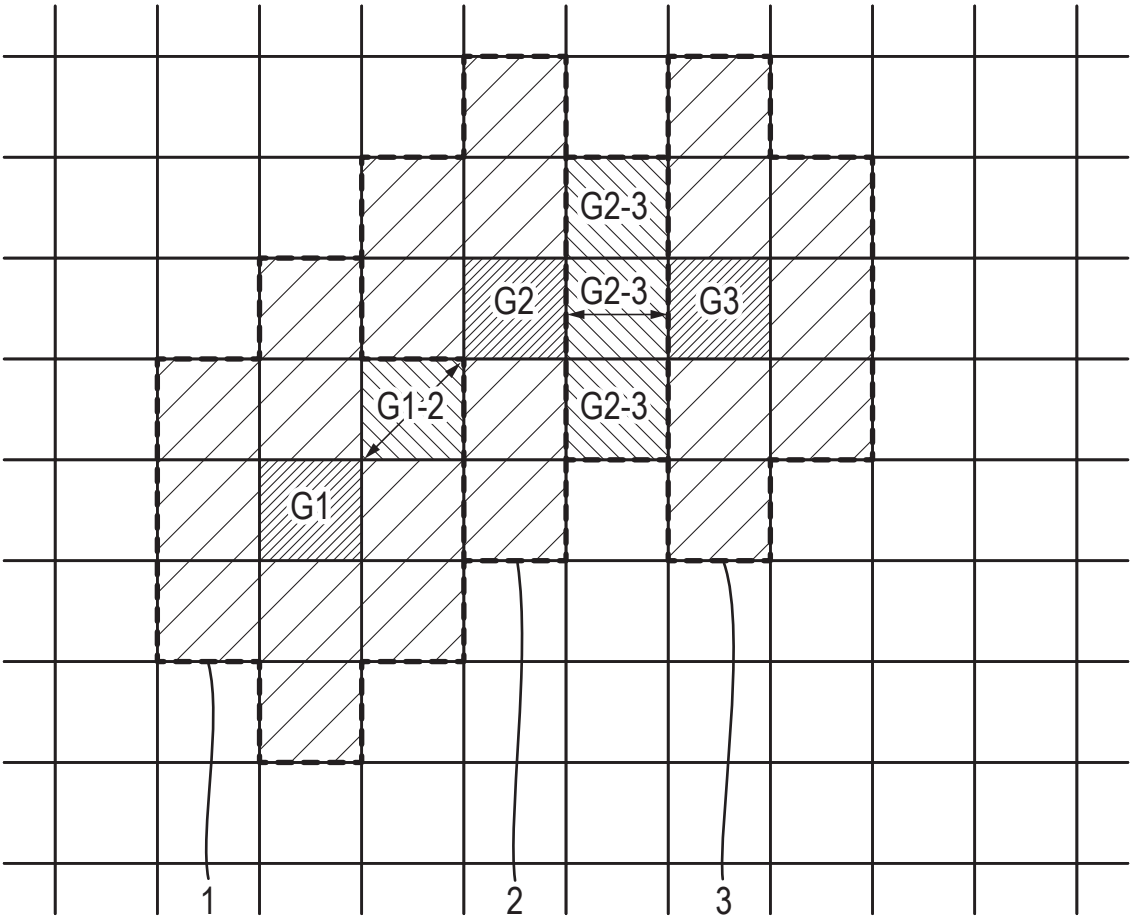

Fig. 4b

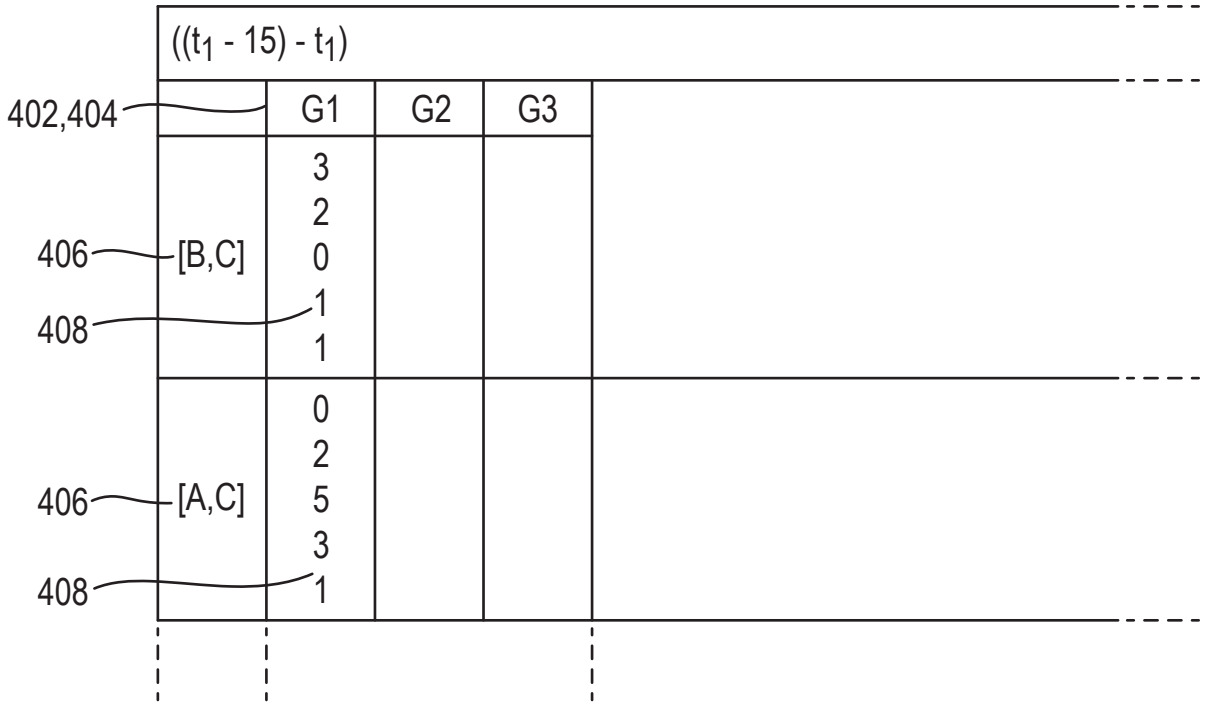

Fig. 5a

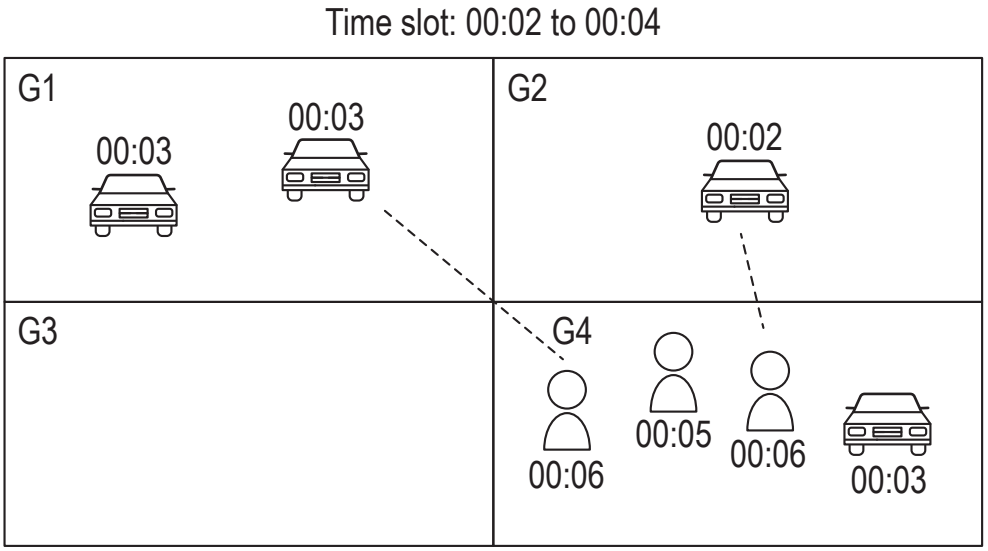

$P_A(Z) = {}^1/_2 = 0.5$

$P_B(Z) = 1/1 = 1$

$P_D(Z) = 0/1 = 0$

Fig. 5b

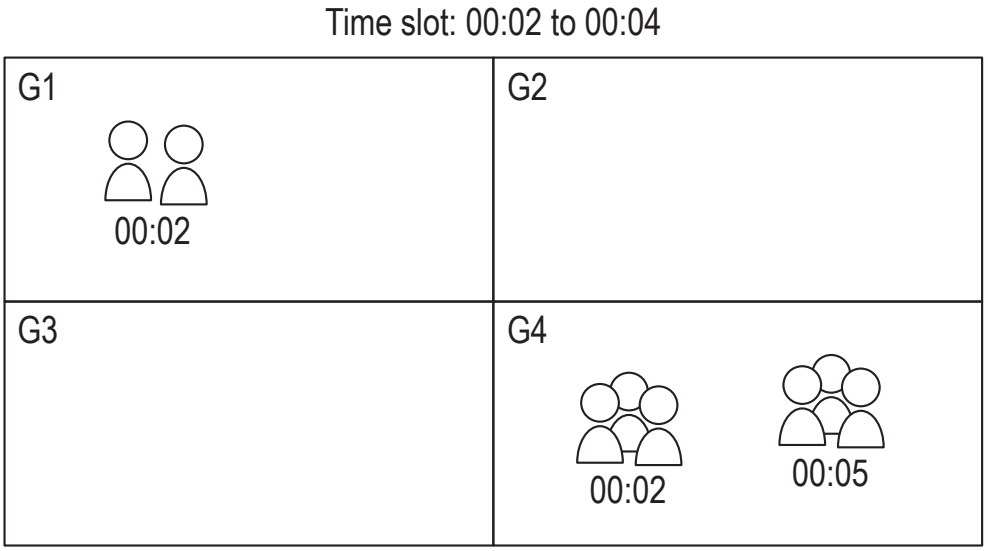

$P_A(Z) = 0$

$P_D(Z) = 0$

Fig. 5c

Time slot: 00:02 to 00:04

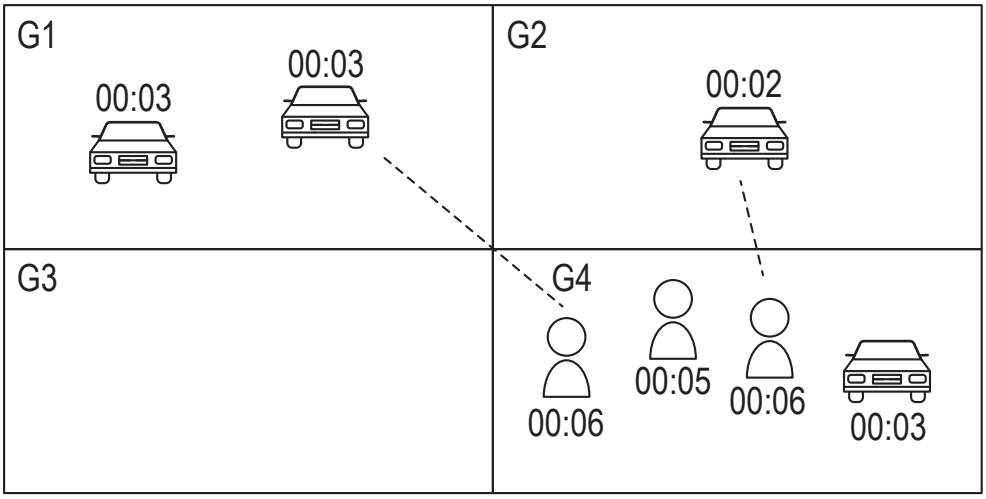

$P_A(Z) = {}^1/_2 = 0.5$

$P_B(Z) = 1/1 = 1$

$P_D(Z) = 3/4 = 0.75$

Fig. 5d

Time slot: 00:02 to 00:04

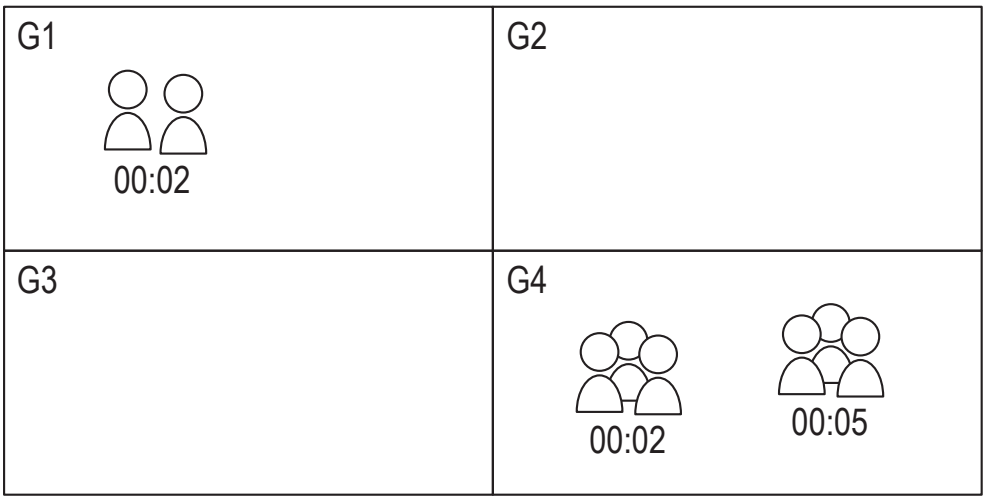

$P_A(Z) = 2/2 = 1$

$P_D(Z) = 6/6 = 1$

Fig. 5e

Time slot: 00:02 to 00:04

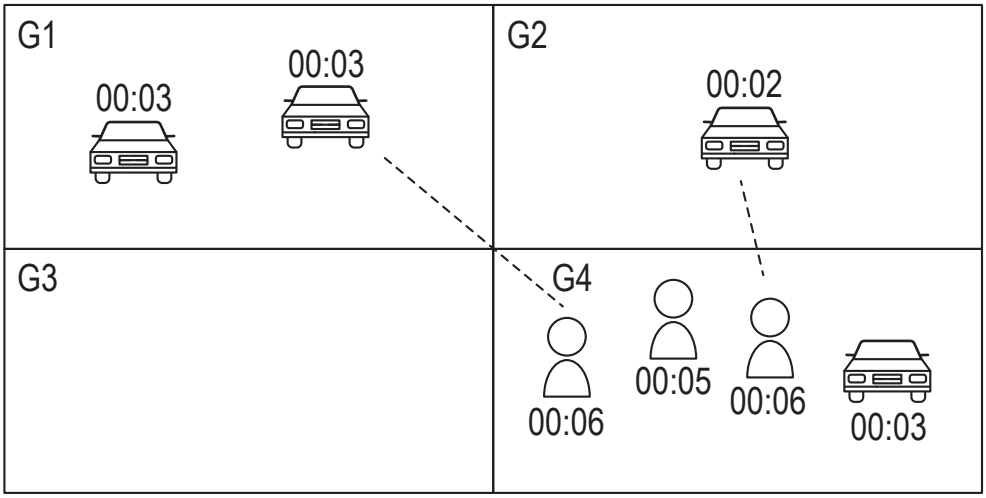

$P_A(Z) = 1/3 = 0.33$

$P_B(Z) = 1/2 = 0.5$

$P_D(Z) = 3/5 = 0.6$

Fig. 5f

Time slot: 00:02 to 00:04

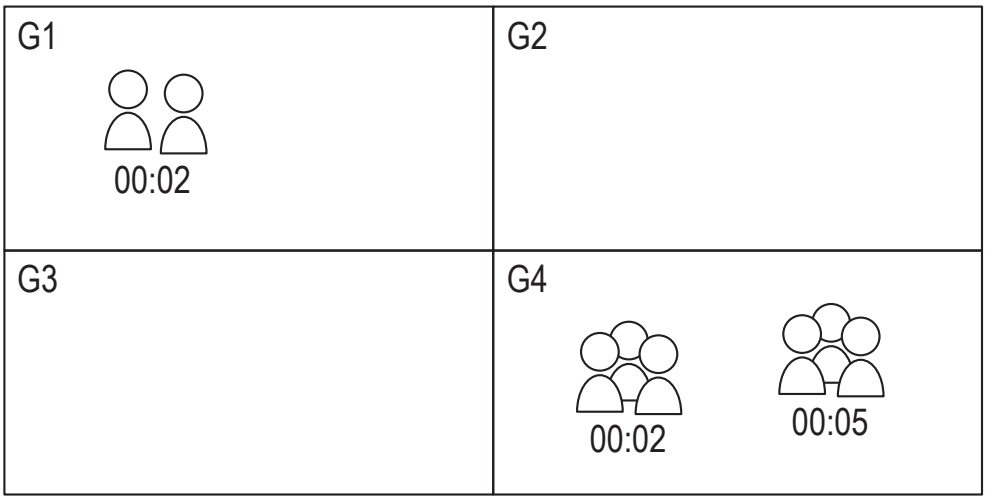

$P_A(Z) = 2/3 = 0.667$

$P_D(Z) = 6/7 = 0.857$

Fig. 5g

$((t_1 - 15) - t_1)$				
	G1	G2	G3	
[B,C]	$P_{t,G1,S_1}$	$P_{t,G2,S_1}$	...	
[A,C]	$P_{t,G1,S_2}$	$P_{t,G2,S_2}$	...	

Fig. 6

	t - Δt to t			
	G1	G2	G3	....
[B,C]				
[A,C]				

(Fig. 4b)

⇔

	t to (t + X)			
	G1	G2	G3	....
[B,C]				
[A,C]				

(Fig. 5g)

Fig. 7

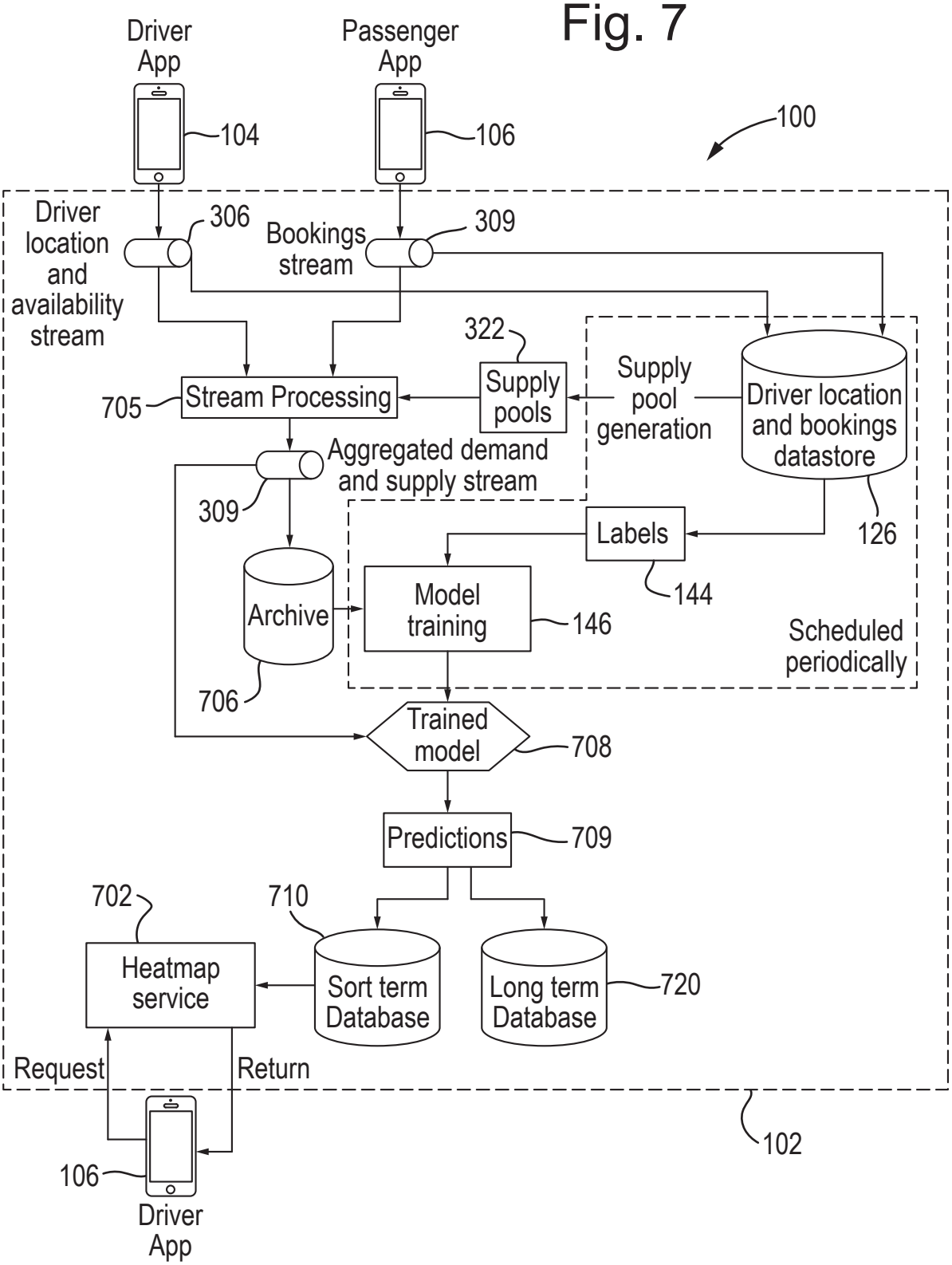
Driver App
Passenger App
104
106
100
Driver location and availability stream
306
Bookings stream
309
322
Supply pools
Supply pool generation
Driver location and bookings datastore
705
Stream Processing
Aggregated demand and supply stream
309
Labels
126
144
Archive
Model training
146
Scheduled periodically
706
Trained model
708
Predictions
709
702
710
Heatmap service
Sort term Database
Long term Database
720
Request
Return
102
106
Driver App

Fig. 7a

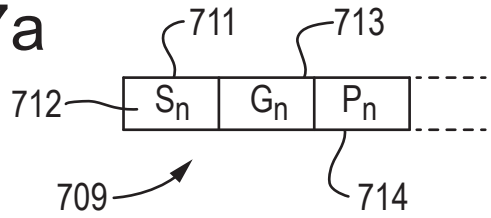
711
713
712
S_n
G_n
P_n
709
714