【FIG. 1】

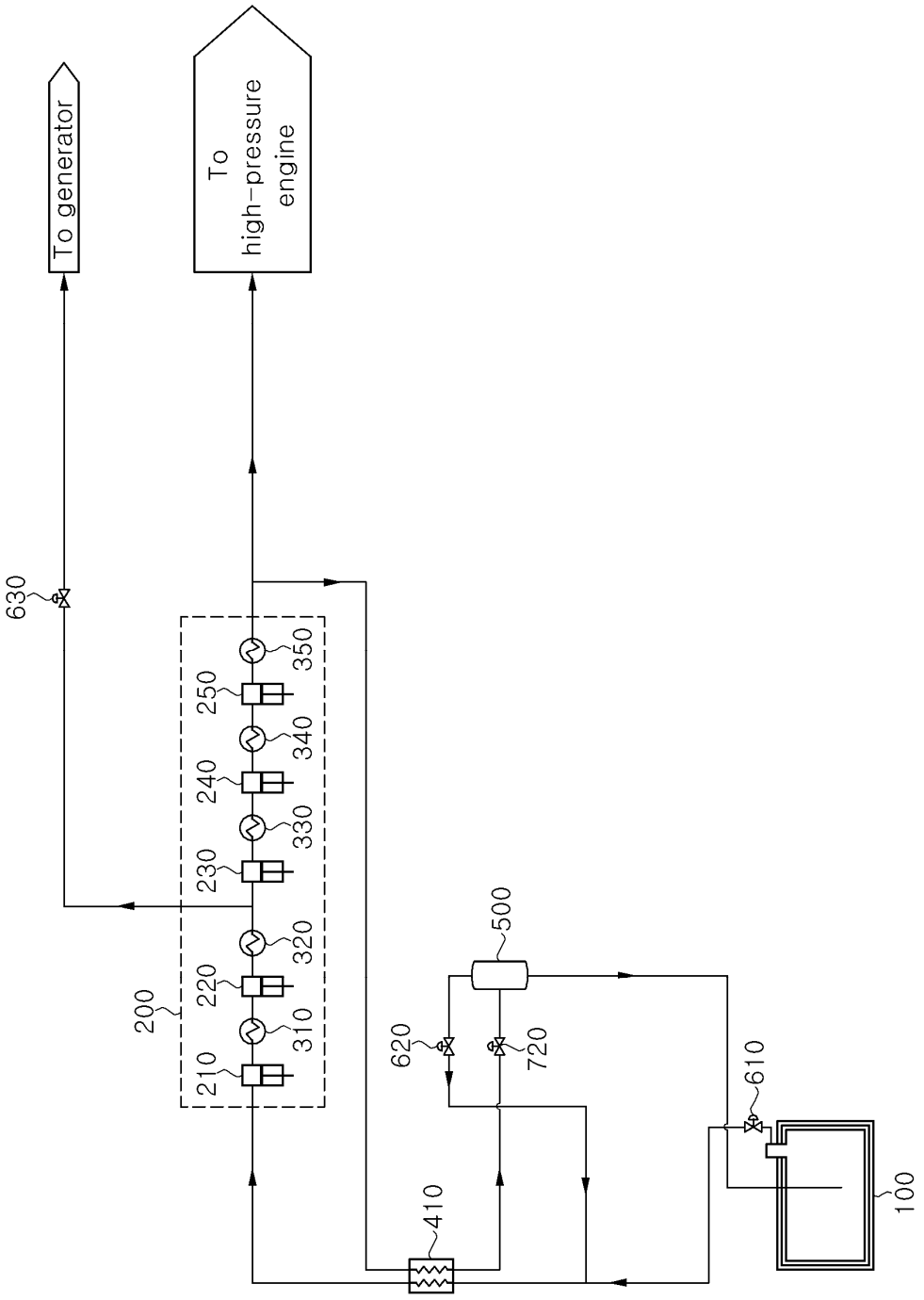
To generator
To high-pressure engine
630
350
250
340
240
330
230
320
220
310
210
200
500
620
720
610
410
100

【FIG. 2】

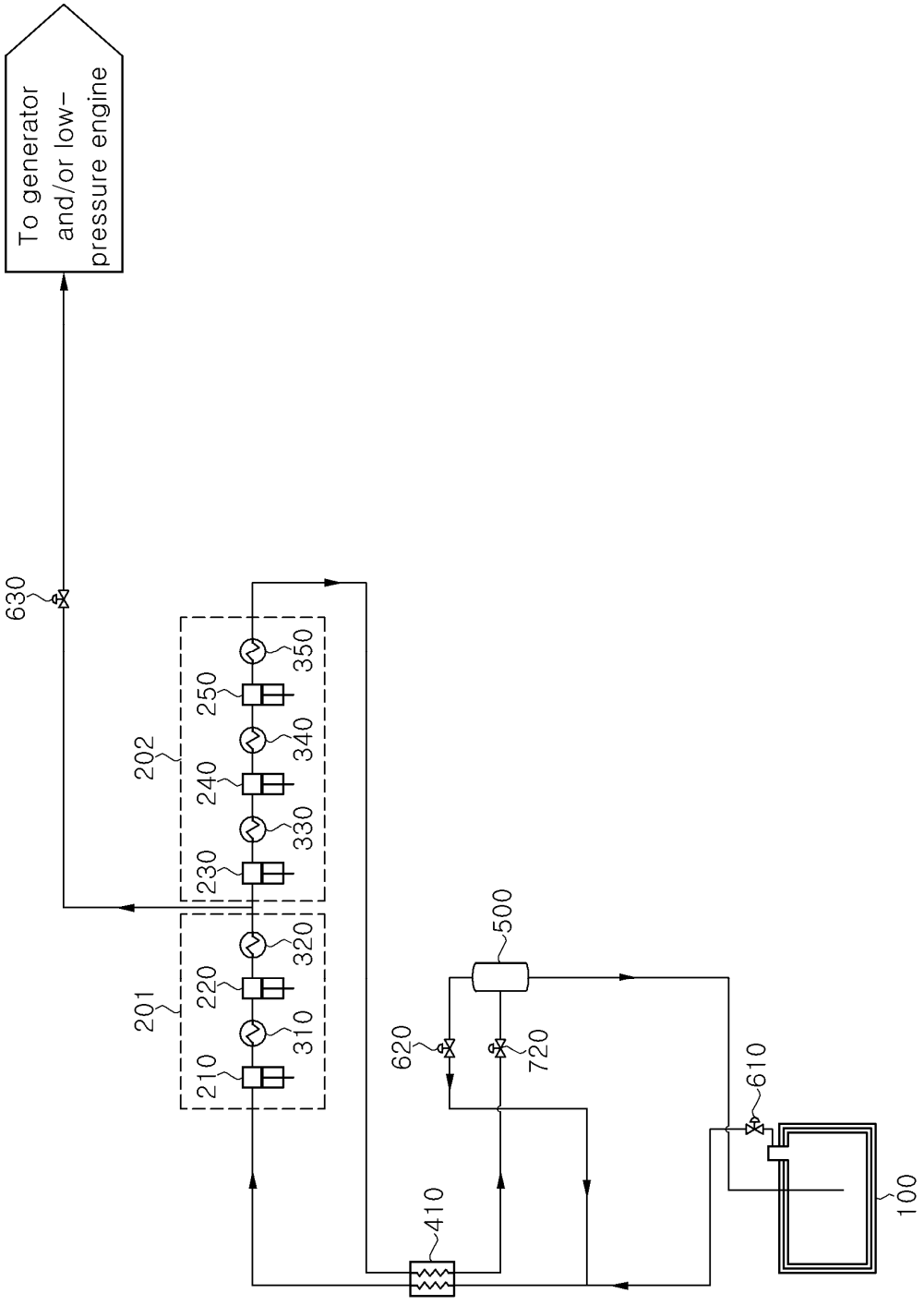
To generator and/or low-pressure engine
630
202
201
210
220
230
240
250
310
320
330
340
350
500
620
720
610
410
100

【FIG. 3】

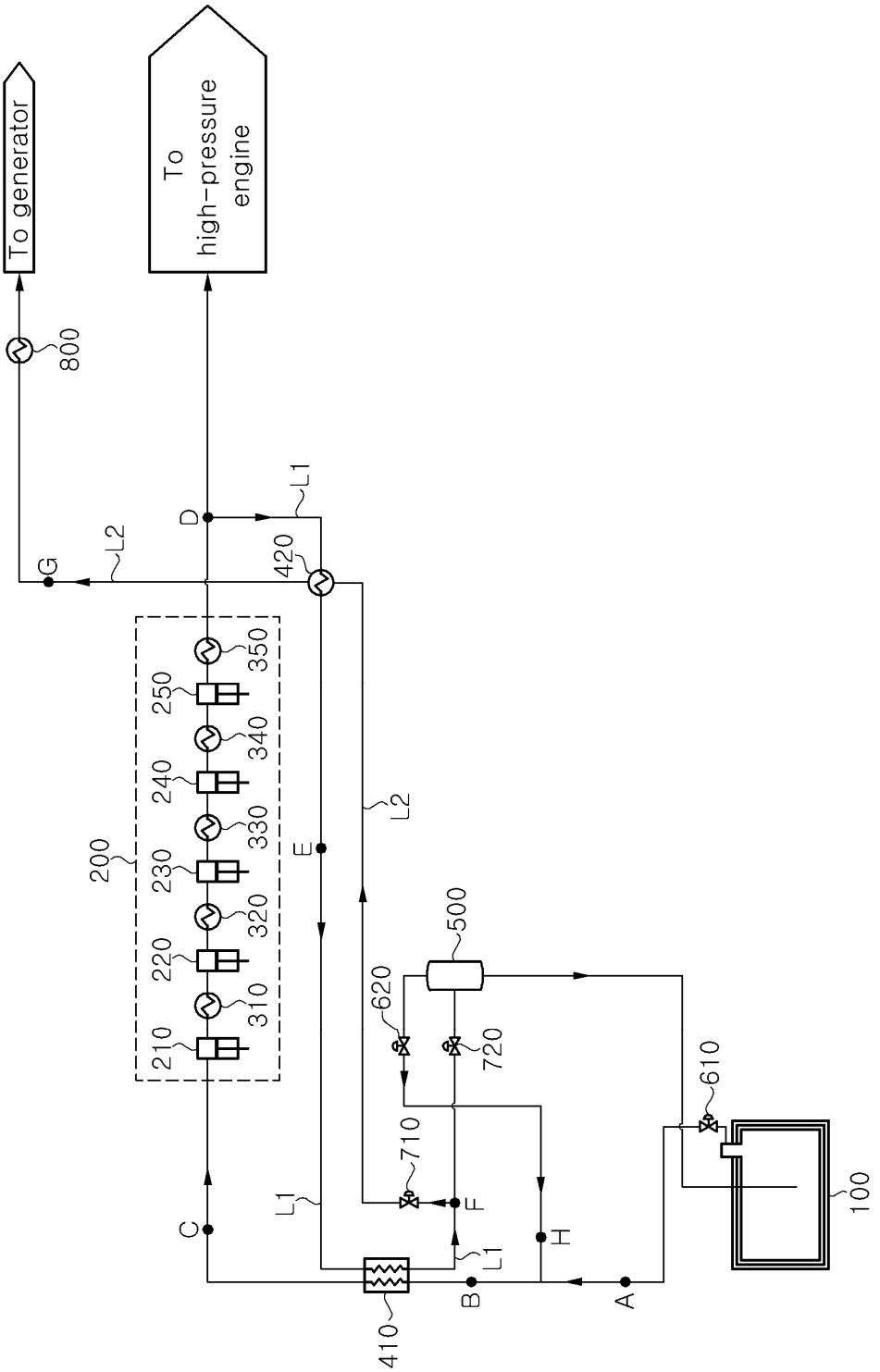
To generator
To high-pressure engine
800
G
L2
D
L1
420
200
210
220
230
240
250
310
320
330
340
350
E
L2
500
620
720
610
710
100
C
L1
F
H
L1
B
A
410

【FIG. 4】

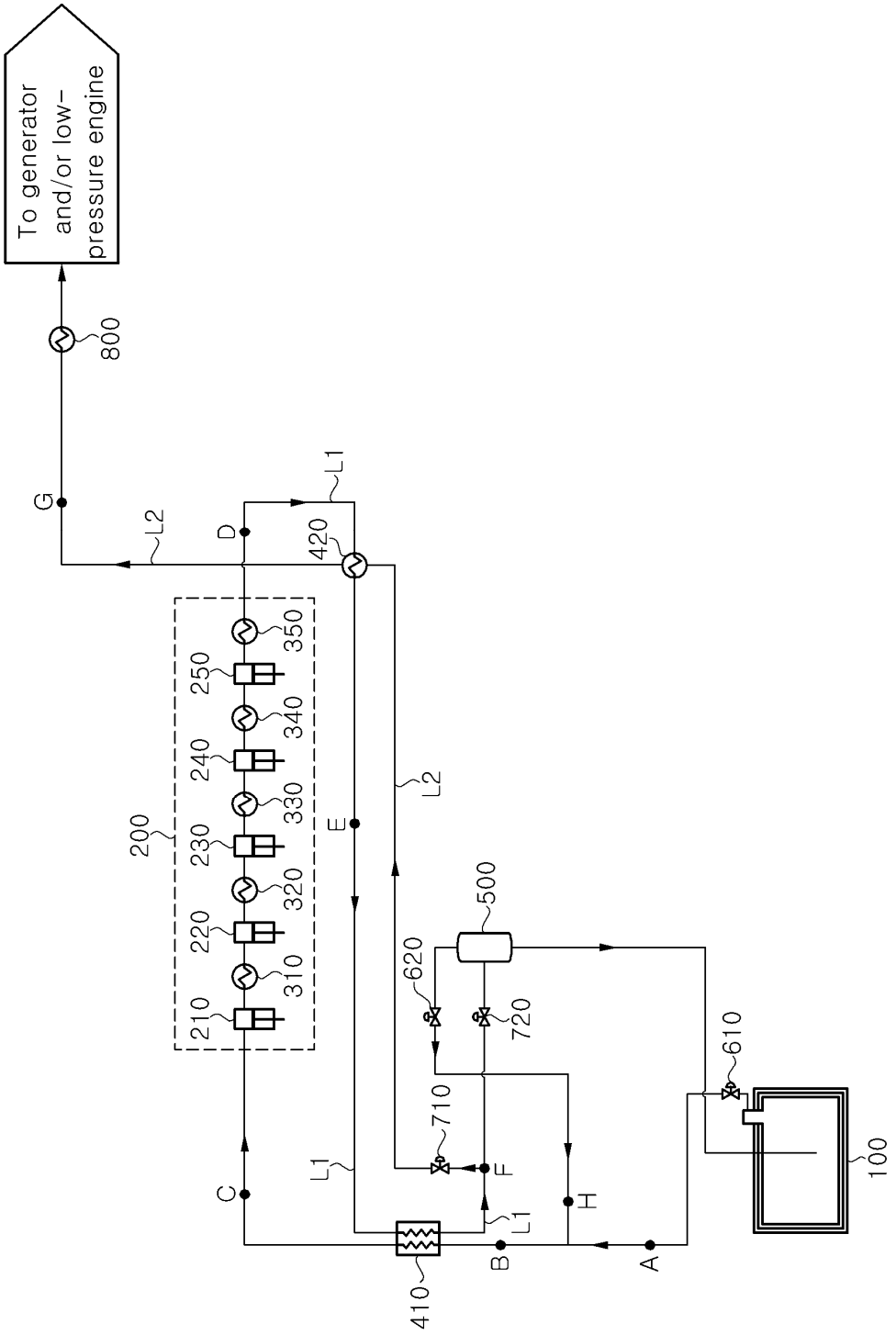
To generator and/or low-pressure engine
800
G
L2
D
L1
420
350
250
340
240
330
230
320
220
310
210
200
E
L2
500
620
720
610
710
C
L1
F
H
L1
100
B
A
410

【FIG. 5】

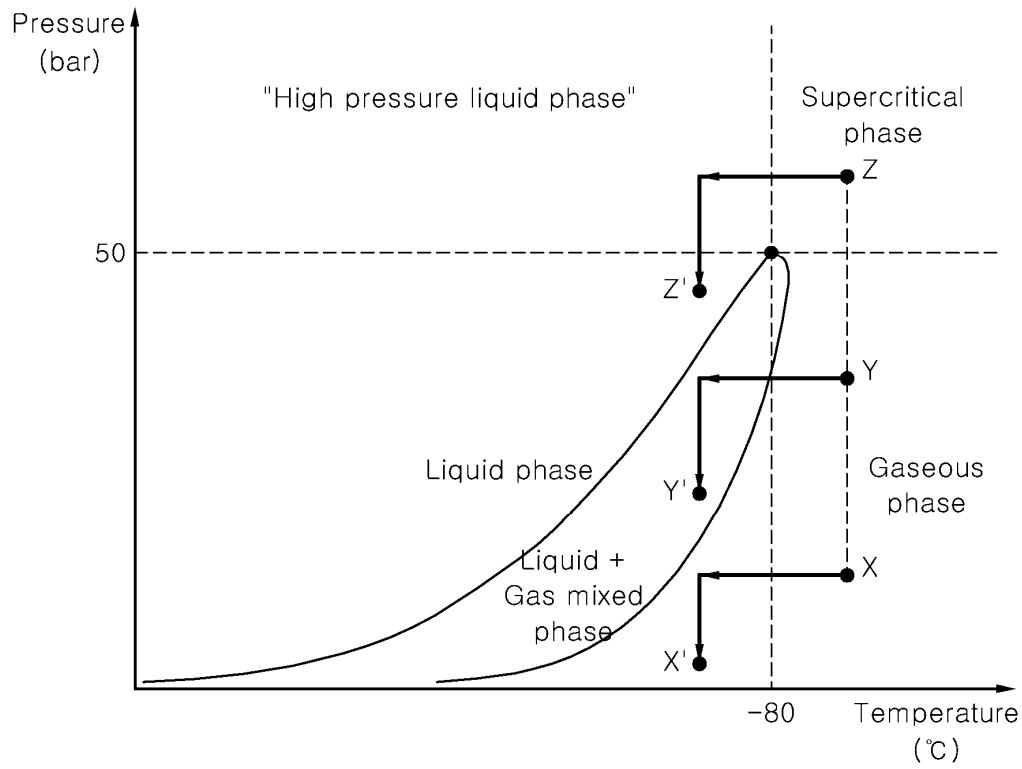
Pressure
(bar)
"High pressure liquid phase"
Supercritical
phase
Z
50
Z'
Y
Liquid phase
Y'
Gaseous
phase
Liquid +
Gas mixed
phase
X
X'
-80
Temperature
(℃)