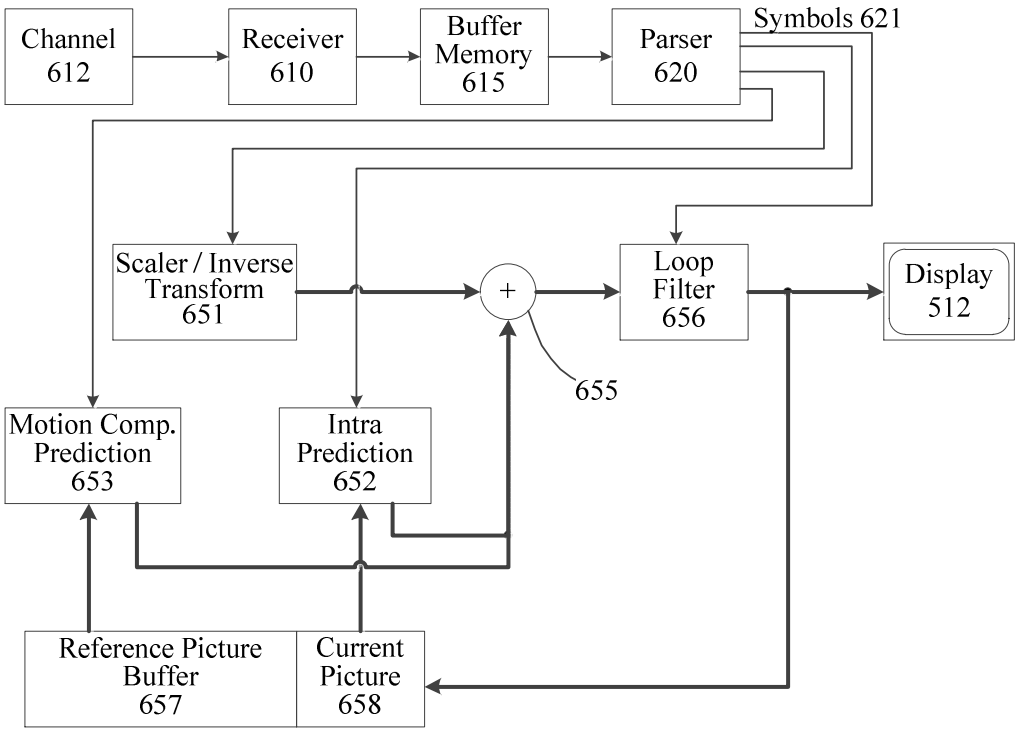
Channel
612
Receiver
610
Buffer
Memory
615
Parser
620
Symbols 621
Scaler / Inverse
Transform
651
+
Loop
Filter
656
Display
512
655
Motion Comp.
Prediction
653
Intra
Prediction
652
Reference Picture
Buffer
657
Current
Picture
658

FIG. 17