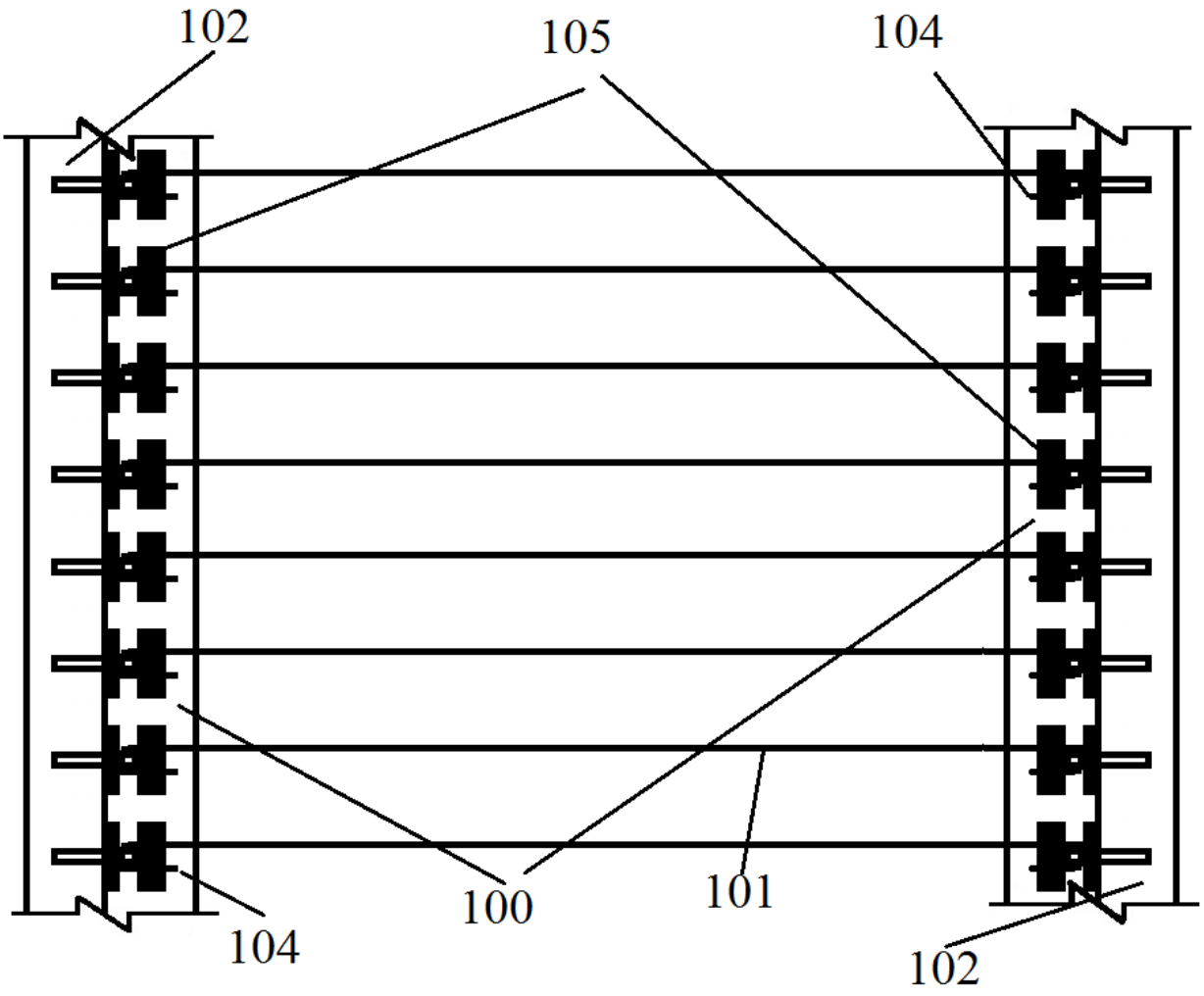

Figure 1
(Drawing is not to scale)

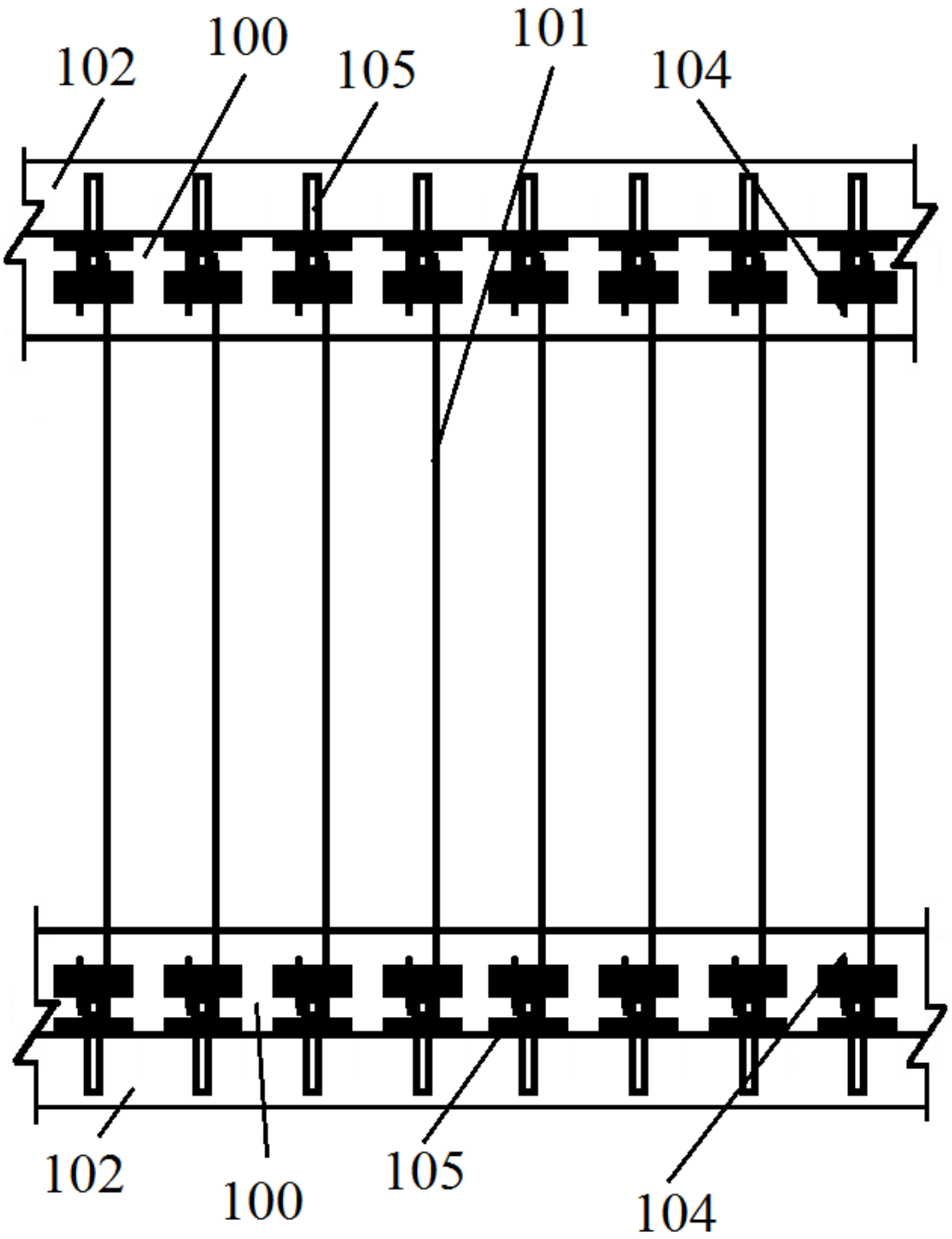

Figure 2
(Drawing is not to scale)

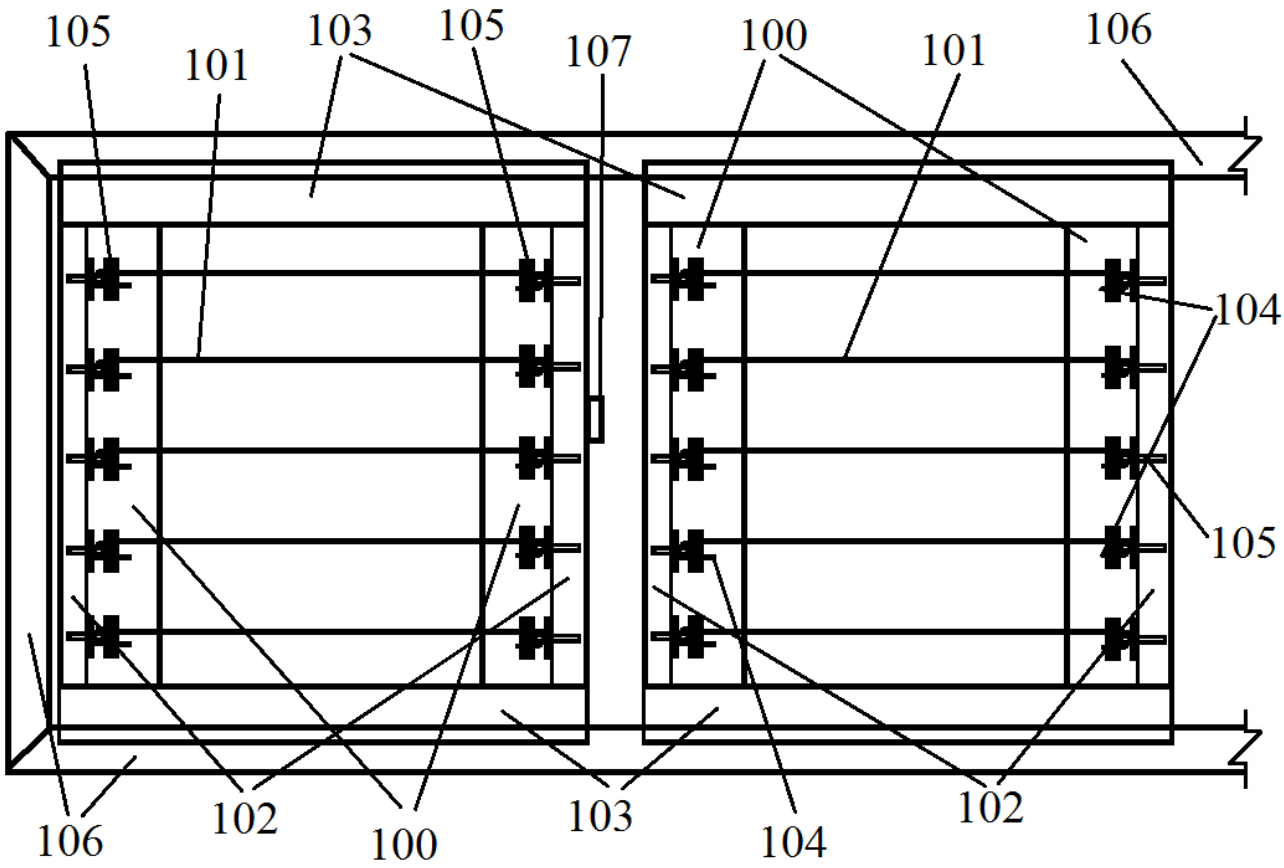

Figure 3
(Drawing is not to scale)

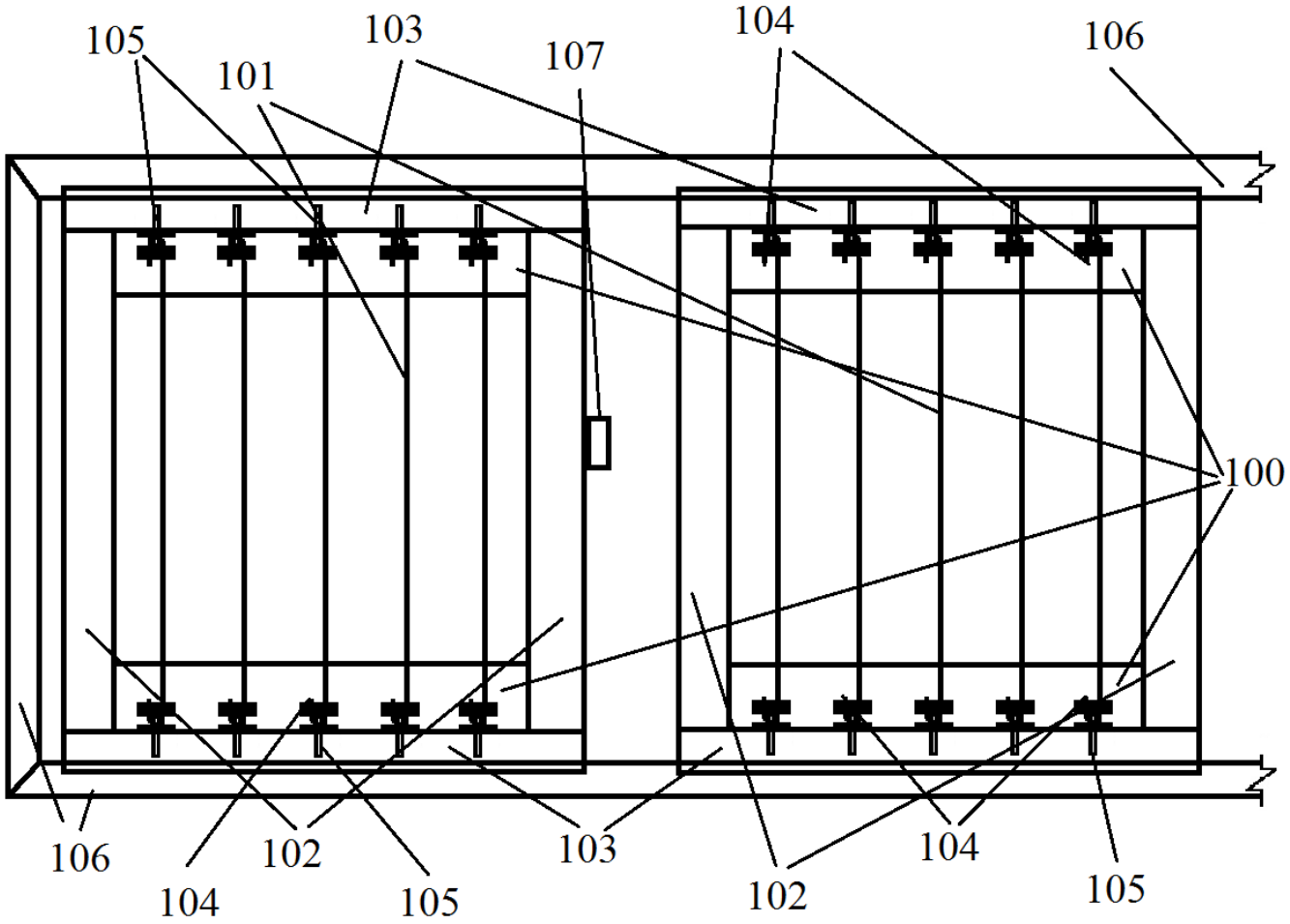

Figure 4
(Drawing is not to scale)

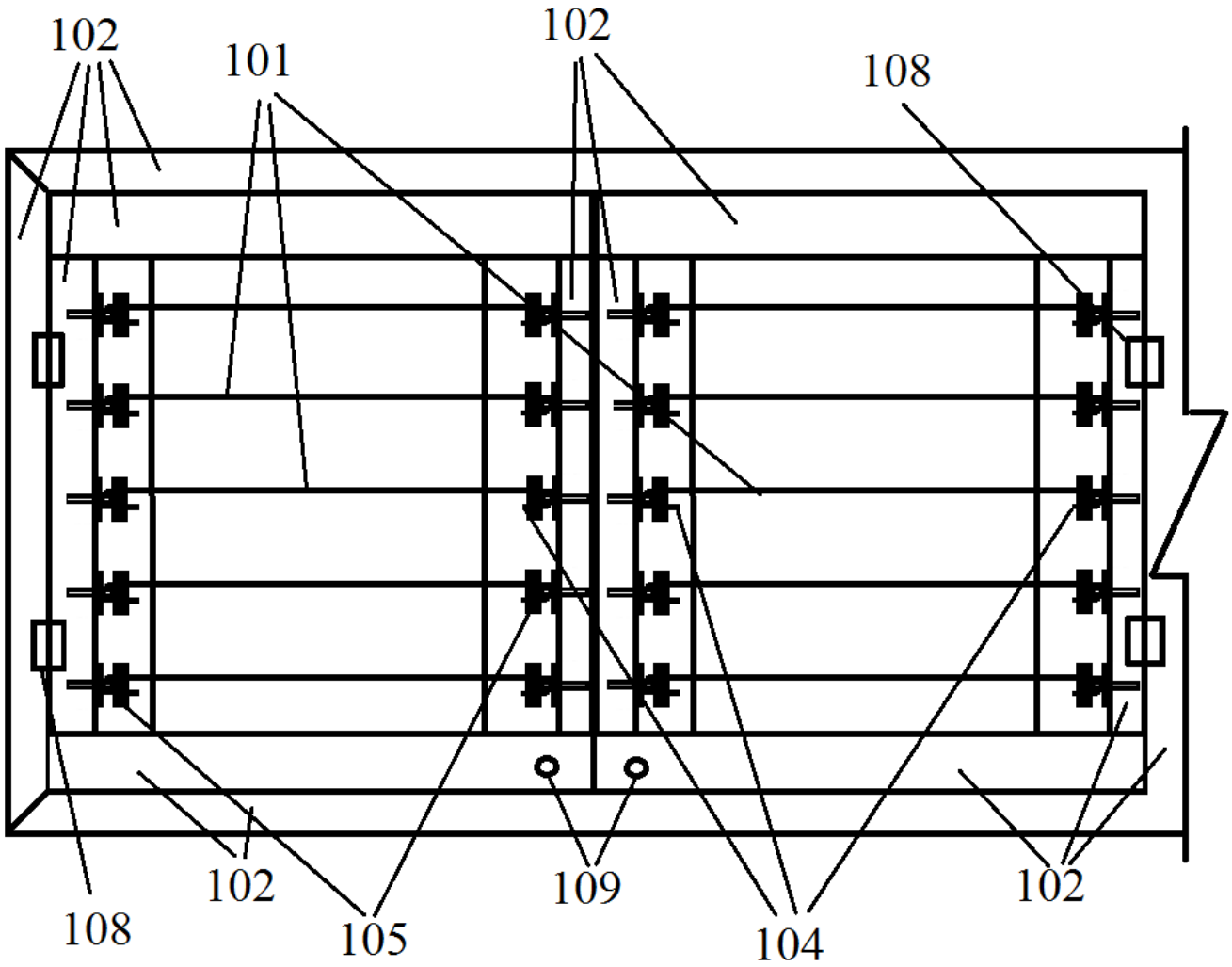

Figure 5
(Drawing is not to scale)

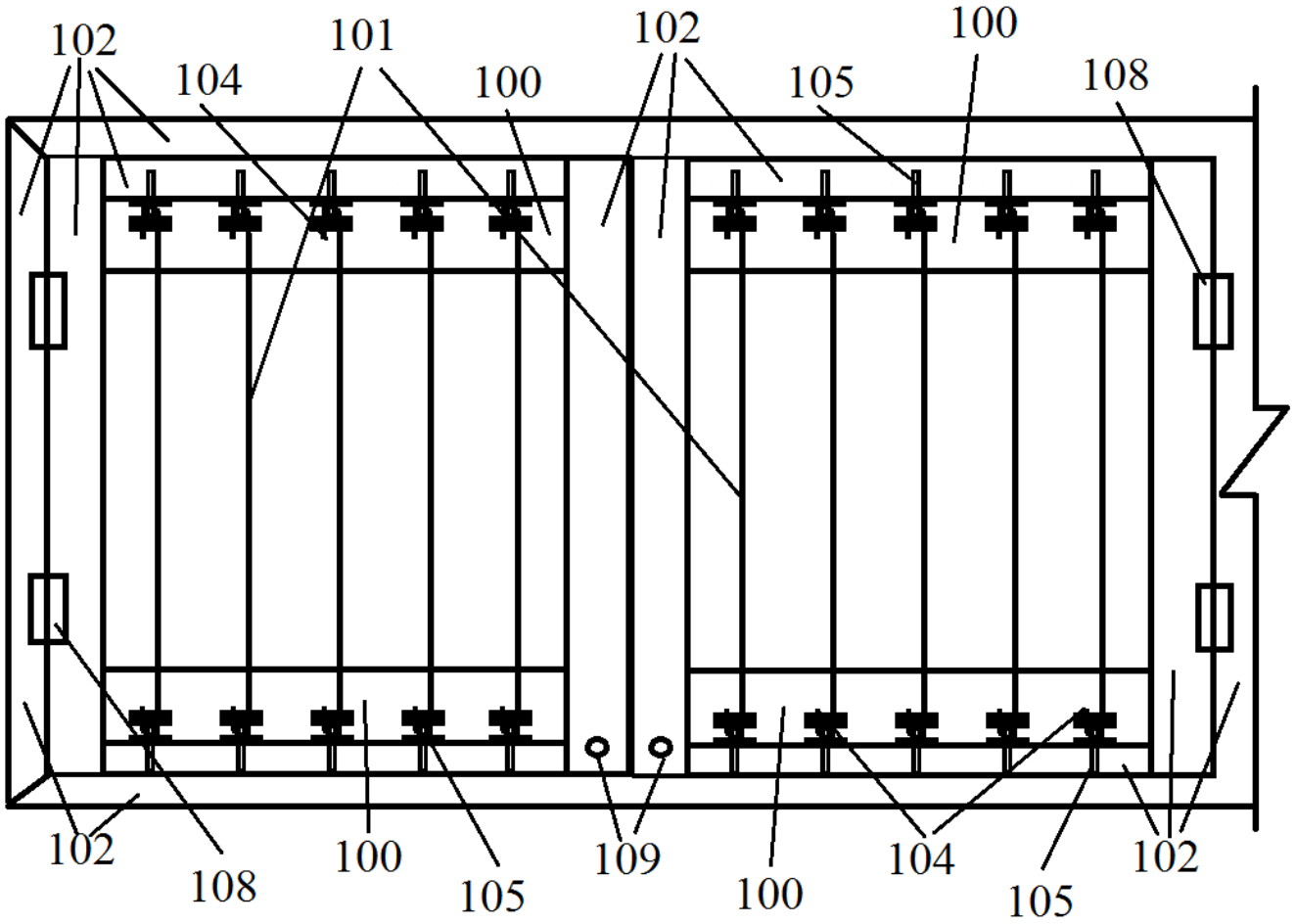

Figure 6
(Drawing is not to scale)

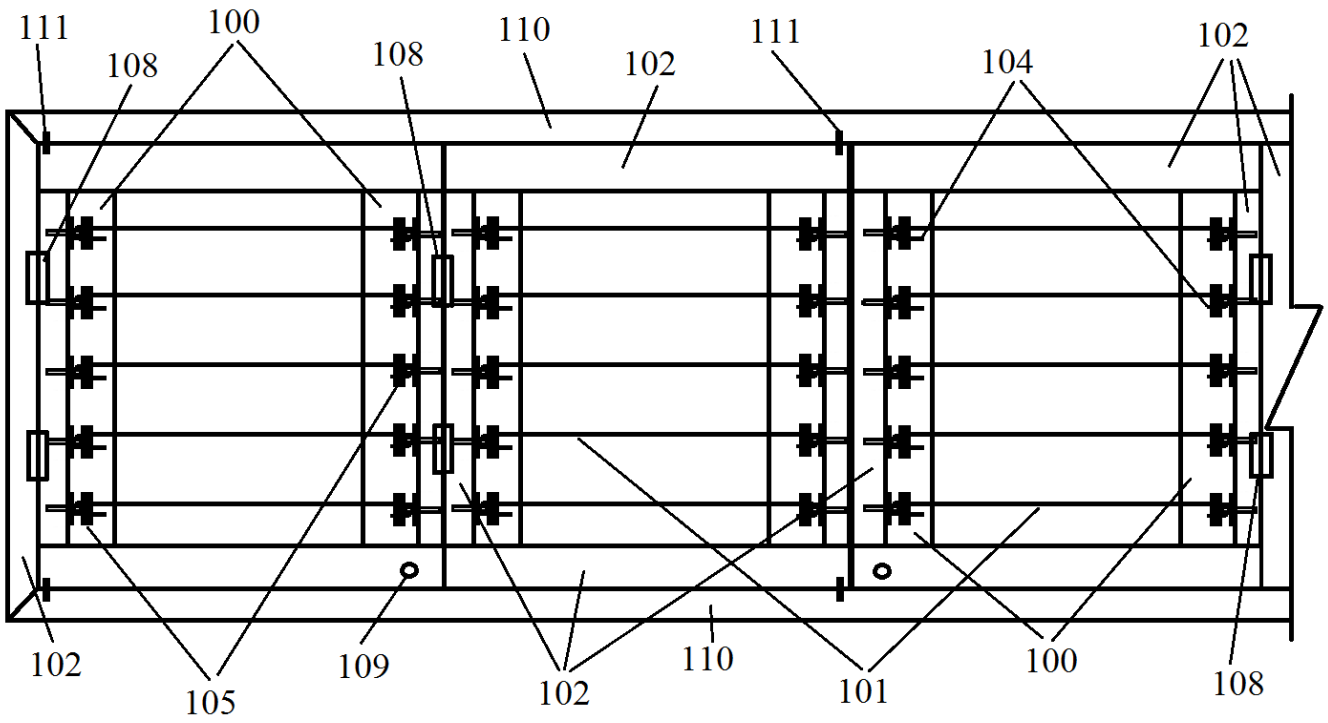

Figure 7
(Drawing is not to scale)

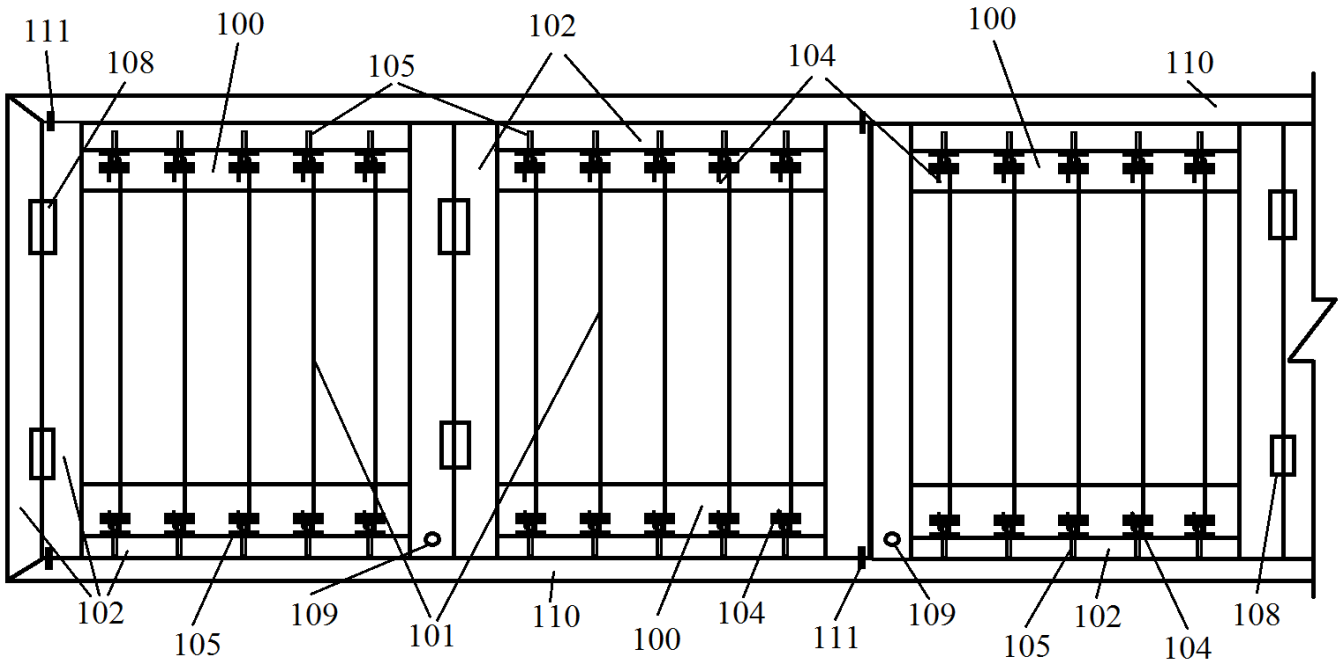

Figure 8
(Drawing is not to scale)

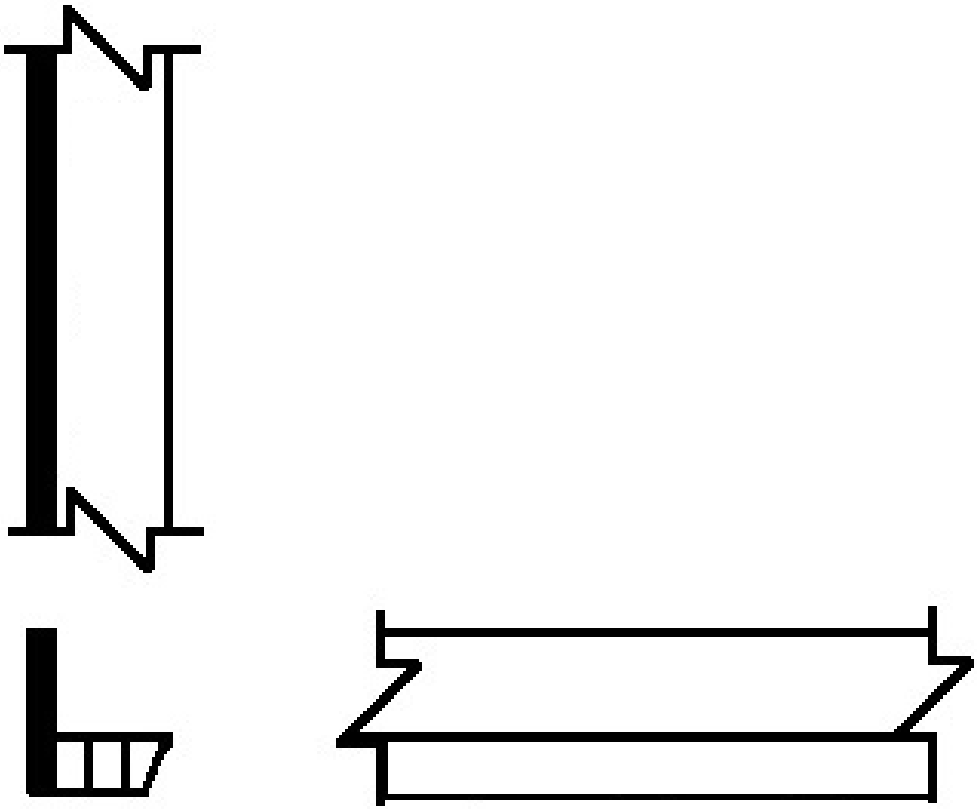

Figure 9
(Drawing is not to scale)

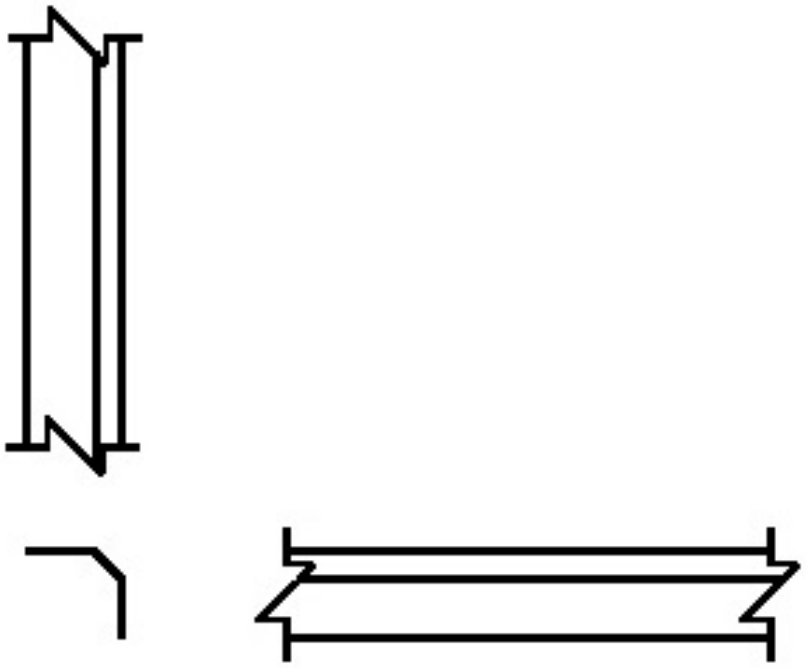

Figure 10
(Drawing is not to scale)

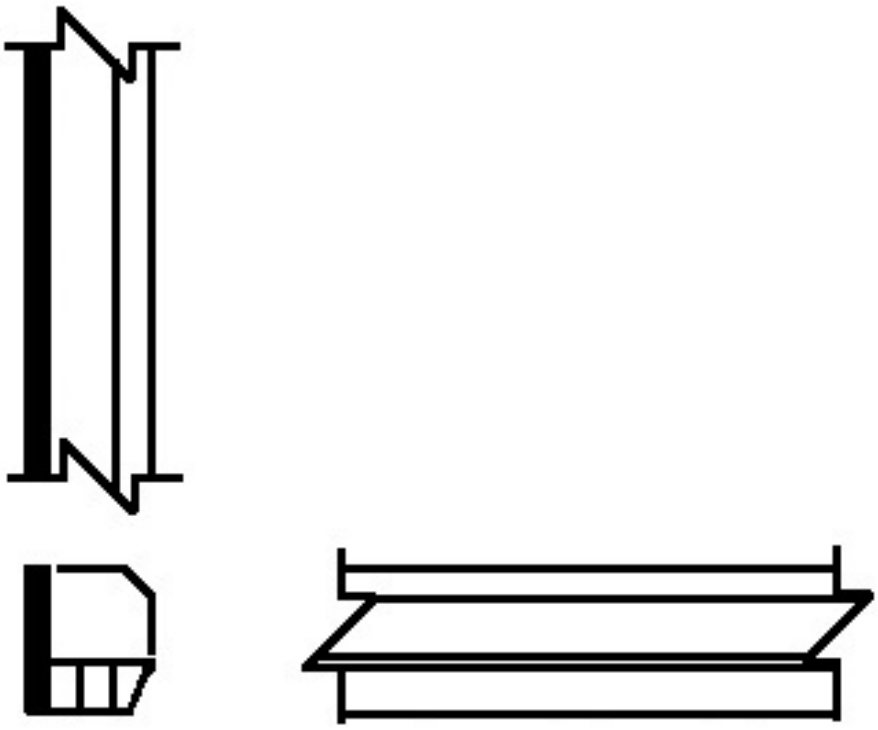

Figure 11
(Drawing is not to scale)

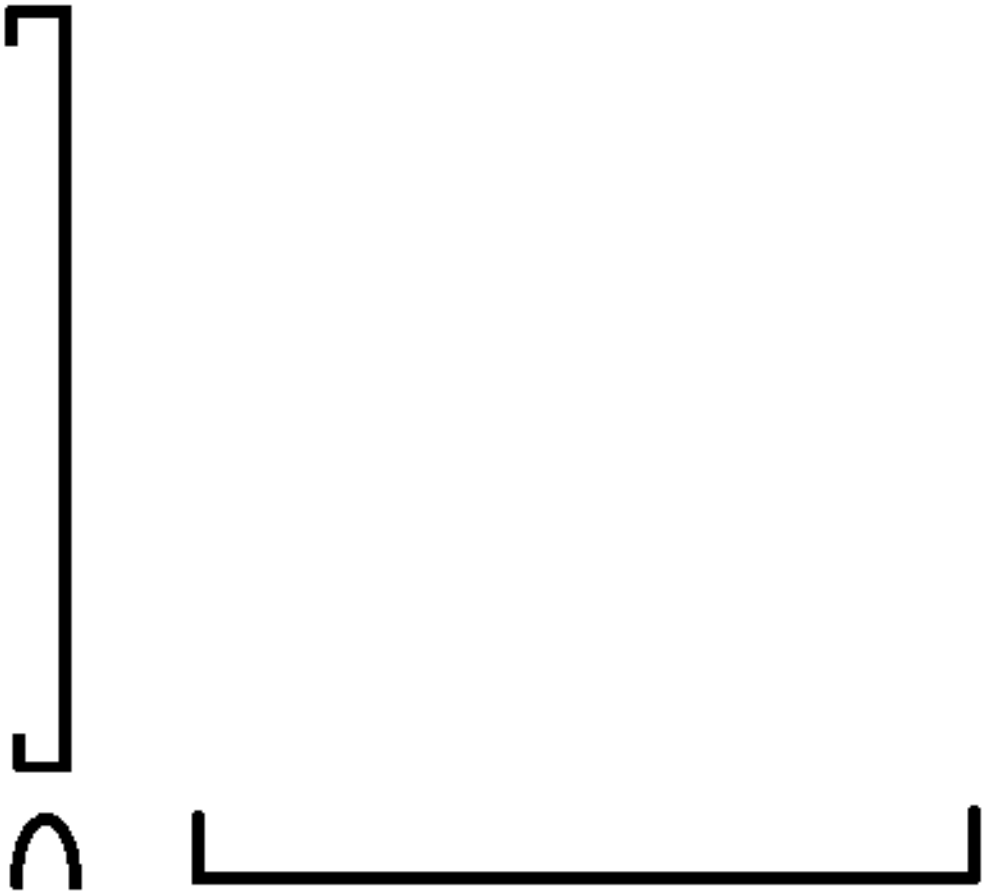

Figure 12
(Drawing is not to scale)

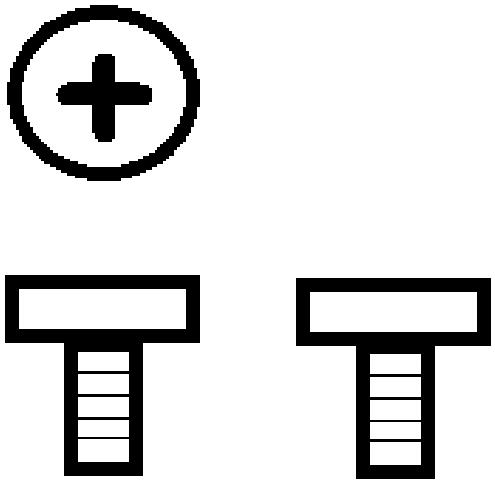

Figure 13
(Drawing is not to scale)

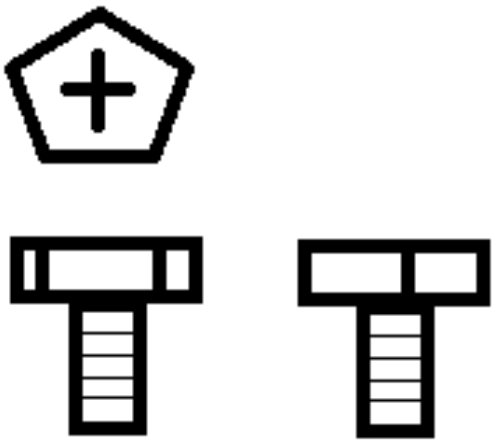

Figure 14
(Drawing is not to scale)

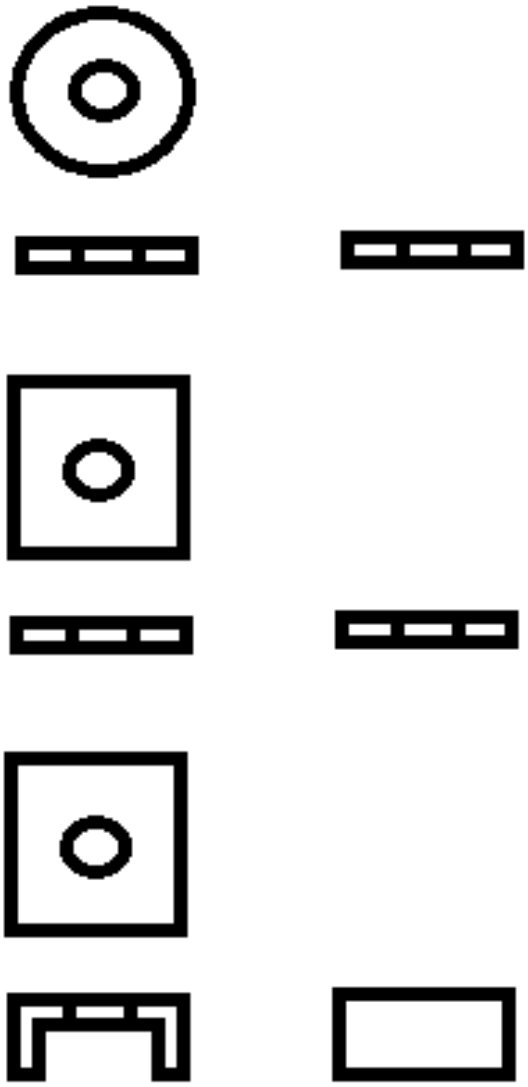

Figure 15
(Drawing is not to scale)