WO 2025/236769 PCT/CN2025/076270

[图1]

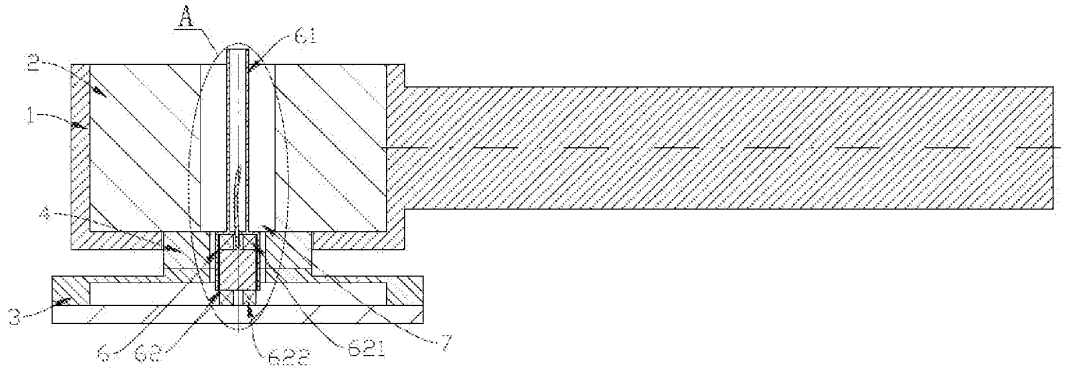

[图2]

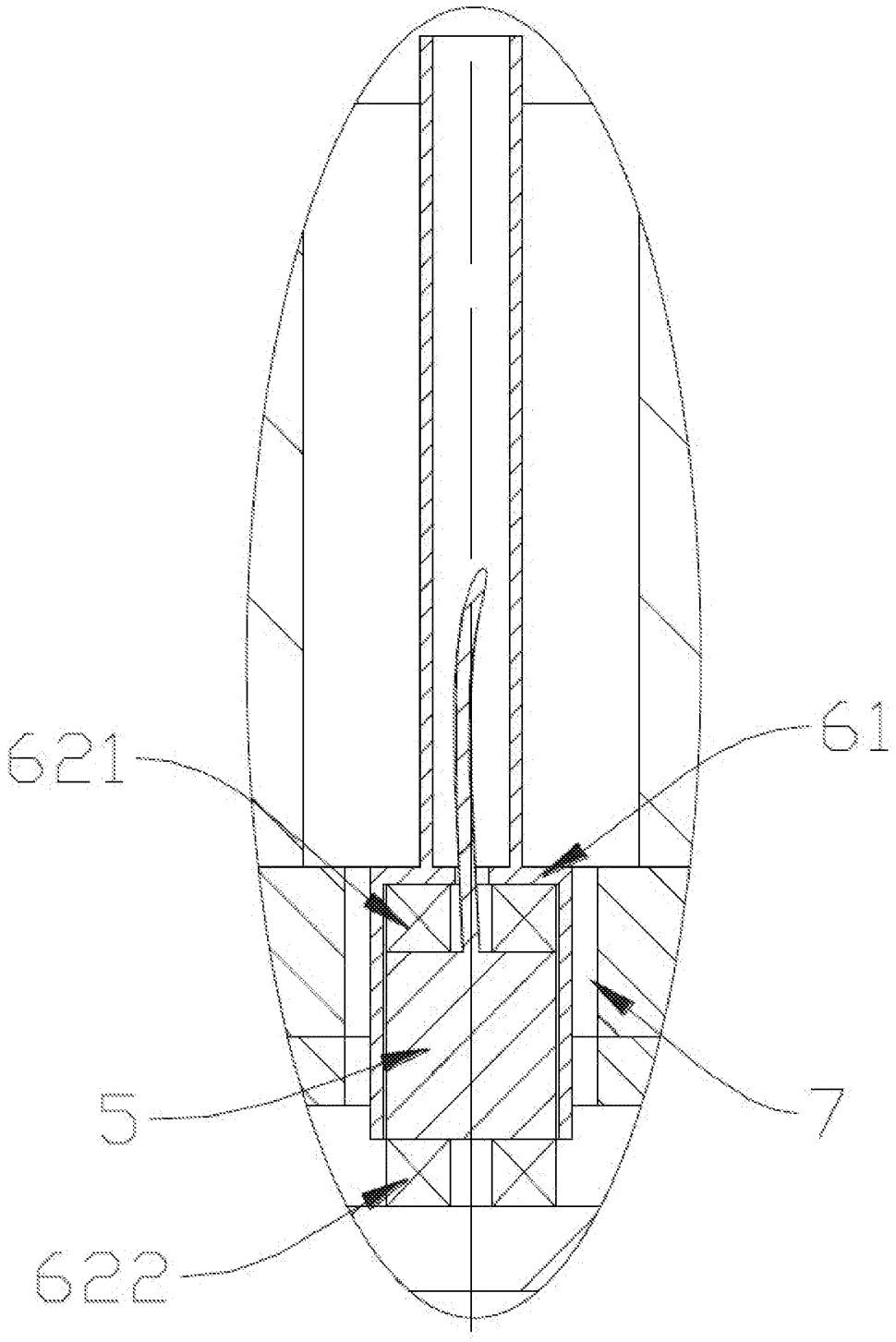

[图3]

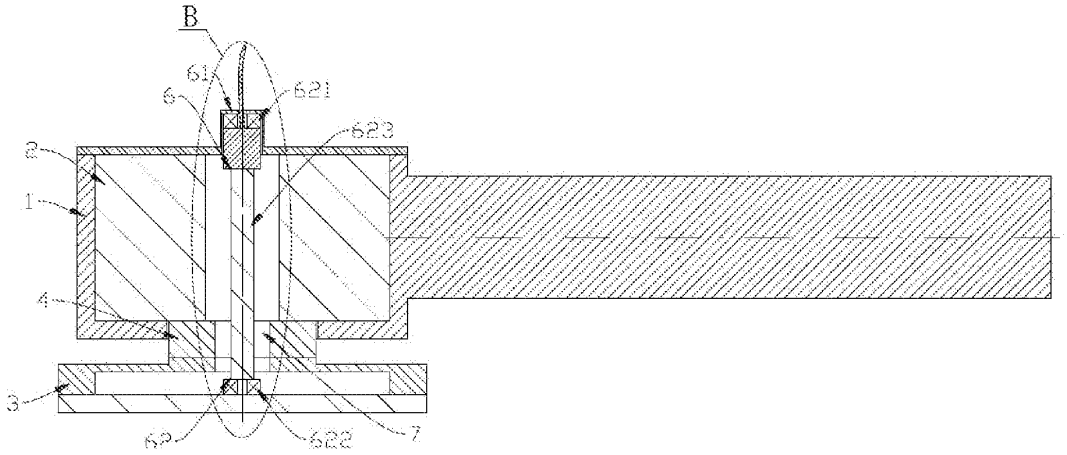

[图4]

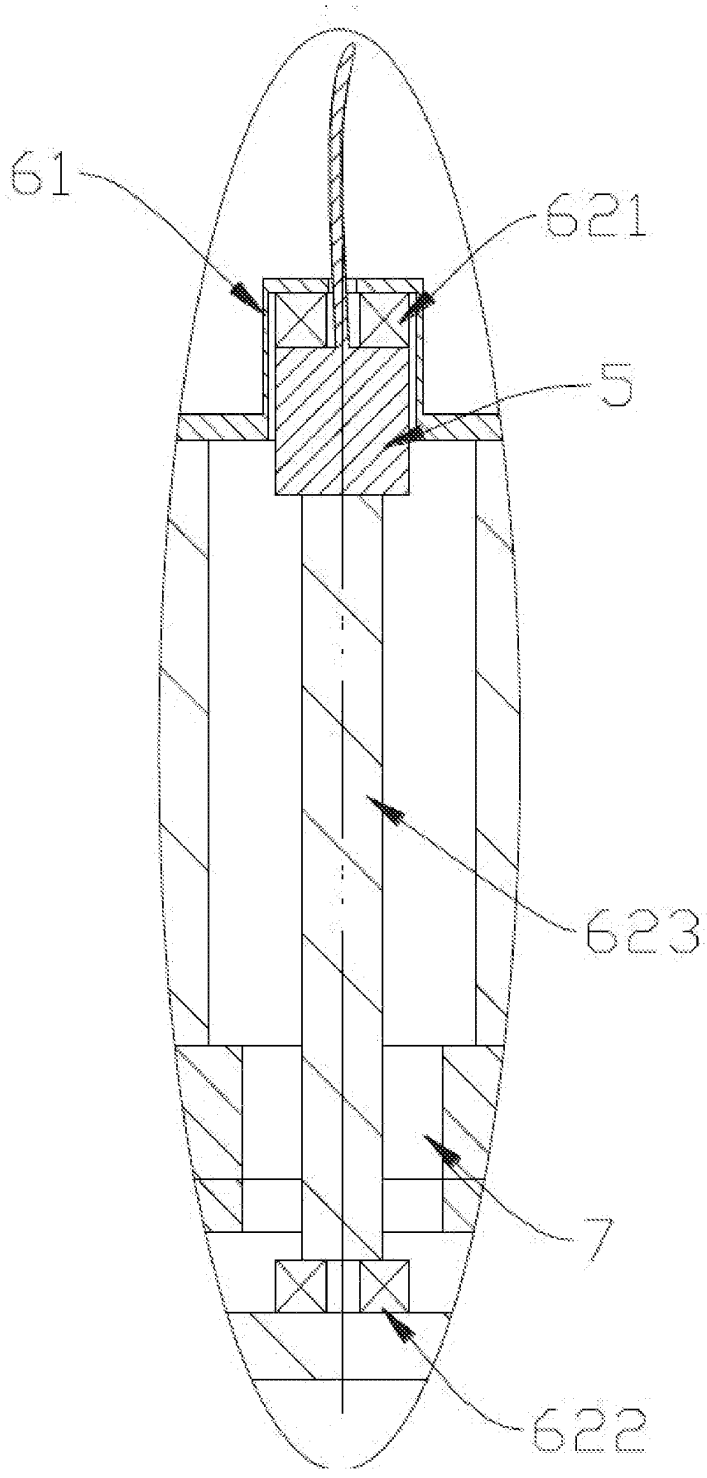

[图5]

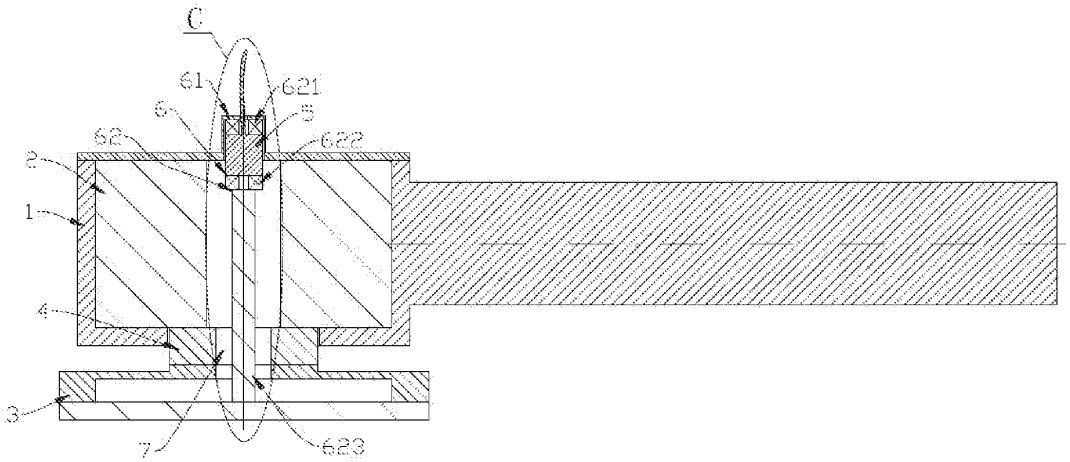

[图6]

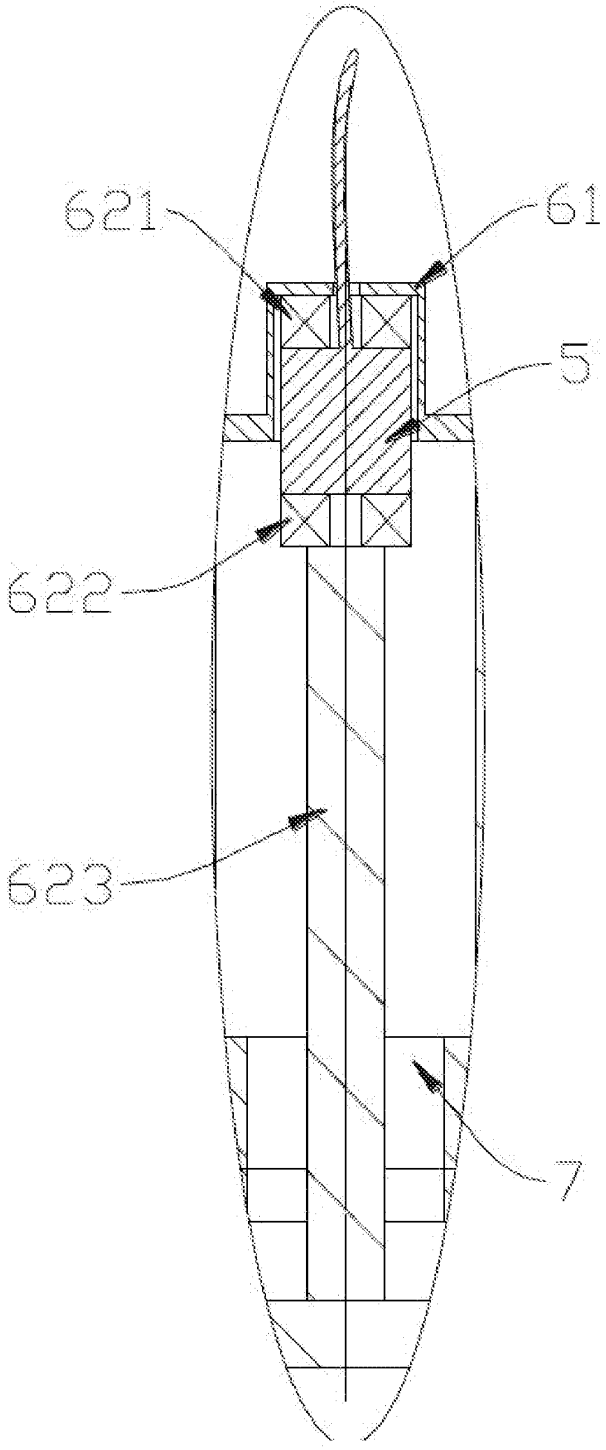

[图7]

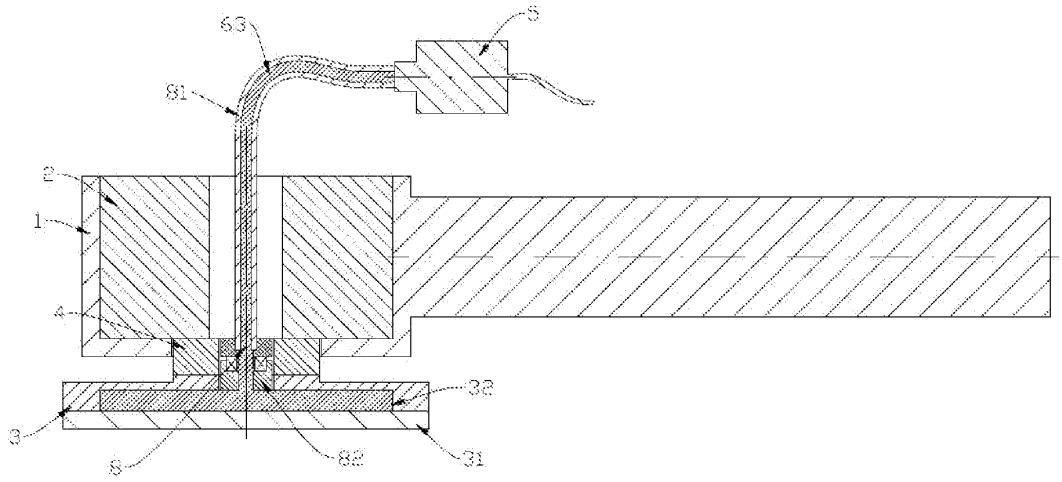

[图8]

