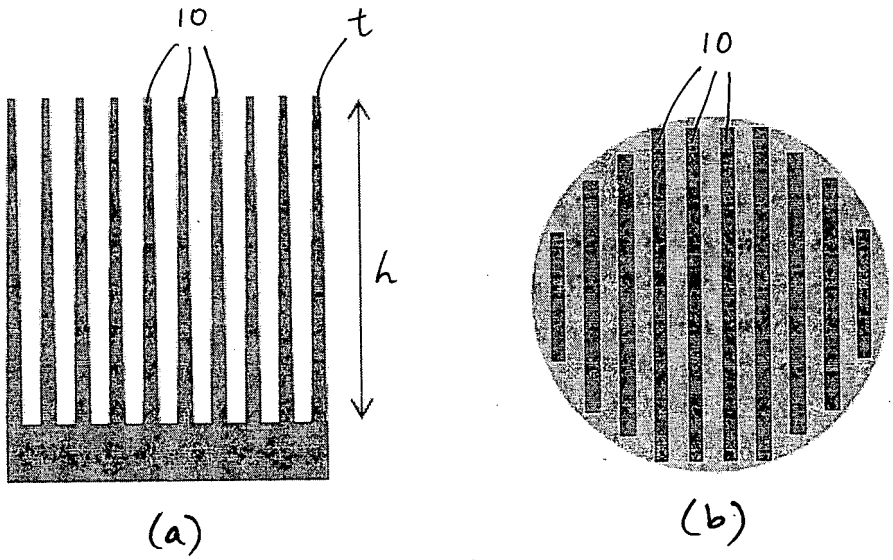

FIG. 1

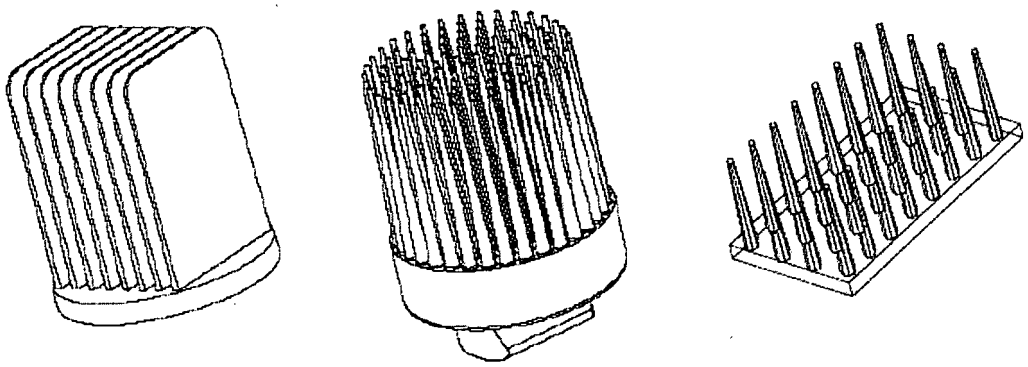

FIG. 2

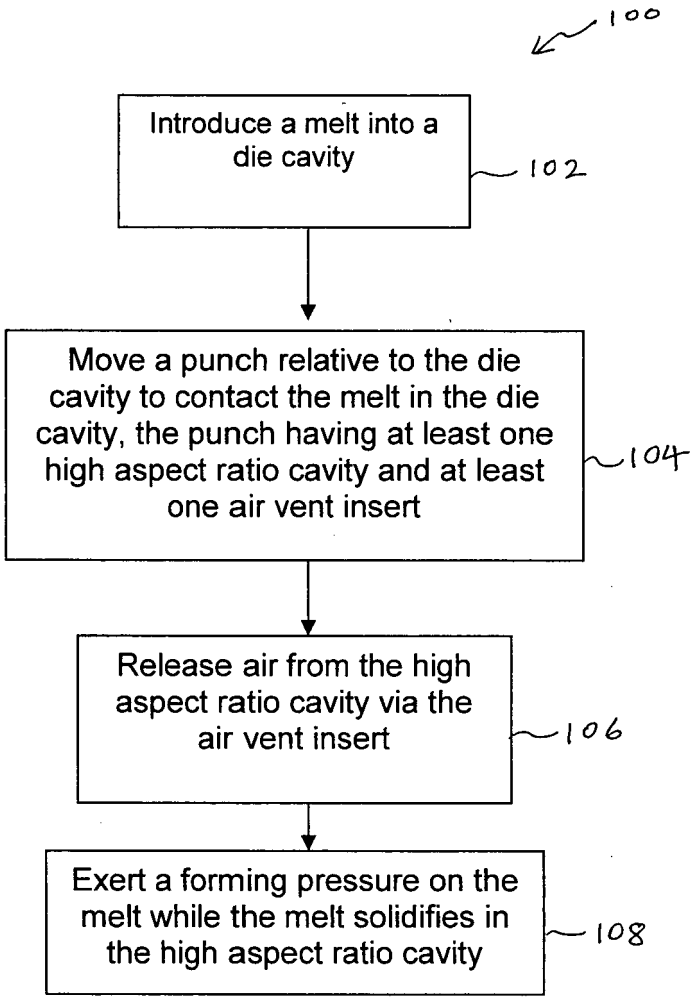
100
Introduce a melt into a die cavity
102
Move a punch relative to the die cavity to contact the melt in the die cavity, the punch having at least one high aspect ratio cavity and at least one air vent insert
104
Release air from the high aspect ratio cavity via the air vent insert
106
Exert a forming pressure on the melt while the melt solidifies in the high aspect ratio cavity
108

Fig. 3

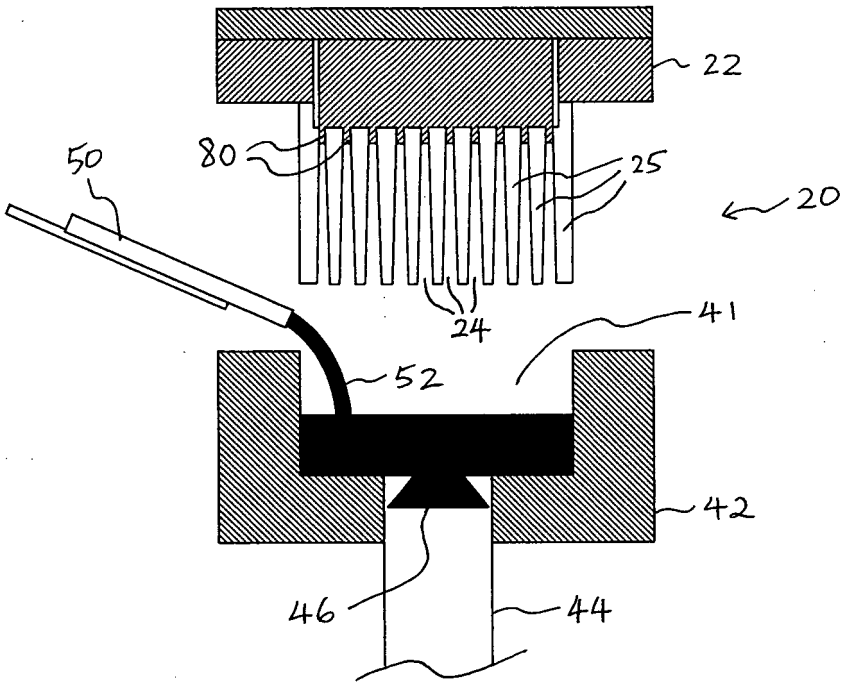

FIG. 4

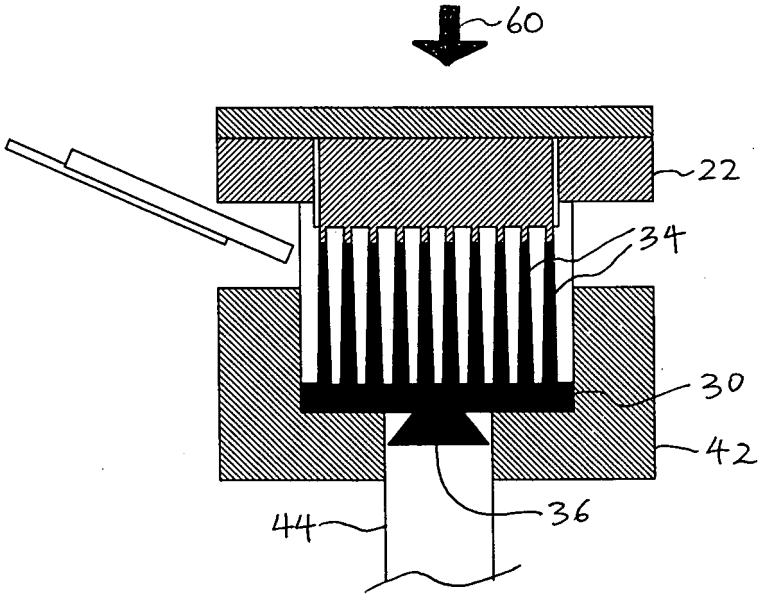

FIG. 5

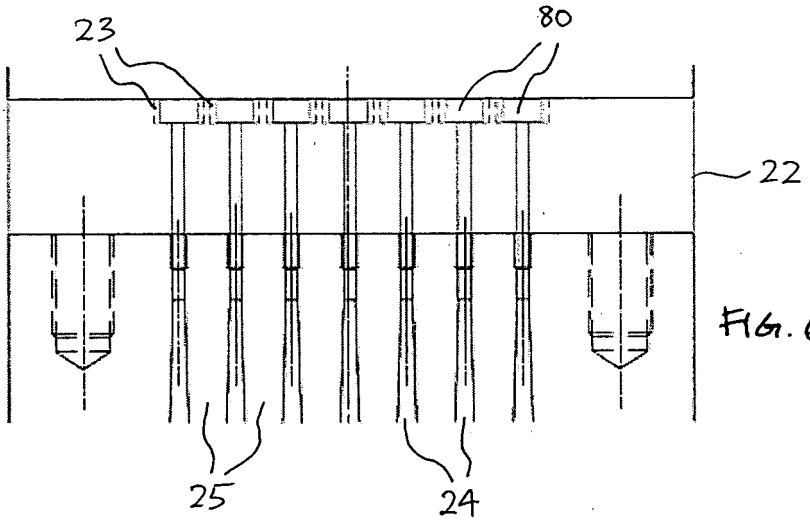

FIG. 6

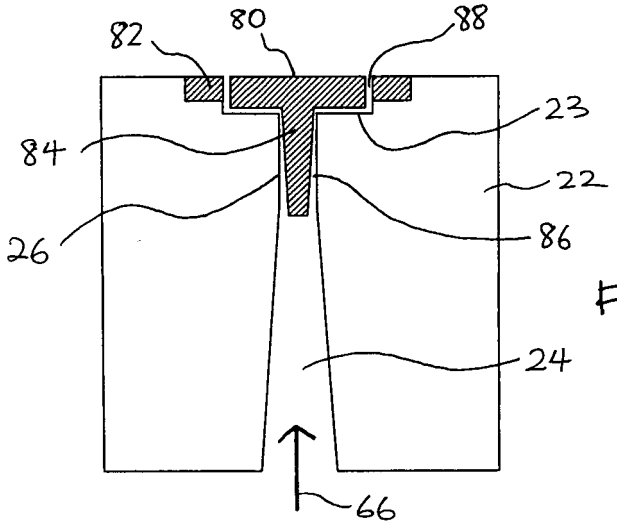

FIG. 7

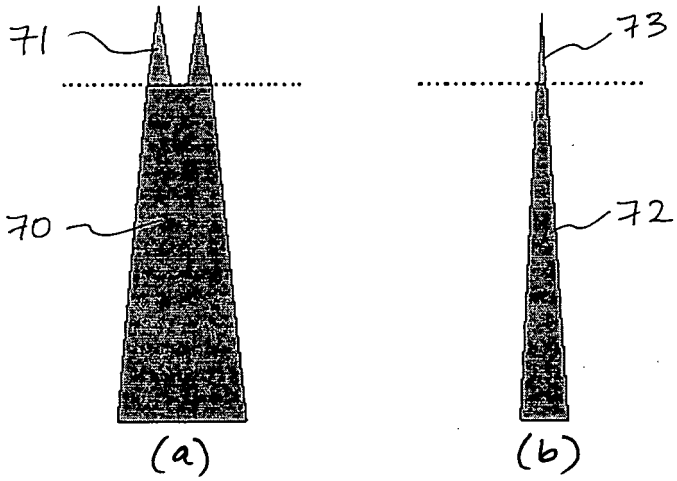

FIG. 11

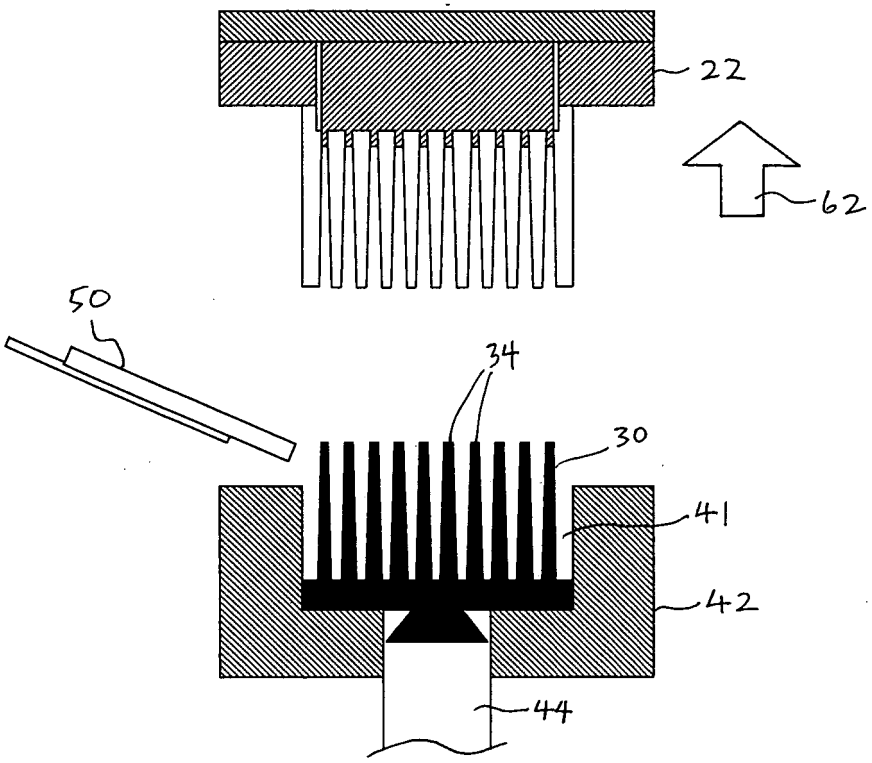

Fig. 8

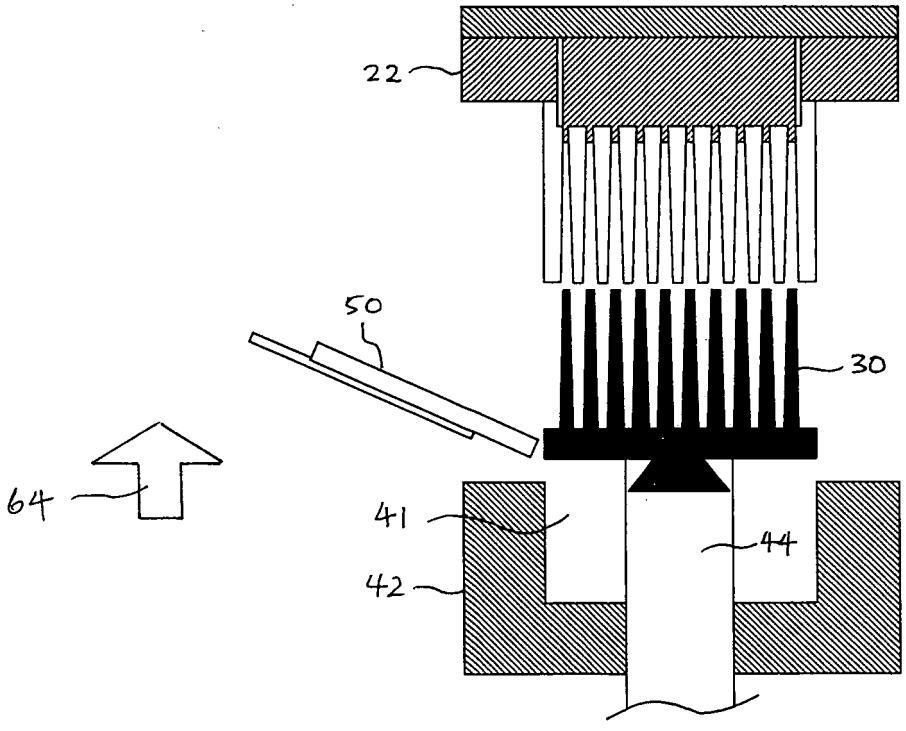

Fig. 9

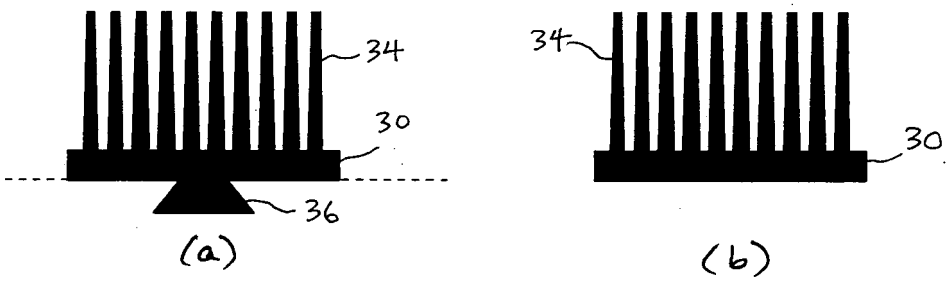

FIG. 10

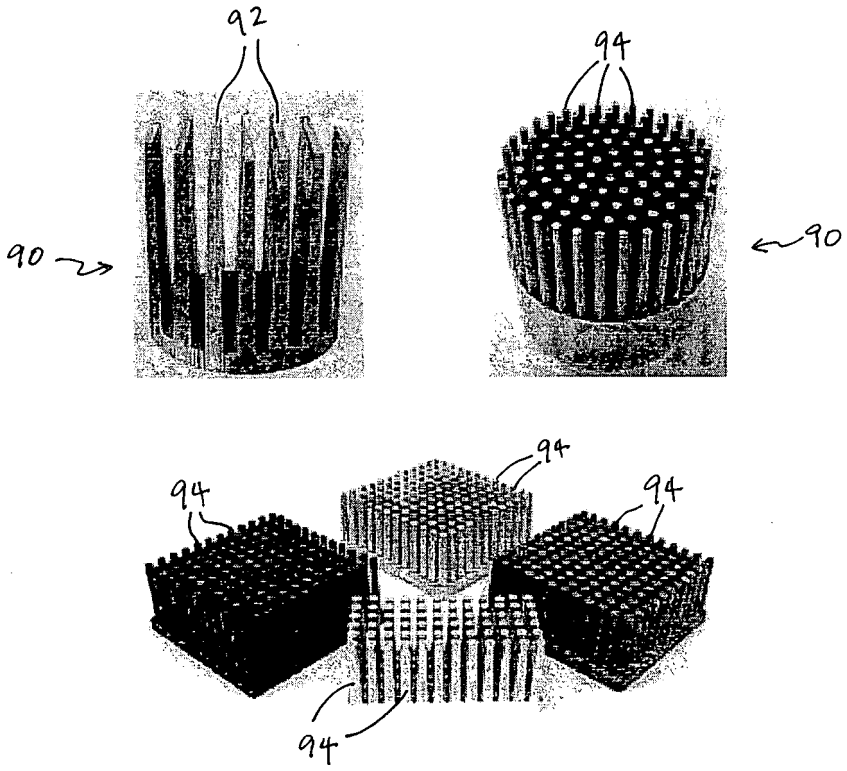

FIG. 12

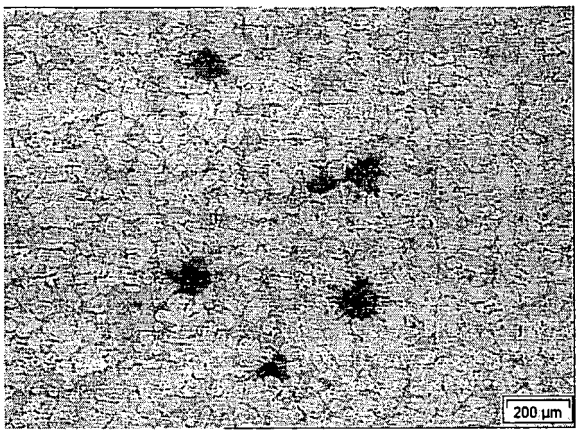

(a)

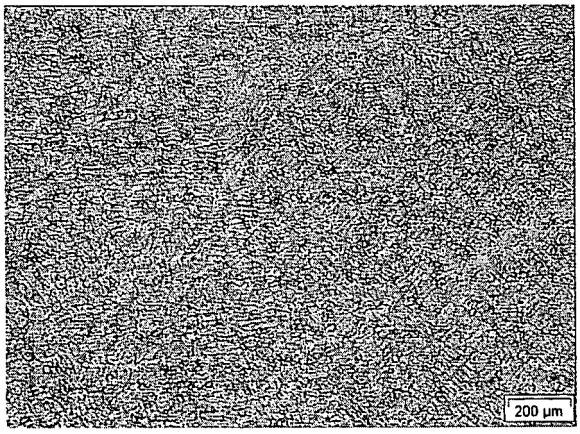

(b)

Fig. 13