(12) INTERNATIONAL APPLICATION PUBLISHED UNDER THE PATENT COOPERATION TREATY (PCT)

(19) World Intellectual Property Organization
International Bureau

(43) International Publication Date
20 December 2001 (20.12.2001)

PCT

(10) International Publication Number
WO 01/96080 A3

(51) International Patent Classification[7]: B29C 31/04, 31/06, 47/10, 45/18

(21) International Application Number: PCT/US01/19068

(22) International Filing Date: 14 June 2001 (14.06.2001)

(25) Filing Language: English

(26) Publication Language: English

(30) Priority Data:
09/594,378 15 June 2000 (15.06.2000) US

(71) Applicant: POLYONE CORPORATION [US/US]; 2900 Shawnee Industrial Way, Suwanee, GA 30174-2878 (US).

(72) Inventor: MARTELLI, Daniel, M.; 418 McKinley Avenue, Bridgeport, CT 06604 (US).

(74) Agents: SCANLON, Stephen, D. et al.; Jones, Day, Reavis & Pogue, North Point, 901 Lakeside Avenue, Cleveland, OH 44114 (US).

(81) Designated States *(national)*: CA, CN, JP, MX, SG, TR.

(84) Designated States *(regional)*: European patent (AT, BE, CH, CY, DE, DK, ES, FI, FR, GB, GR, IE, IT, LU, MC, NL, PT, SE, TR).

Published:
— *with international search report*

(88) Date of publication of the international search report:
28 March 2002

For two-letter codes and other abbreviations, refer to the "Guidance Notes on Codes and Abbreviations" appearing at the beginning of each regular issue of the PCT Gazette.

(54) Title: COLORANT FEEDER APPARATUS FOR POLYMER PROCESSING MACHINE

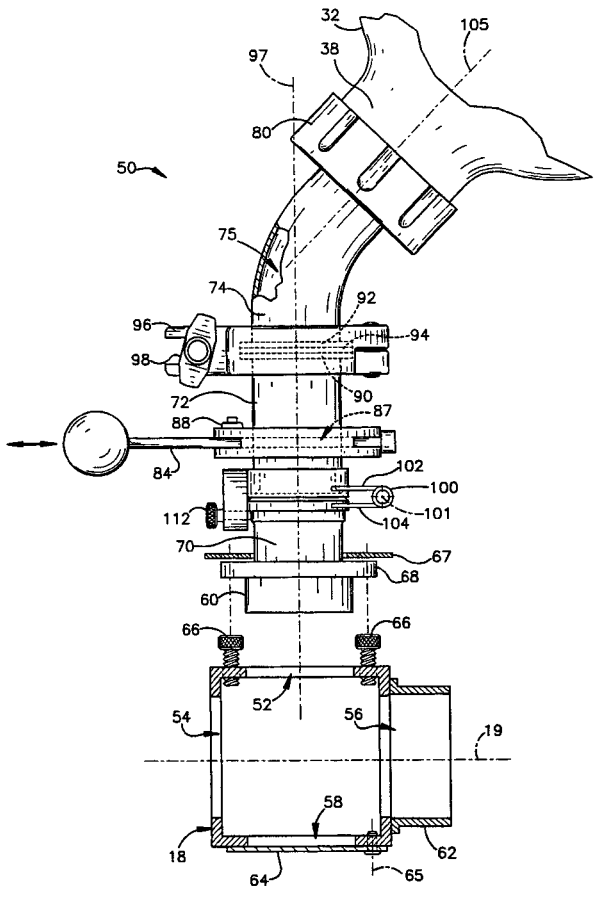

(57) Abstract: A coupling apparatus (50) couples a container of colorant (32) to a feeder structure (18) for a polymer processing machine. The coupling apparatus (50) includes a tubular structure (70, 72, 74) with an outlet portion (70) that the feeder structure (18), and an inlet portion (80) that receives and supports the container (32) above the outlet portion. The inlet portion (70, 74) has an upright position in which it supports the container (32) in an overturned position from which the colorant can flow out of the container under the force of gravity. A joint (100), which is preferably a hinge, supports the inlet portion (72, 74) for movement to an overturned position. The inlet portion can then receive the container in (32) an upright position from which the colorant will not spill from the container. Preferably, a releaseable locking device (112) interacts with the joint (100) to retain the inlet portion (72, 74) of the tubular structure releaseably in its upright position. Moreover, the inlet portion (72, 74) of the tubular structure is preferably moveable relative to the output portion (70) rotationally about a vertical axis when the inlet portion (72, 74) is in its upright position. This enables the container (32) to swivel to a convenient position about the vertical axis. A clamp retains the container releaseably in a selected position about the vertical axis by blocking such rotational movement of the inlet portion.

WO 01/96080 A3