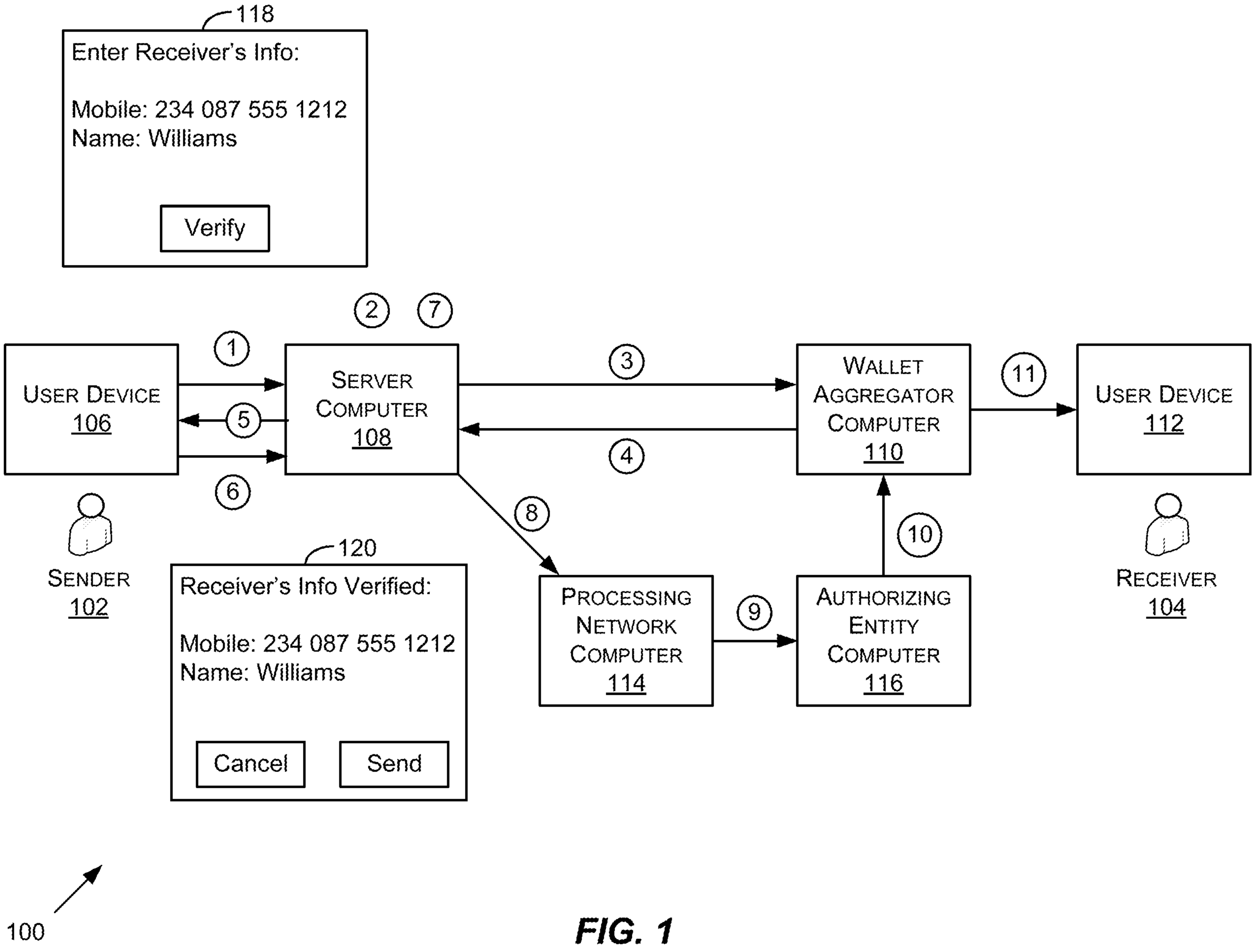
118
Enter Receiver's Info:
Mobile: 234 087 555 1212
Name: Williams
Verify
2
7
1
3
11
User Device
106
Server
Computer
108
Wallet
Aggregator
Computer
110
User Device
112
5
4
6
8
10
120
Receiver's Info Verified:
Mobile: 234 087 555 1212
Name: Williams
Cancel
Send
Processing
Network
Computer
114
9
Authorizing
Entity
Computer
116
Sender
102
Receiver
104
100

FIG. 1

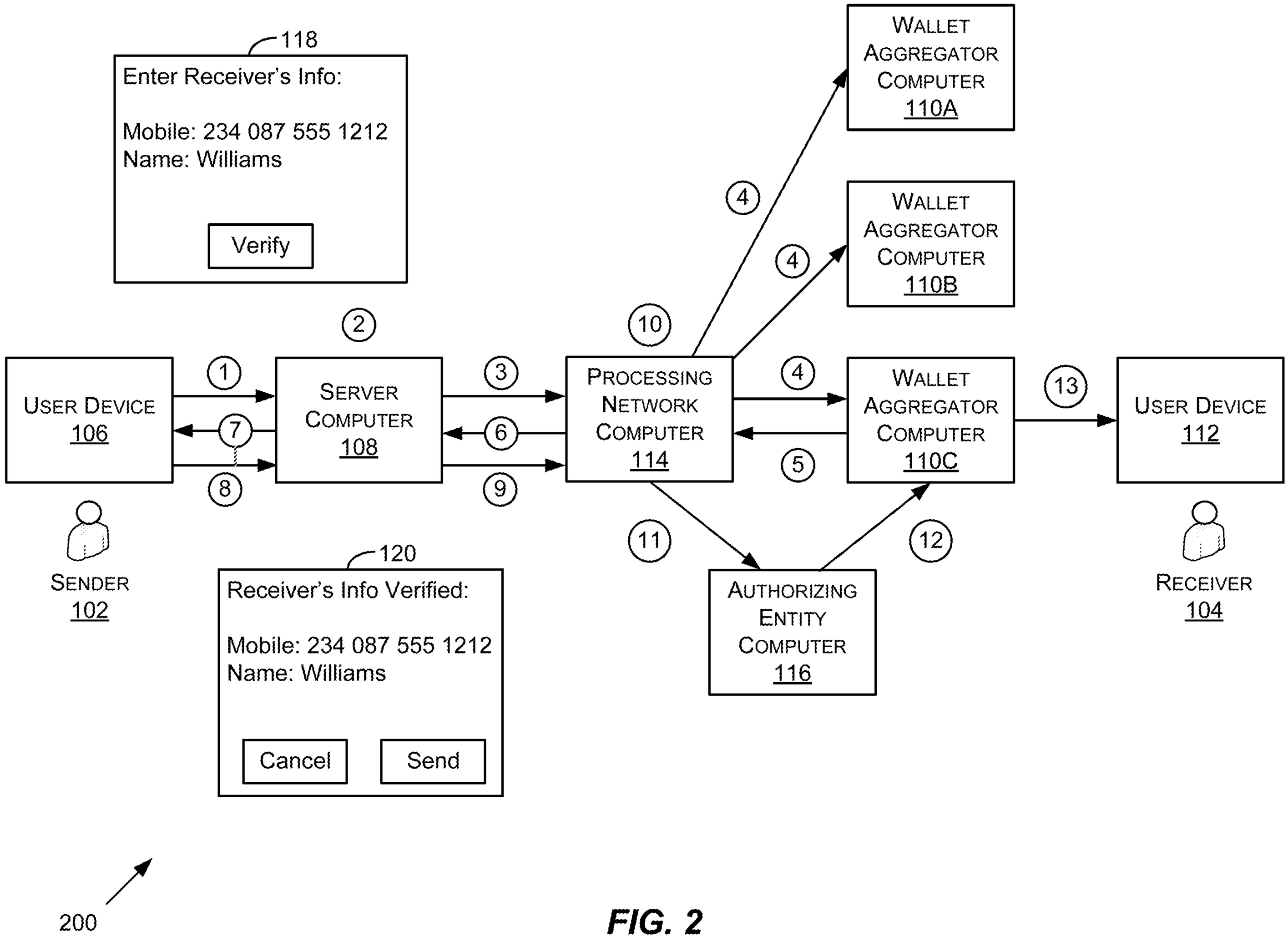
118
Enter Receiver's Info:
Mobile: 234 087 555 1212
Name: Williams
Verify
WALLET AGGREGATOR COMPUTER 110A
WALLET AGGREGATOR COMPUTER 110B
WALLET AGGREGATOR COMPUTER 110C
USER DEVICE 106
SERVER COMPUTER 108
PROCESSING NETWORK COMPUTER 114
USER DEVICE 112
SENDER 102
RECEIVER 104
AUTHORIZING ENTITY COMPUTER 116
120
Receiver's Info Verified:
Mobile: 234 087 555 1212
Name: Williams
Cancel
Send
200

FIG. 2

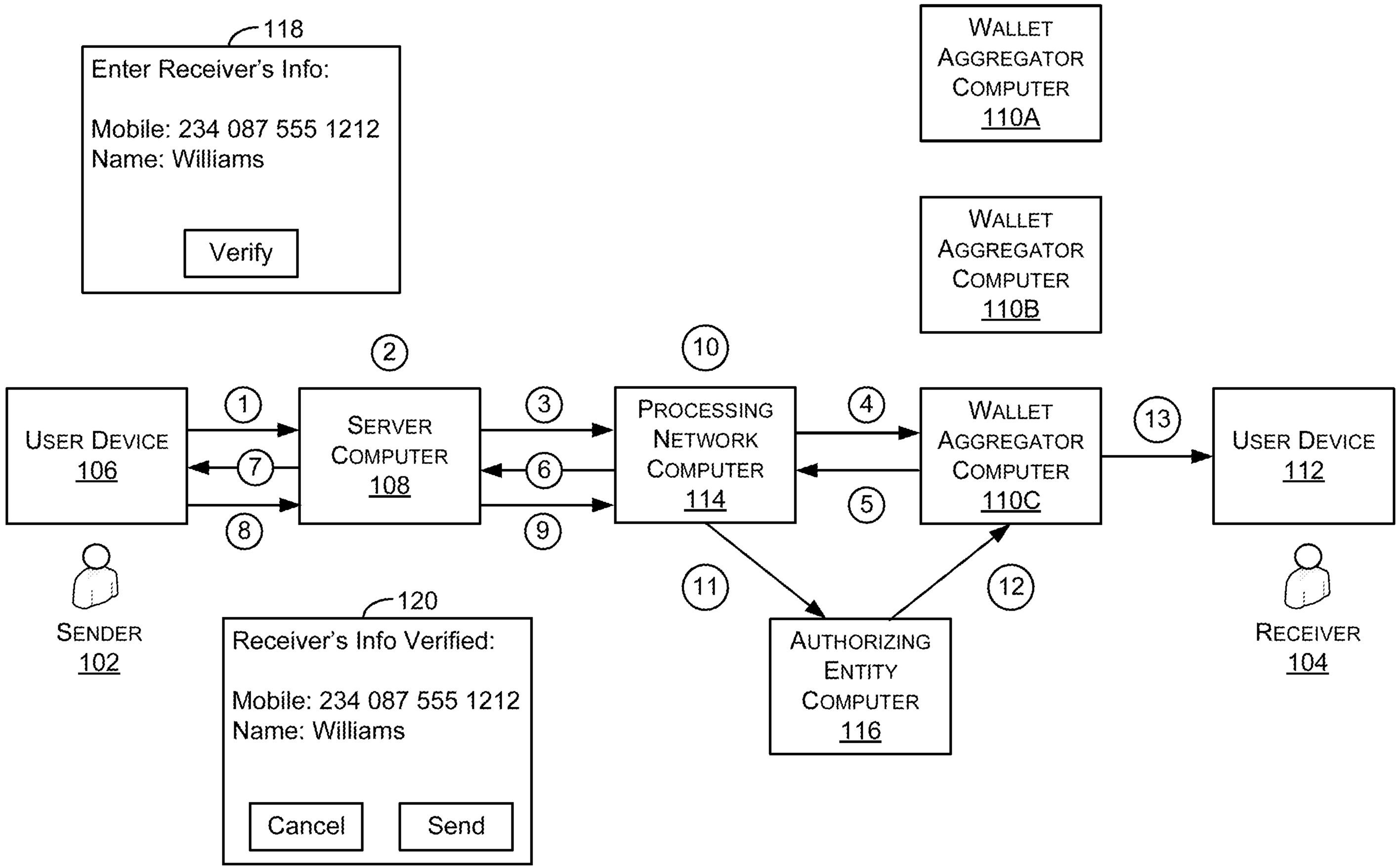
118
Enter Receiver's Info:
Mobile: 234 087 555 1212
Name: Williams
Verify
WALLET AGGREGATOR COMPUTER 110A
WALLET AGGREGATOR COMPUTER 110B
2
10
USER DEVICE 106
1
7
8
SERVER COMPUTER 108
3
6
9
PROCESSING NETWORK COMPUTER 114
4
5
WALLET AGGREGATOR COMPUTER 110C
13
USER DEVICE 112
SENDER 102
120
Receiver's Info Verified:
Mobile: 234 087 555 1212
Name: Williams
Cancel
Send
11
12
AUTHORIZING ENTITY COMPUTER 116
RECEIVER 104
300

FIG. 3

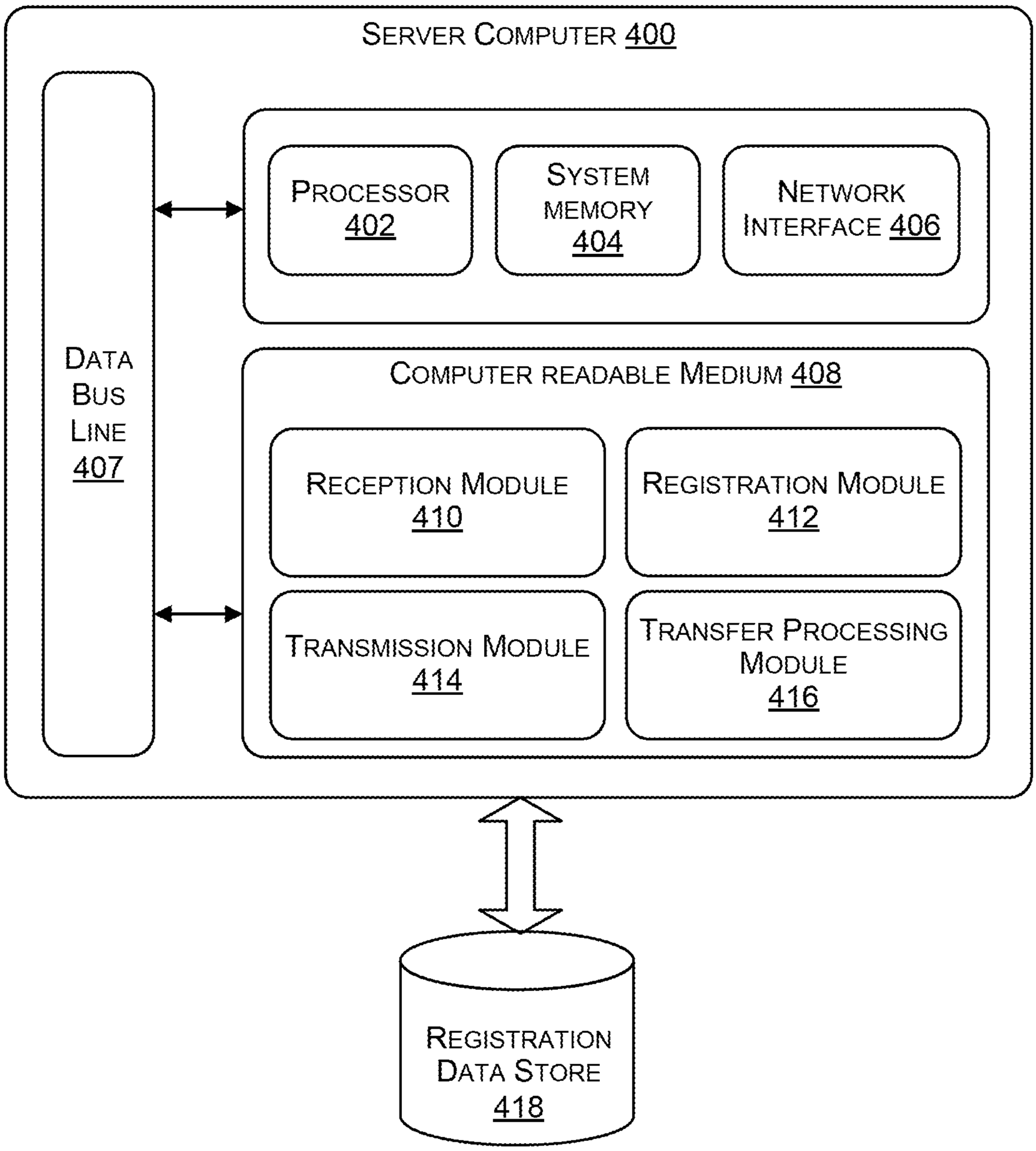
SERVER COMPUTER 400
DATA BUS LINE 407
PROCESSOR 402
SYSTEM MEMORY 404
NETWORK INTERFACE 406
COMPUTER READABLE MEDIUM 408
RECEPTION MODULE 410
REGISTRATION MODULE 412
TRANSMISSION MODULE 414
TRANSFER PROCESSING MODULE 416
REGISTRATION DATA STORE 418

FIG. 4

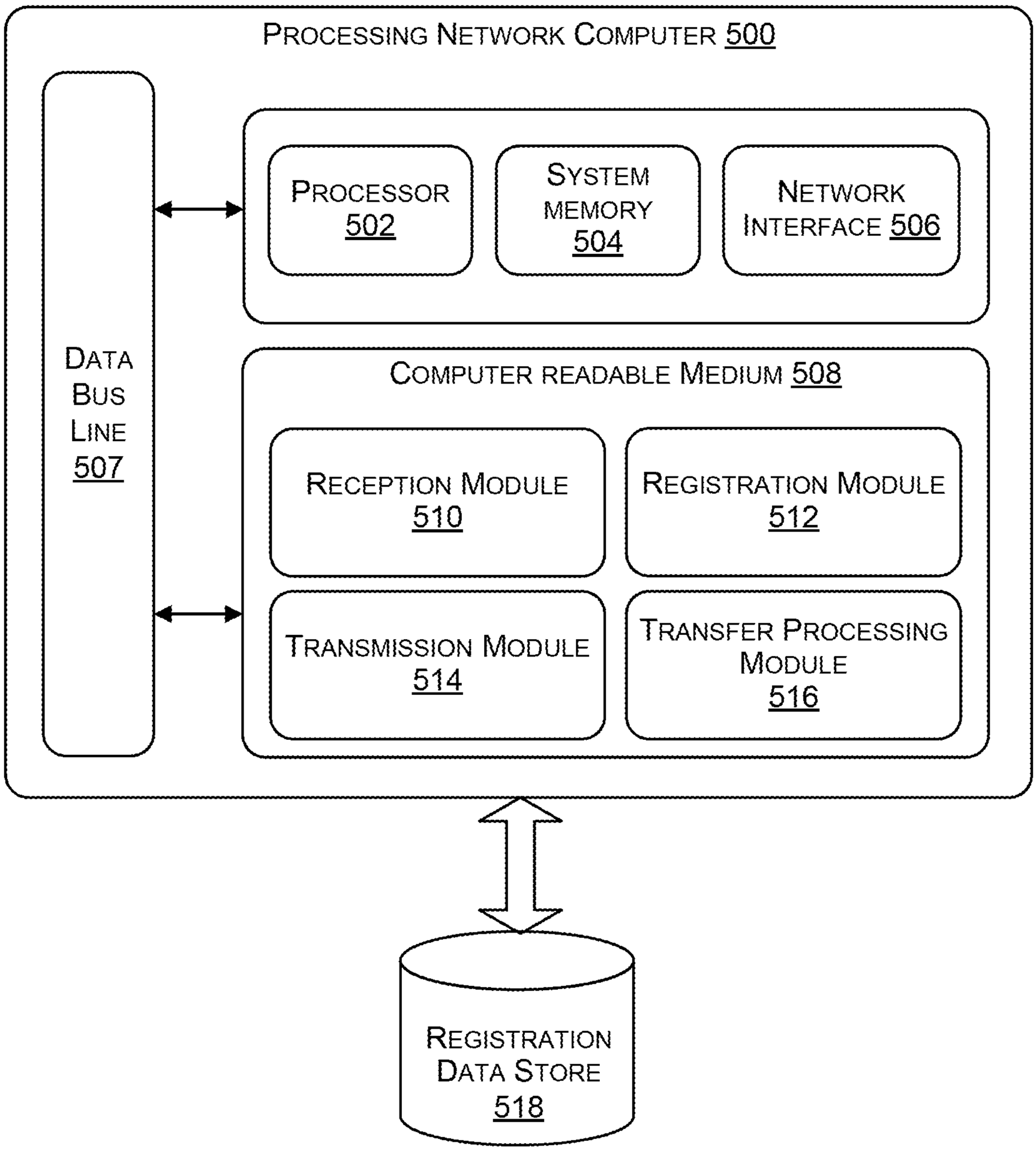
PROCESSING NETWORK COMPUTER 500
DATA BUS LINE 507
PROCESSOR 502
SYSTEM MEMORY 504
NETWORK INTERFACE 506
COMPUTER READABLE MEDIUM 508
RECEPTION MODULE 510
REGISTRATION MODULE 512
TRANSMISSION MODULE 514
TRANSFER PROCESSING MODULE 516
REGISTRATION DATA STORE 518

FIG. 5

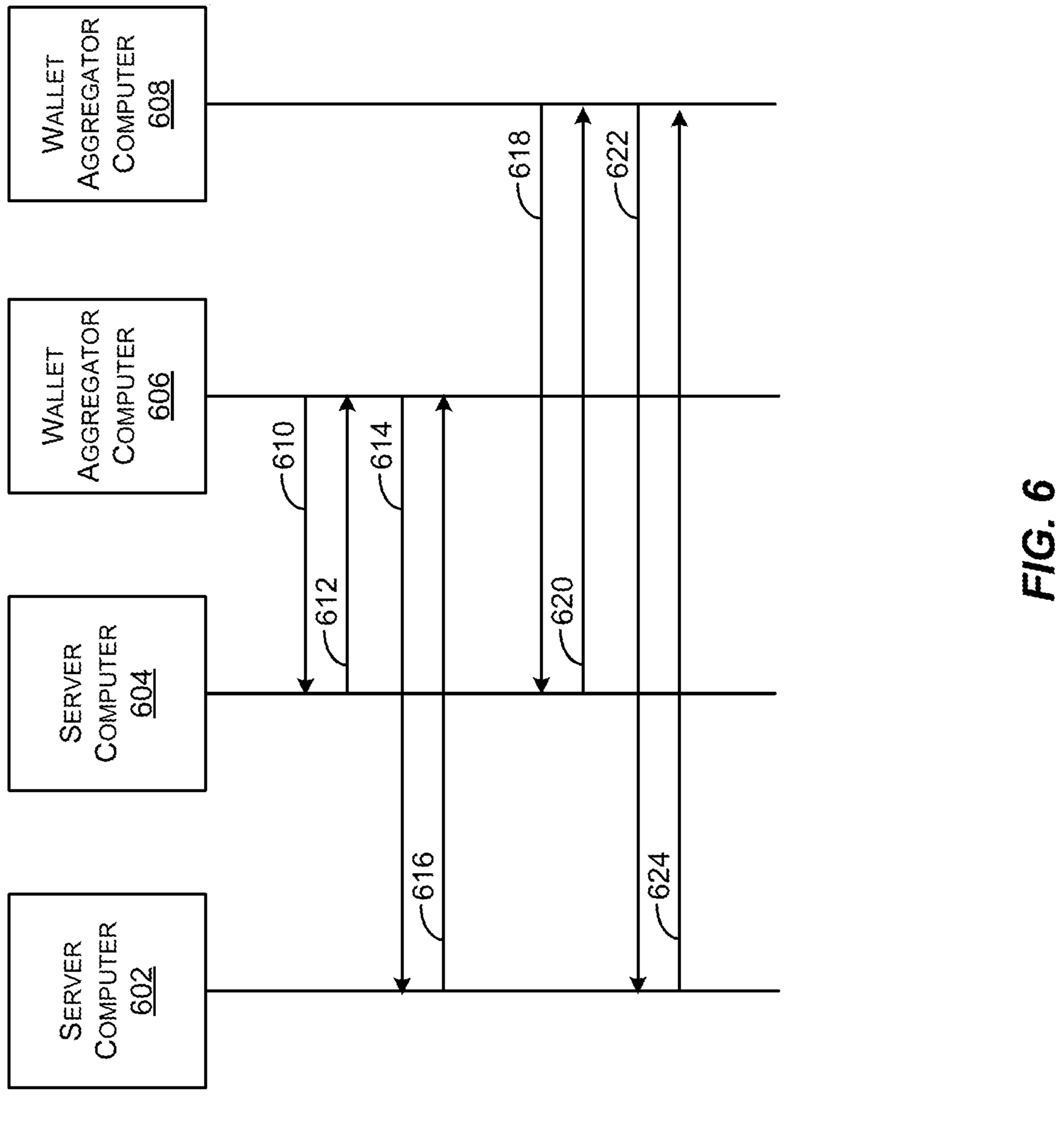
WALLET AGGREGATOR COMPUTER 608
WALLET AGGREGATOR COMPUTER 606
SERVER COMPUTER 604
SERVER COMPUTER 602
610
612
614
616
618
620
622
624
600

FIG. 6

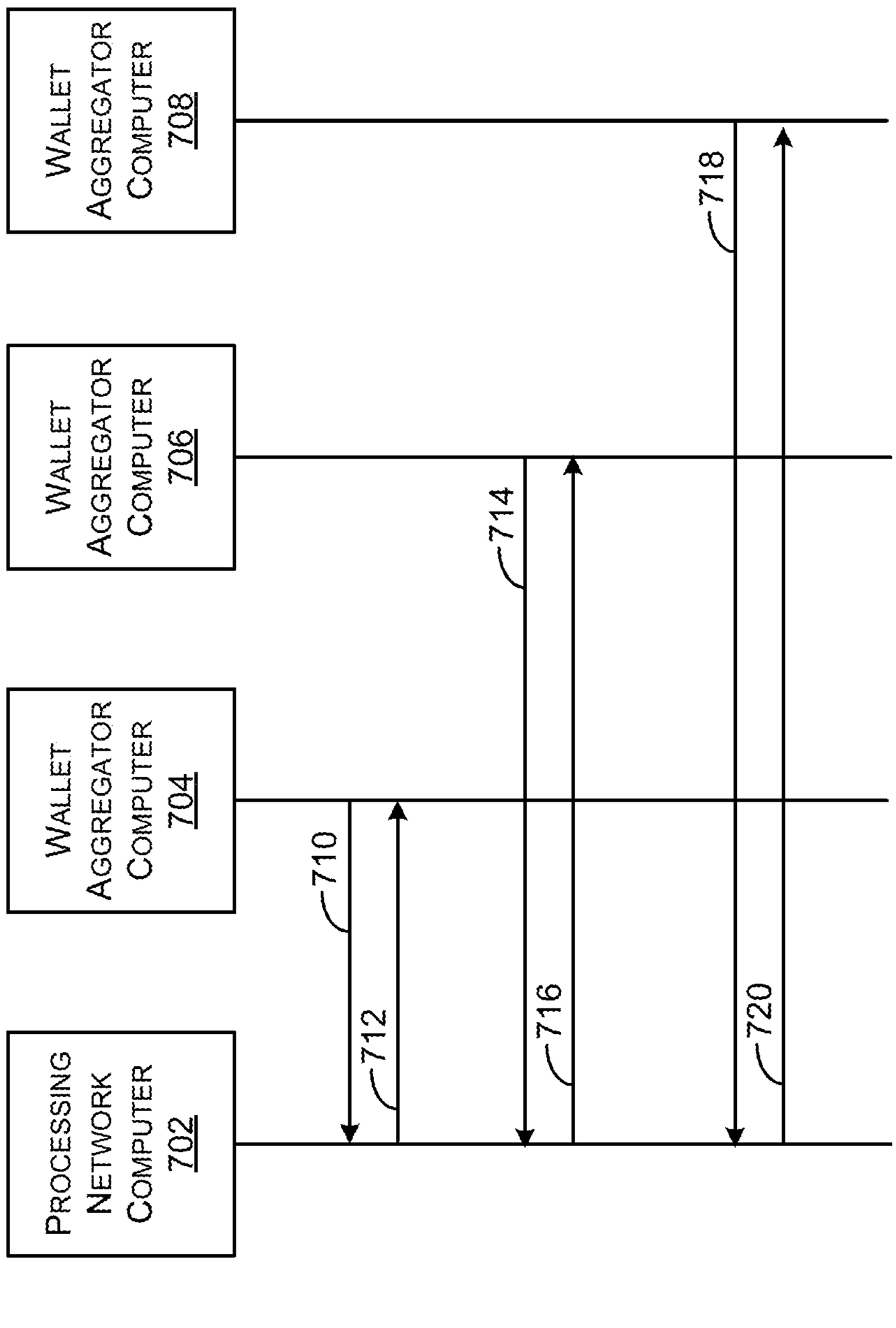
PROCESSING NETWORK COMPUTER 702
WALLET AGGREGATOR COMPUTER 704
WALLET AGGREGATOR COMPUTER 706
WALLET AGGREGATOR COMPUTER 708
710
712
714
716
718
720
700

FIG. 7